LG TOTAL HVAC SOLUTION PROVIDER

ENGINEERING PRODUCT DATA BOOK

MULTI V™ Indoor unit

(R410A)

0CVP0-04B(Replaces 0CVP0-04A)



LG Life's Good

P/No. : MFL55028429

MULTI V™ Indoor unit

- Introduction
- General Information
- Indoor Units
- Dip Switch & Group Control Setting

1. Preface

R410A Model

MULTI V™ is the most favored choice when there is a need for precise air conditioning of relatively big projects extending from Multi-Room structure to big commercial places. We have a big line up, that offers wider flexibility of model selection.

Equipped with inverter technology and long piping installation, the product matches well if one talk about optimum power consumption in high rise buildings. Add on capacity feature makes it easy to upgrade the existing capacity at any time.

With the growing concern about environment preservation, MULTI V™ comes with R410A refrigerant which is environment friendly and thus our MULTI V™ system is a high technology and environment friendly product.

Unique refrigerant flow and electronic circuit control gives this system an unique capability to work in extreme/abnormal working conditions making our customer feel great about their decision of selecting LG MULTI V™ as their first choice.

This publication provides a detailed and in depth information about the design and installation of MULTI V™ .

We hope that with this information you would become an expert of your MULTI V™ system.

LG Electronics Inc.

2. Step by Step MULTI V™ System Selection Process

(1) Calculate or obtain the maximum heat load for the area(s) to be air conditioned

(2) Decide the indoor unit specifications

Decide the outdoor unit specifications

Capacity coefficient factor

Decide the air velocity and temperature distributions

(3) Selection of refrigerant pipe joints and headers

(4) Selection of the control system

Control wiring method

Description of devices

(5) Electrical wiring

Electric characteristics

Field wiring

Caution

1. Air conditioners should not be installed in areas where corrosive gas such as acid gas or alkaline gas is produced.
2. If the outdoor unit is installed close to the sea shore, direct exposure to the sea breeze should be avoided and choose an outdoor unit with anti-corrosion treatment.

MULTI V™ Indoor unit

General Information

1. Model Names
2. External Appearance
3. Nomenclature
4. Indoor Unit Capacity Index
5. The amount of Additional Refrigerant according to Indoor Unit Type

1. Model Names

■ Standard Model

Category		Chassis Name	Capacity(Btu/h(kW))																
			5k (1.6)	7k (2.2)	9k (2.8)	12k (3.6)	15k (4.5)	18k (5.6)	21k (6.2)	24k (7.1)	28k (8.2)	30k (9.0)	36k (10.6)	42k (12.3)	48k (14.1)	54k (15.8)	60k (17.5)	76k (22.4)	96k (28.0)
Wall Mounted Unit	Standard	SB	O	●	●	●	●												
		SC						●		●									
		SV										O	O						
ARTCOOL	Mirror	SB	O	●	●	●	●												
		SC						●		●									
	Gallery	SF		●	●	●													
Ceiling Cassette	1 Way	TU		●	●	●													
		TT						●		●									
	2 Way	TL			●	●		●		●									
	4 Way	TR	O	●	●	●													
		TQ					●	●	O										
		TP								●	●	O							
		TN		O			O	O					●						
		TM								O				●	●	O			
Ceiling Concealed Duct	High Static	BG									●		●	●					
		BR													●	●			
		B8																●	●
	High Sensible	BG		O	O	O	O												
		BR						O		O	O								
		B8											O	O	O				
	Middle Static	M1		●	●	●	●	●		●									
		M2									●		●	●					
		M3													●	●			
	Low Static	L1	O	●	●														
		L2				●	●	●											
		L3							O	●									
	Built In (Low Static)	B3		●	●	●	●												
		B4						●		●									
Floor Standing	With Case	CE		O	●	●	●												
		CF						●		●									
	Without Case	CE		O	●	●	●												
		CF						●		●									
Console		QA		O	O	O	O												
Fresh Air Intake Unit		BR													O				
		B8																O	O

■ Compact Model

Category		Chassis Name	Capacity(Btu/h(kW))	
			9k(2.8)	15k(4.5)
Ceiling assette	4 Way	TR	O	O

❊ In matters of combination with Outdoor unit system, refer the PDB of that outdoor units.

❊ ▭ : can not be combined with Multi V III Solo system.

❊ O : can be combined with EHP(Multi V series) only.

❊ ● : can be combined with EHP(Multi V series) or GHP.

❊ This product contains Fluorinated Greenhouse Gases.(R410A)

2. External Appearance

■ Standard Model

Ceiling Cassette- 1Way

ARNU07GTU*4
ARNU09GTU*4
ARNU12GTU*4

ARNU18GTT*4
ARNU24GTT*4

* A:Basic, C:Plasma



Ceiling Cassette -2Way

ARNU09GTL*4 ARNU18GTL*4
ARNU12GTL*4 ARNU24GTL*4

* A:Basic, C:Plasma



Ceiling Cassette- 4Way

ARNU05GTR*4 ARNU24GTP*4
ARNU07GTR*4 ARNU28GTP*4
ARNU09GTR*4 ARNU30GTP*4
ARNU12GTR*4 ARNU36GTN*4
ARNU15GTQ*4 ARNU42GTM*4
ARNU18GTQ*4 ARNU48GTM*4
ARNU21GTQ*4 ARNU54GTM*4
ARNU07GTN*4 ARNU18GTN*4
ARNU15GTN*4 ARNU24GTM*4

* A:Basic, C:Plasma



Ceiling Concealed Duct - Low Static

ARNU05GL1G4 ARNU15GL2G4
ARNU07GL1G4 ARNU18GL2G4
ARNU09GL1G4 ARNU21GL3G4
ARNU12GL2G4 ARNU24GL3G4



Ceiling Concealed Duct – Built-in (Low Static)

ARNU07GB3G4 ARNU15GB3G4
ARNU09GB3G4 ARNU18GB4G4
ARNU12GB3G4 ARNU24GB4G4



Ceiling Concealed Duct – Middle Static

ARNU07GM1A4 ARNU28GM2A4
ARNU09GM1A4 ARNU36GM2A4
ARNU12GM1A4 ARNU42GM2A4
ARNU15GM1A4 ARNU48GM3A4
ARNU18GM1A4 ARNU54GM3A4
ARNU24GM1A4



Console

ARNU07GQAA4
ARNU09GQAA4
ARNU12GQAA4
ARNU15GQAA4



Ceiling Concealed Duct - High Static

ARNU28GBGA4
ARNU36GBGA4
ARNU42GBGA4
ARNU48GBRA4
ARNU54GBRA4
ARNU76GB8A4
ARNU96GB8A4



Ceiling Concealed Duct - High Sensible

ARNU07GBGA4 ARNU24GBRA4
ARNU09GBGA4 ARNU28GBRA4
ARNU12GBGA4 ARNU36GB8A4
ARNU15GBGA4 ARNU42GB8A4
ARNU18GBRA4 ARNU48GB8A4



Floor Standing
With case

ARNU07GCEA4 ARNU15GCEA4
ARNU09GCEA4 ARNU18GCFA4
ARNU12GCEA4 ARNU24GCFA4

Without case

ARNU07GCEU4 ARNU15GCEU4
ARNU09GCEU4 ARNU18GCFU4
ARNU12GCEU4 ARNU24GCFU4



Wall mounted unit (Standard)

ARNU05GSB*4 ARNU15GSB*4
ARNU07GSB*4 ARNU18GSC*4
ARNU09GSB*4 ARNU24GSC*4
ARNU12GSB*4 ARNU30GSVA4
ARNU36GSVA4

* A:Basic, L:Plasma



ARTCOOL (Mirror)

ARNU05GSB*4 ARNU15GSB*4
ARNU07GSB*4 ARNU18GSC*4
ARNU09GSB*4 ARNU24GSC*4
ARNU12GSB*4

* R:Mirror, W:White, V:Silver



ARTCOOL (Gallery)

ARNU07GSF14
ARNU09GSF14
ARNU12GSF14



Fresh Air Intake Unit

ARNU48GBRZ4
ARNU76GB8Z4
ARNU96GB8Z4



❉ In matters of combination with Outdoor unit system, refer the PDB of that outdoor units.
❉ Indoor Units bigger than 54k and Fresh Air Intake Units can not be combined with Multi V III Solo system.

2. External Appearance

■ Compact Model

Ceiling Cassette- 4Way

ARNU09GTR*4 * E : Basic, F : Plasma
ARNU15GTR*4 * A : Basic, C : Plasma



❉ In matters of combination with Outdoor unit system, refer the PDB of that outdoor units.
❉ Indoor Units bigger than 54k and Fresh Air Intake Units can not be combined with Multi V III Solo system.

3. Nomenclature

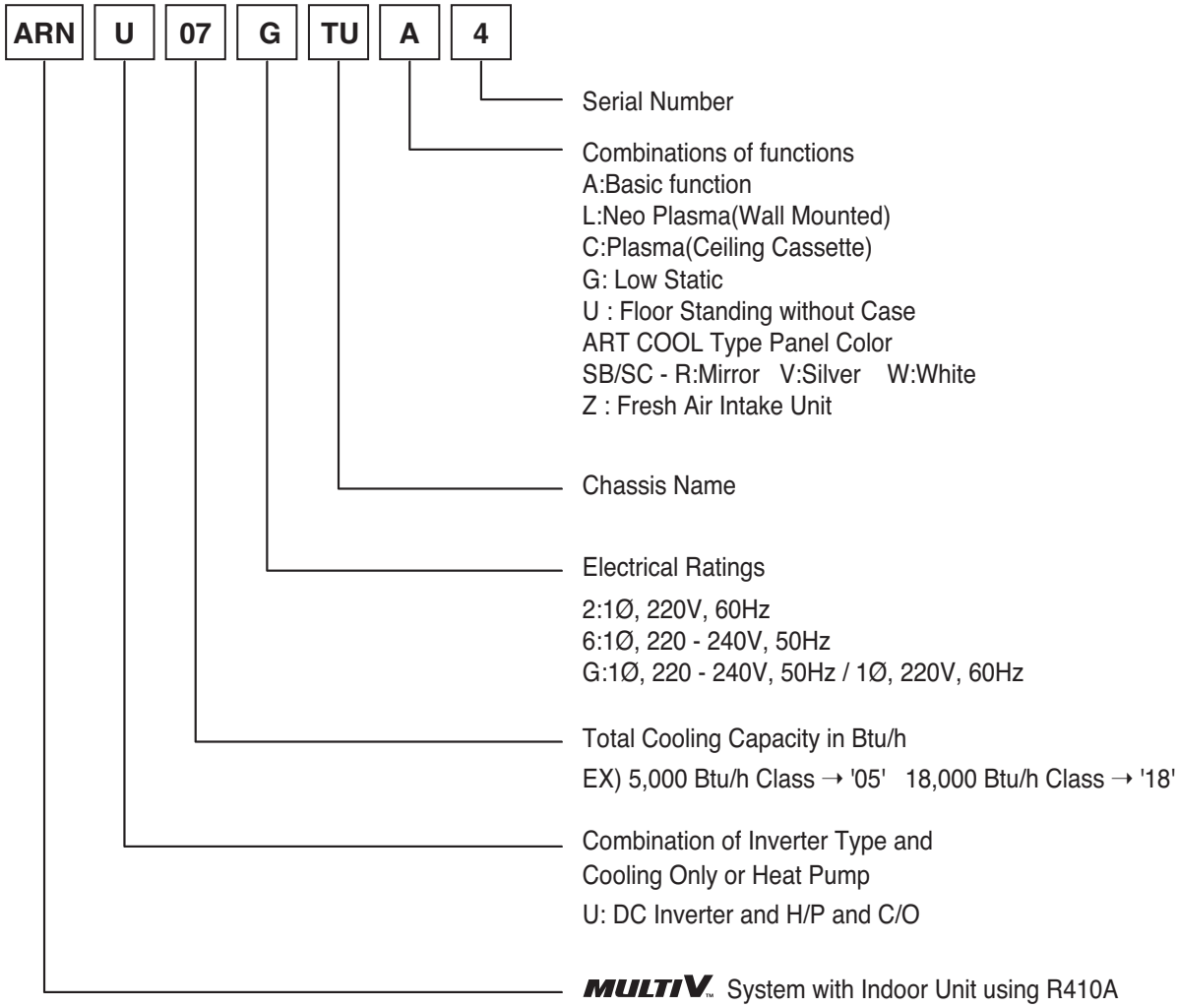

4. Indoor Unit Capacity Index

Indoor unit capacity index

Unit Capacity (Btu/h)	5k	7k	9k	12k	15k	18k	21k	24k	28k	30k	36k	42k	48k	54k	60k	76k	96k
Capacity Index	1.6	2.2	2.8	3.6	4.5	5.6	6.2	7.1	8.2	9.0	10.6	12.3	14.1	15.8	17.5	22.4	28.0

❉ Capacity Index is same as the capacity(kW).
❉ In matters of combination with Outdoor unit system, refer the PDB of that outdoor units.
❉ Indoor Units bigger than 54k and Fresh Air Intake Units can not be combined with Multi V III Solo system.

5. The amount of Additional Refrigerant according to Indoor Unit Type

Calculation of the amount of additional refrigerant

The calculation of the additional charge should take into account the length of pipe and CF(correction Factor) value of indoor unit.

Additional charge(kg)	=	Total liquid pipe :Ø25.4 mm	× 0.480(kg/m)
	+	Total liquid pipe :Ø22.2 mm	× 0.354(kg/m)
	+	Total liquid pipe :Ø19.05 mm	× 0.266(kg/m)
	+	Total liquid pipe :Ø15.88 mm	× 0.173(kg/m)
	+	Total liquid pipe :Ø12.7 mm	× 0.118(kg/m)
	+	Total liquid pipe :Ø9.52 mm	× 0.061(kg/m)
	+	Total liquid pipe :Ø6.35 mm	× 0.022(kg/m)
	+	CF value of indoor unit	

Additional refrigerant table of indoor unit

Capacity (kW) / Model Name	5 (1.6)	7 (2.2)	9 (2.8)	12 (3.6)	15 (4.5)	18 (5.6)	21 (6.2)	24 (7.1)	28 (8.2)	30 (8.8)	36 (10.6)	42 (12.3)	48 (14.1)	54 (17.0)	60 (17.5)	76 (22.4)	96 (28.0)
ARNU**GTT(TU)*2(4)		0.20	0.20	0.20		0.29		0.29									
ARNU**GTL*2(4)			0.16	0.16		0.16		0.16									
ARNU**GTR(TQ, TP, TN, TM)*2 ARNU**GTR(TQ)*4	0.18	0.18	0.25	0.25	0.32	0.32	0.32	0.48	0.48		0.64	0.64	0.64				
ARNU**GTP*4								0.32	0.32	0.32							
ARNU**GTN*4		0.40	0.40	0.40	0.40	0.40		0.40			0.40						
ARNU**GTM*4								0.49	0.49		0.49	0.49	0.49	0.49			
ARNU**GBH(B8)*2(4)		0.26	0.26	0.26	0.26	0.26		0.26			1.00	1.00	1.00		1.00	1.00	1.00
ARNU**GBG*2(4)		0.44	0.44	0.44	0.44	0.44		0.44	0.44		0.44	0.44					
ARNU**GBR*2(4)						0.62		0.62	0.62		0.62	0.62	0.62	0.62			
ARNU**GB1(B2)G2 ARNU**GB3(B4)G2(4)		0.17	0.17	0.17	0.17	0.37		0.37									
ARNU**GL1(L2,L3)G2(4)	0.14	0.14	0.14	0.19	0.19	0.19	0.25	0.25									
ARNU**GM1(M2, M3)A4		0.24	0.24	0.24	0.24	0.24		0.36	0.35		0.35	0.52	0.61	0.61			
ARNU**GSE(S5, S8)2 ARNU**GSB(SC)*2(4)	0.24	0.24	0.24	0.24	0.24	0.28		0.28		0.46	0.46						
ARNU**GSF*2(4)		0.10	0.10	0.10													
A(U)RNU**GVE(VJ,VK)*2			0.10	0.10		0.35		0.35			0.79		0.79				
ARNU**GCE(CF)*2(4)		0.17	0.17	0.17	0.17	0.37		0.37									
ARNU**GQA*2		0.17	0.17	0.17	0.17												
ARNH**GK2(K3)A2												0.80	0.80			1.00	1.60
LZ-H***GX**				0.20		0.20		0.20									

MULTI V™ Indoor unit

■ Standard Model

- Ceiling Cassette 1-Way
- Ceiling Cassette 2-Way
- Ceiling Cassette 4-way
- Ceiling Cassette 4-way(2)
- Ceiling Concealed Duct(High Static)
- Ceiling Concealed Duct(High Sensible)
- Ceiling Concealed Duct(Middle Static)
- Ceiling Concealed Duct(Low Static)
- Ceiling Concealed Duct(Built in (Low Static))
- Floor Standing
- Fresh Air Intake Unit
- Wall mounted unit (Standard)
- ARTCOOL (Mirror)
- ARTCOOL (Gallery)
- Console

MULTI V™ Indoor unit

Ceiling Cassette 1-Way

1. List of functions

2. Specifications

3. Dimensions

4. Piping Diagrams

5. Wiring Diagrams

6. Capacity Tables

7. Air Velocity and Temperature Distribution

8. Electric Characteristics

9. Sound Levels

10. Installation

11. Accessories

1. List of functions

Category	Function	ARNU07GTU*4, ARNU09GTU*4, ARNU12GTU*4 ARNU18GTT*4, ARNU24GTT*4
Air flow	Air supply outlet	1
	Airflow direction control(left & right)	-
	Airflow direction control(up & down)	Auto
	Auto swing(left & right)	-
	Auto swing(up & down)	O
	Airflow steps(fan/cool/heat)	4 / 5 / 4
	Chaos swing	X
	Chaos wind(auto wind)	O
	Jet cool(Power wind)	O
	Swirl wind	-
Air purifying	Deodorizing filter	X
	Plasma air purifier	O(C4 Model only), X(A4 Model)
	Prefilter(washable / anti-fungus)	O
Installation	Drain pump	O
	E.S.P. control	X
	Electric heater(operation)	X
	High ceiling operation	O
Reliability	Hot start	O
	Self diagnosis	O
	Soft dry operation	O
Convenience	Auto changeover	O(Heat recovery)
	Auto cleaning	X
	Auto operation(artificial intelligence)	O(Heat pump or Cooling only)
	Auto restart operation	O
	Child lock	O
	Forced operation	O
	Group control	O
	Sleep mode	O
	Timer(on/off)	O
	Timer(weekly)	O
	Two thermistor control	O
	External On/Off	O
Individual control	Wide wired remote controller (RS2)	PQRCVSL0/PQRCVSL0QW
	Wide wired remote controller (RS2 Plus)	PREMTB001/PREMTBB01
	Premium wired remote controller	PREMTA000/PREMTA000A/PREMTA000B
	Simple wired remote controller	PQRCVCL0Q(W)
	Wired remote controller(for hotel use)	PQRCHCA0Q(W)
	Wireless LCD remote control	PQWRH(C)Q0FDB
Special function kit	Zone control	-
	CTIE	-
	Electro thermostat	-
	Remote temperature sensor	PQRSTA0
	Group control wire	PZCWRCG3
	Dry contact	PDRYCB000/PDRYCB100/PDRYCB300/PDRYCB400/PDRYCB500

O : Applied X : Not applied – : No relation

Option : Model name & price are different according to options, and assembled in factory with main unit.

Accessory : Installed at field, ordered and purchased separately by the corresponding model name, supplied with separate package.

* Some functions can be limited by remote controller.

2. Specifications

* Model Name
A:Basic, C:Plasma

Type			1Way Ceiling Cassette		
Model		Unit	ARNU07GTU*4	ARNU09GTU*4	ARNU12GTU*4
Cooling Capacity		kW	2.2	2.8	3.6
		kcal/h	1,900	2,400	3,100
		Btu/h	7,500	9,600	12,300
Heating Capacity		kW	2.5	3.2	4.0
		kcal/h	2,200	2,800	3,400
		Btu/h	8,500	10,900	13,600
Casing			Galvanized Steel Plate	Galvanized Steel Plate	Galvanized Steel Plate
Dimensions (WxHxD)	Body	mm	860 x 132 x 450	860 x 132 x 450	860 x 132 x 450
		inch	33-27/32 x 5-3/16 x 17-23/32	33-27/32 x 5-3/16 x 17-23/32	33-27/32 x 5-3/16 x 17-23/32
	Front Panel	mm	1,100 x 34 x 500	1,100 x 34 x 500	1,100 x 34 x 500
		inch	43-5/16 x 1-11/32 x 19-11/16	43-5/16 x 1-11/32 x 19-11/16	43-5/16 x 1-11/32 x 19-11/16
Coil	Rows x Columns x FPI		2 x 12 x 18	2 x 12 x 18	2 x 12 x 18
	Face Area	m^2	0.16	0.16	0.16
Fan	Type		Cross Flow Fan	Cross Flow Fan	Cross Flow Fan
	Motor Output x Number	W	30	30	30
	Running Current	A	0.18	0.18	0.18
	Air Flow Rate(H / M / L)	CMM	8.2 / 7.3 / 6.4	9.2 / 8.6 / 8.2	10 / 9.2 / 8.2
		cfm	289.5 / 257.7 / 225.9	324.7 / 303.6 / 289.5	353 / 324.8 / 289.5
	Drive		Direct	Direct	Direct
	Motor type		BLDC	BLDC	BLDC
Temperature Control			Microprocessor, Thermostat for cooling and heating	Microprocessor, Thermostat for cooling and heating	Microprocessor, Thermostat for cooling and heating
Sound Absorbing Thermal Insulation Material			Foamed polystrene	Foamed polystrene	Foamed polystrene
Safety Device			Fuse	Fuse	Fuse
Pipe Connections	Liquid Side	mm(inch)	Ø6.35(1/4)	Ø6.35(1/4)	Ø6.35(1/4)
	Gas Side	mm(inch)	Ø12.7(1/2)	Ø12.7(1/2)	Ø12.7(1/2)
	Drain Pipe(Internal Dia.)	mm(inch)	25(1)	25(1)	25(1)
Net Weight	Body	kg(lbs)	13.6(30.0)	13.6(30.0)	13.6(30.0)
Noise Level(Sound Press, 1.5m, H / M / L)		dB(A)	32 / 29 / 25	35 / 34 / 32	38 / 35 / 32
Power Supply		Ø, V, Hz	1, 220-240, 50	1, 220-240, 50	1, 220-240, 50
			1, 220, 60	1, 220, 60	1, 220, 60
Refrigerant Control			EEV	EEV	EEV
Transmission cable			CVV-SB 1.0~1.5 x 2C	CVV-SB 1.0~1.5 x 2C	CVV-SB 1.0~1.5 x 2C
Panel Color			Noble White	Noble White	Noble White
Panel Name(Accessory)			PT-UUC(Grill), PT-UUD(Panel)		

Notes:

1. Capacities are based on the following conditions:
   - Cooling
     - Indoor temp. 27°C[80.6°F]DB/ 19°C[66.2°F]WB
     - Outdoor temp. 35°C[95°F]DB/ 24°C[75.2°F]WB
     - Interconnecting Piping Length 7.5m
     - Level Difference of Zero
   - Heating
     - Indoor temp. 20°C[68°F]DB/ 15°C[59°F]WB
     - Outdoor temp. 7°C[44.6°F]DB/ 6°C[42.8°F]WB
     - Interconnecting Piping Length 7.5m
     - Level Difference of Zero
2. Capacities are Net Capacities
3. Due to our policy of innovation some specifications may be changed without prior notification
4. Wiring cable size must comply with the applicable local and national codes. And “Electric characteristics” chapter should be considered for electrical work and design. Especially the power cable and circuit breaker should be selected in accordance with that.
5. EEV: Electronic Expansion Valve
6. Anechoic chamber conversion value is measured at 1.5 m downward from unit centre.
   The values depends on the ambient conditions and values are normally higher in actual operation.

Conversion Formula
kcal/h= kW x 860
Btu/h = kW x 3412
cfm = m^3/min x 35.3
l/s = CMM x 1000/60

2. Specifications

* Model Name
A:Basic, C:Plasma

Type			1Way Ceiling Cassette	
Model		Unit	ARNU18GTT*4	ARNU24GTT*4
Cooling Capacity		kW	5.6	7.1
		kcal/h	4,800	6,100
		Btu/h	19,100	24,200
Heating Capacity		kW	6.3	7.1
		kcal/h	5,400	6,100
		Btu/h	21,500	24,200
Casing			Galvanized Steel Plate	Galvanized Steel Plate
Dimensions (WxHxD)	Body	mm	1,180 x 132 x 450	1,180 x 132 x 450
		inch	46-15/32 x 5-3/16 x 17-23/32	46-15/32 x 5-3/16 x 17-23/32
	Front Panel	mm	1,420 x 34 x 500	1,420 x 34 x 500
		inch	55-29/32 x 1-11/32 x 19-11/16	55-29/32 x 1-11/32 x 19-11/16
Coil	Rows x Columns x FPI		2 x 12 x 18	2 x 12 x 18
	Face Area	m^2	0.24	0.24
Fan	Type		Cross Flow Fan	Cross Flow Fan
	Motor Output x Number	W	30	30
	Running Current	A	0.30	0.30
	Air Flow Rate(H / M / L)	CMM	13.3 / 12.1 / 10.9	14.6 / 13.3 / 11.5
		cfm	515.4 / 427.1 / 384.8	575.4 / 469.5 / 406
	Drive		Direct	Direct
	Motor type		BLDC	BLDC
Temperature Control			Microprocessor, Thermostat for cooling and heating	Microprocessor, Thermostat for cooling and heating
Sound Absorbing Thermal Insulation Material			Foamed polystrene	Foamed polystrene
Safety Device			Fuse	Fuse
Pipe Connections	Liquid Side	mm(inch)	Ø6.35(1/4)	Ø9.52(3/8)
	Gas Side	mm(inch)	Ø12.7(1/2)	Ø15.88(5/8)
	Drain Pipe(Internal Dia.)	mm(inch)	25(1)	25(1)
Net Weight	Body	kg(lbs)	15.6(34.4)	15.6(34.4)
Noise Level(Sound Press, 1.5m, H / M / L)		dB(A)	40 / 37 / 35	43 / 40 / 36
Power Supply		Ø, V, Hz	1, 220-240, 50	1, 220-240, 50
			1, 220, 60	1, 220, 60
Refrigerant Control			EEV	EEV
Transmission cable			CVV-SB 1.0~1.5 x 2C	CVV-SB 1.0~1.5 x 2C
Panel Color			Noble White	Noble White
Panel Name(Accessory)			PT-UTC(Grill), PT-UTD(Panel)	

Notes:

1. Capacities are based on the following conditions:
   - Cooling
     - Indoor temp. 27°C[80.6°F]DB/ 19°C[66.2°F]WB
     - Outdoor temp. 35°C[95°F]DB/ 24°C[75.2°F]WB
     - Interconnecting Piping Length 7.5m
     - Level Difference of Zero
   - Heating
     - Indoor temp. 20°C[68°F]DB/ 15°C[59°F]WB
     - Outdoor temp. 7°C[44.6°F]DB/ 6°C[42.8°F]WB
     - Interconnecting Piping Length 7.5m
     - Level Difference of Zero
2. Capacities are Net Capacities
3. Due to our policy of innovation some specifications may be changed without prior notification
4. Wiring cable size must comply with the applicable local and national codes. And “Electric characteristics” chapter should be considered for electrical work and design. Especially the power cable and circuit breaker should be selected in accordance with that.
5. EEV: Electronic Expansion Valve
6. Anechoic chamber conversion value is measured at 1.5 m downward from unit centre.
   The values depends on the ambient conditions and values are normally higher in actual operation.

Conversion Formula
kcal/h= kW x 860
Btu/h = kW x 3412
cfm = m^3/min x 35.3
l/s = CMM x 1000/60

Ceiling Cassette 1-way

ARNU07GTU*4
ARNU09GTU*4
ARNU12GTU*4

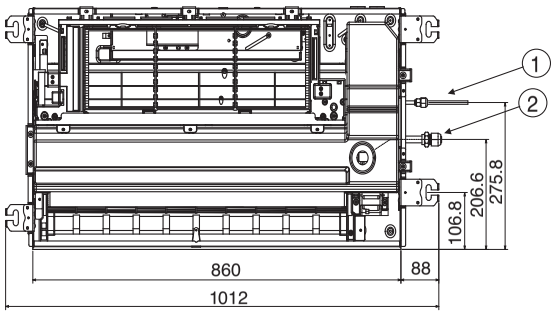

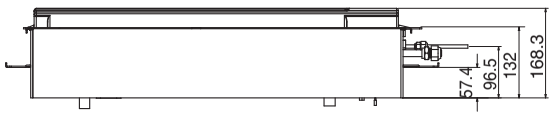

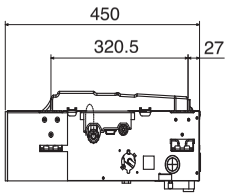

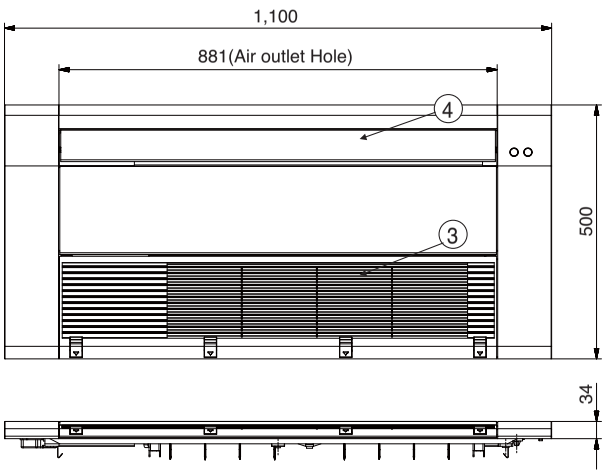

(Panel Name: PT-UUC)

(unit : mm)

Number	Name	Description
1	Liquid pipe connection	Unit size(7k, 9k, 12k):ø6.35
2	Gas pipe connection	Unit size(7k, 9k, 12k):ø12.7
3	Air suction grill	
4	Air discharge grill	

▣ Note

1. Unit should be installed in compliance with the installation manual in the product box.
2. Unit shall be grounded in accordance with the local regulations or applicable national codes.

Ceiling Cassette 1-way
ARNU07GTU*4 ARNU09GTU*4 ARNU12GTU*4

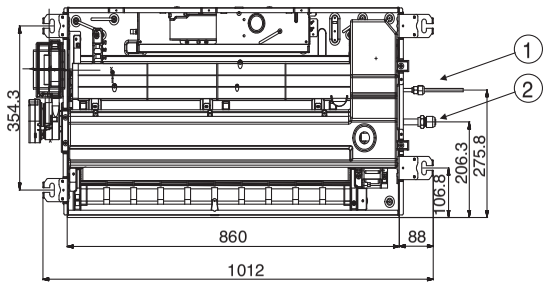

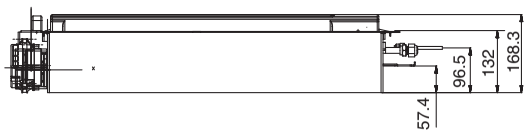

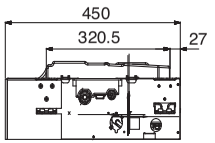

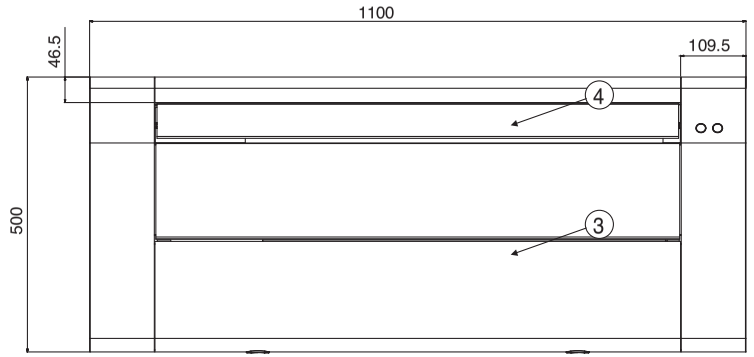

(Panel Name: PT-UUD)

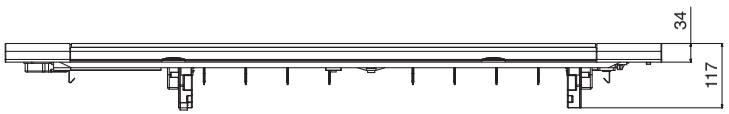

(unit : mm)

Number	Name	Descripition
1	Liquid pipe connection	Unit size(7k, 9k, 12k):ø6.35
2	Gas pipe connection	Unit size(7k, 9k, 12k):ø12.7
3	Air suction grill	
4	Air discharge grill	

▣ Note

1. Unit should be installed in compliance with the installation manual in the product box.
2. Unit shall be grounded in accordance with the local regulations or applicable national codes.

LG Electronics

CHASSIS CODE: TU

Ceiling Cassette 1-way

ARNU18GTT*4
ARNU24GTT*4

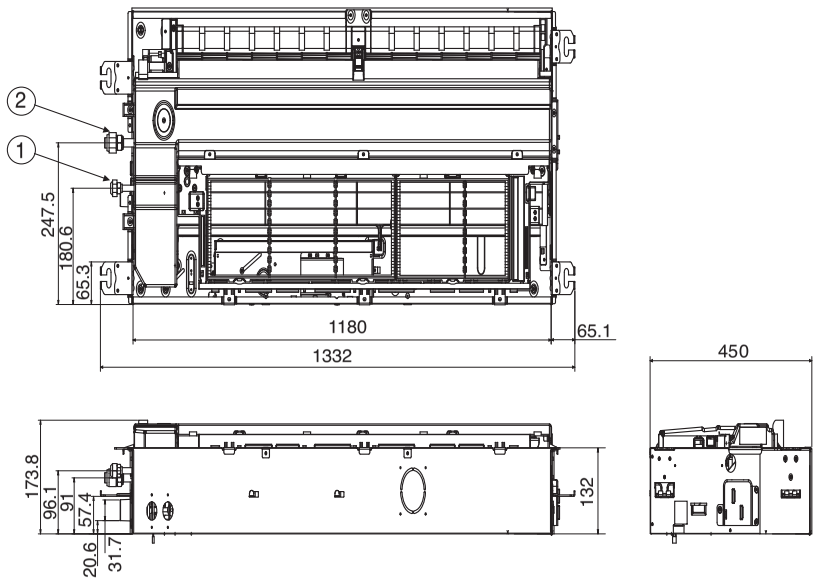

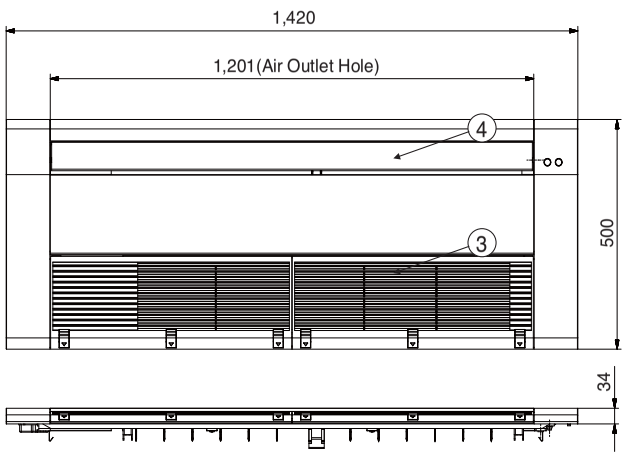

(Panel Name: PT-UTC)

(unit : mm)

Number	Name	Descripition
1	Liquid pipe connection	Unit size(18k):ø6.35, (24k):ø9.52
2	Gas pipe connection	Unit size(18k):ø12.7, (24k):ø15.88
3	Air suction grill	
4	Air discharge grill	

▣ Note

1. Unit should be installed in compliance with the installation manual in the product box.
2. Unit shall be grounded in accordance with the local regulations or applicable national codes.

LG Electronics

CHASSIS CODE: TT

Ceiling Cassette 1-way
ARNU18GTT*4 ARNU24GTT*4

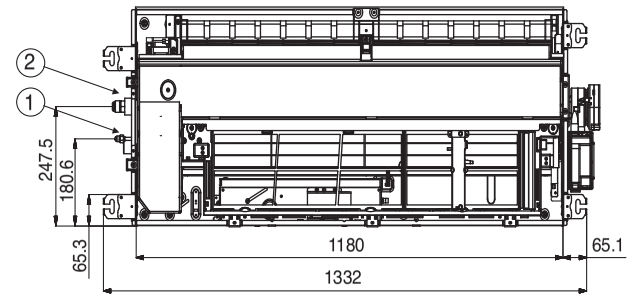

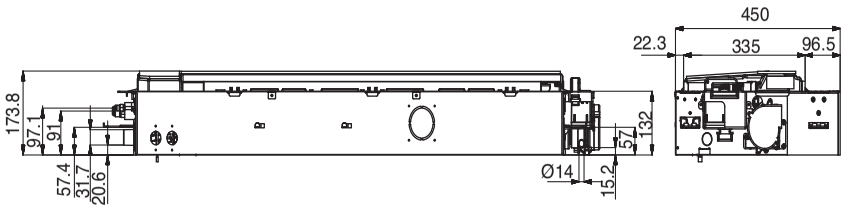

(Panel Name: PT-UTD)

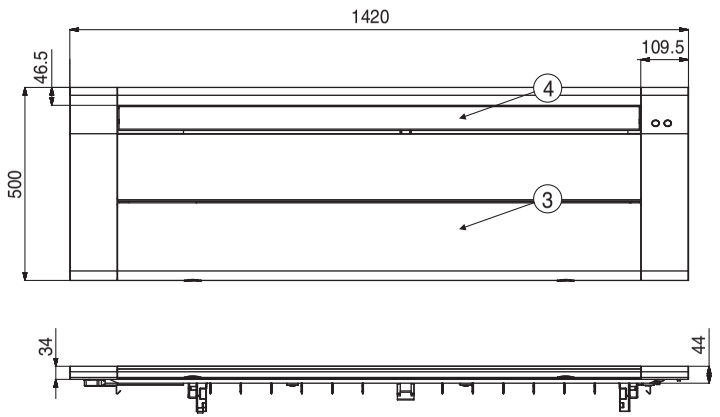

(unit : mm)

Number	Name	Descripition
1	Liquid pipe connection	Unit size(18k):ø6.35, (24k):ø9.52
2	Gas pipe connection	Unit size(18k):ø12.7, (24k):ø15.88
3	Air suction grill	
4	Air discharge grill	

▣ Note

1. Unit should be installed in compliance with the installation manual in the product box.
2. Unit shall be grounded in accordance with the local regulations or applicable national codes.

LG Electronics

CHASSIS CODE: TT

4. Piping Diagrams

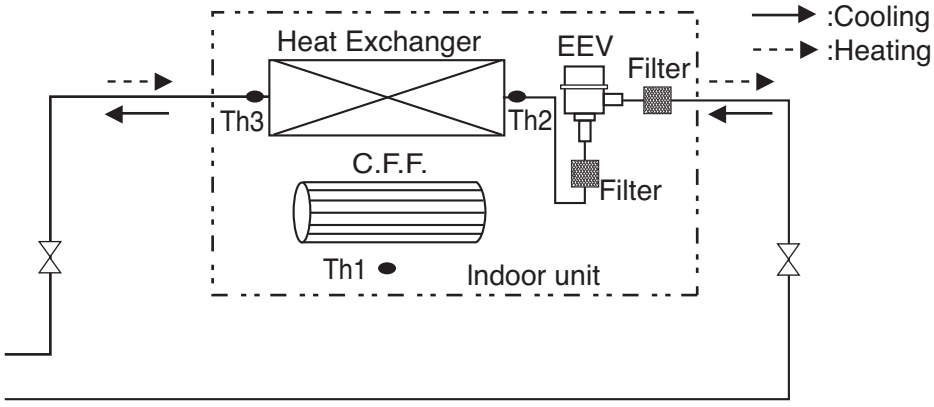

Refrigerant pipe connection port diameter

[Unit: mm(inch)]

Model	Gas	Liquid
ARNU07GTU*4	Ø12.7(1/2)	Ø6.35(1/4)
ARNU09GTU*4		
ARNU12GTU*4		
ARNU18GTT*4		
ARNU24GTT*4	Ø15.88(5/8)	Ø9.52(3/8)

LOC.	Description
Th1	Room thermistor
Th2	Pipe in thermistor
Th3	Pipe out thermistor

5. Wiring Diagrams

TU, TT Chassis

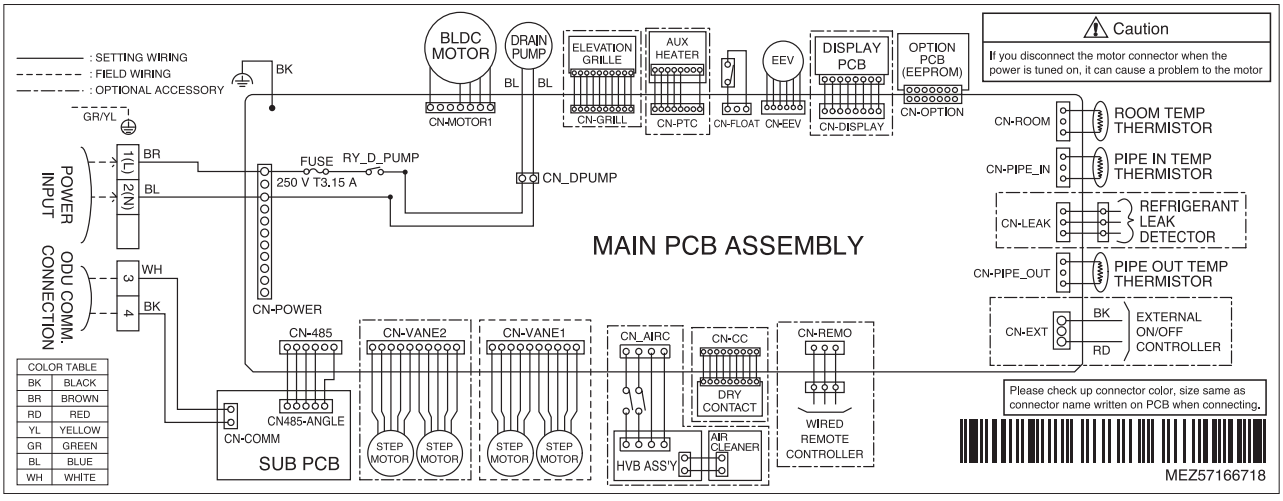

CONNECTOR NUMBER	LOCATION POINT	FUNCTION
CN-MOTOR1	Fan motor output	Motor output of BLDC
CN_DPUMP	Drain pump output	AC output for drain pump
CN-GRILL	Elevation grill	Elevation grill line
CN-PTC	Aux heater	Aux heater line
CN-LEAK	Refrigerant leak detector	Refrigerant leak detector line
CN-AIRC	Air cleaner	Air cleaner line
CN-DISPLAY	Display	Display of indoor status
CN-OPTION	Option pwb.	Communication between main and option
CN-EEV	EEV Output	EEV Control output
CN-FLOAT	Float switch input	Float switch sensing
CN-ROOM	Room sensor	Room air thermistor
CN-PIPE_IN	Suction pipe sensor	Pipe in thermistor
CN-PIPE_OUT	Discharge pipe sensor	Pipe out thermistor
CN-REMO	Remote controller	Remote control line
CN-CC	Dry contact	Dry contact line
CN-COMM	Communication	Communication between indoor and outdoor
CN-VANE1	Step motor	Step motor output
CN-VANE2	Step motor	Step motor output
CN-485	Communication	Connection between indoor and outdoor
CN-EXT	External On/Off	External On/Off signal input

Dip Switch Setting		Off	On	Remarks
SW3	GROUP	Master	Slave	Group Control setting using Wired Remote Controller
SW4	DRY CONTACT	Variable	Auto	Old Dry Contact Mode Setting 1. Variable : Auto/Manual Mode can be chosen by Wide wired remote controller or Wireless remote controller (When shipped from Factory → Manual Mode) 2. Auto : For Dry Contact, it is always Auto mode.
SW5	EXTRA 1	Off	On	1. Duct model -. OFF : Default(not operate continuosly) -. ON : Fan operate continuosly 2. Cassette Model : No Function 3. Ceiling Suspended Model -. OFF : Ceiling(default) -. ON : Floor

⚠ CAUTION

For Multi V Model, Dip Switch 1,2,6,7,8 must be set OFF
That dip switch is used for the other model.

6. Capacity Tables

6.1 Cooling Capacity

Cooling capacity

Capacity Index	Outdoor air temp. (DB, °C)	Indoor air temp. (DB/WB, °C)													
		20		23		26		27		28		30		32	
		14		16		18		19		20		22		24	
		TC	SHC	TC	SHC	TC	SHC	TC	SHC	TC	SHC	TC	SHC	TC	SHC
		kW	kW	kW	kW	kW	kW	kW	kW	kW	kW	kW	kW	kW	kW
2.2	10	1.5	1.3	1.8	1.4	2.0	1.6	2.2	1.6	2.4	1.7	2.6	1.7	2.9	1.7
	12	1.5	1.3	1.8	1.4	2.0	1.6	2.2	1.6	2.4	1.7	2.6	1.7	2.9	1.7
	14	1.5	1.3	1.8	1.4	2.0	1.6	2.2	1.6	2.4	1.7	2.6	1.7	2.8	1.7
	16	1.5	1.3	1.8	1.4	2.0	1.6	2.2	1.6	2.4	1.7	2.6	1.7	2.8	1.6
	18	1.5	1.3	1.8	1.4	2.0	1.6	2.2	1.6	2.4	1.7	2.6	1.7	2.7	1.6
	20	1.5	1.3	1.8	1.4	2.0	1.6	2.2	1.6	2.4	1.7	2.6	1.7	2.7	1.6
	21	1.5	1.3	1.8	1.4	2.0	1.6	2.2	1.6	2.4	1.7	2.6	1.7	2.7	1.6
	23	1.5	1.3	1.8	1.4	2.0	1.6	2.2	1.6	2.4	1.7	2.6	1.7	2.6	1.6
	25	1.5	1.3	1.8	1.4	2.0	1.6	2.2	1.6	2.4	1.7	2.6	1.7	2.6	1.5
	27	1.5	1.3	1.8	1.4	2.0	1.6	2.2	1.6	2.4	1.7	2.5	1.7	2.6	1.5
	29	1.5	1.3	1.8	1.4	2.0	1.6	2.2	1.6	2.4	1.7	2.5	1.6	2.5	1.5
	31	1.5	1.3	1.8	1.4	2.0	1.6	2.2	1.6	2.4	1.7	2.5	1.6	2.5	1.5
	33	1.5	1.3	1.8	1.4	2.0	1.6	2.2	1.6	2.4	1.7	2.4	1.6	2.4	1.4
	35	1.5	1.3	1.8	1.4	2.0	1.6	2.2	1.6	2.4	1.7	2.4	1.6	2.4	1.4
	37	1.5	1.3	1.8	1.4	2.0	1.6	2.2	1.6	2.3	1.6	2.3	1.5	2.4	1.4
	39	1.5	1.3	1.8	1.4	2.0	1.6	2.2	1.6	2.2	1.6	2.3	1.5	2.4	1.4
2.8	10	1.9	1.6	2.2	1.8	2.6	2.0	2.8	2.0	3.0	2.1	3.4	2.2	3.7	2.1
	12	1.9	1.6	2.2	1.8	2.6	2.0	2.8	2.0	3.0	2.1	3.4	2.2	3.6	2.1
	14	1.9	1.6	2.2	1.8	2.6	2.0	2.8	2.0	3.0	2.1	3.4	2.2	3.6	2.1
	16	1.9	1.6	2.2	1.8	2.6	2.0	2.8	2.0	3.0	2.1	3.4	2.2	3.5	2.0
	18	1.9	1.6	2.2	1.8	2.6	2.0	2.8	2.0	3.0	2.1	3.4	2.2	3.5	2.0
	20	1.9	1.6	2.2	1.8	2.6	2.0	2.8	2.0	3.0	2.1	3.4	2.2	3.4	2.0
	21	1.9	1.6	2.2	1.8	2.6	2.0	2.8	2.0	3.0	2.1	3.4	2.2	3.4	2.0
	23	1.9	1.6	2.2	1.8	2.6	2.0	2.8	2.0	3.0	2.1	3.4	2.2	3.4	2.0
	25	1.9	1.6	2.2	1.8	2.6	2.0	2.8	2.0	3.0	2.1	3.3	2.1	3.3	1.9
	27	1.9	1.6	2.2	1.8	2.6	2.0	2.8	2.0	3.0	2.1	3.2	2.1	3.3	1.9
	29	1.9	1.6	2.2	1.8	2.6	2.0	2.8	2.0	3.0	2.1	3.2	2.0	3.2	1.9
	31	1.9	1.6	2.2	1.8	2.6	2.0	2.8	2.0	3.0	2.1	3.2	2.0	3.2	1.8
	33	1.9	1.6	2.2	1.8	2.6	2.0	2.8	2.0	3.0	2.1	3.1	2.0	3.1	1.8
	35	1.9	1.6	2.2	1.8	2.6	2.0	2.8	2.0	3.0	2.1	3.0	2.0	3.1	1.8
	37	1.9	1.6	2.2	1.8	2.6	2.0	2.8	2.0	2.9	2.0	3.0	1.9	3.0	1.8
	39	1.9	1.6	2.2	1.8	2.6	2.0	2.8	2.0	2.8	2.0	2.9	1.9	3.0	1.7
3.6	10	2.4	2.1	2.9	2.3	3.3	2.5	3.6	2.6	3.9	2.7	4.3	2.8	4.7	2.8
	12	2.4	2.1	2.9	2.3	3.3	2.5	3.6	2.6	3.9	2.7	4.3	2.8	4.7	2.8
	14	2.4	2.1	2.9	2.3	3.3	2.5	3.6	2.6	3.9	2.7	4.3	2.8	4.6	2.7
	16	2.4	2.1	2.9	2.3	3.3	2.5	3.6	2.6	3.9	2.7	4.3	2.8	4.6	2.7
	18	2.4	2.1	2.9	2.3	3.3	2.5	3.6	2.6	3.9	2.7	4.3	2.8	4.5	2.7
	20	2.4	2.1	2.9	2.3	3.3	2.5	3.6	2.6	3.9	2.7	4.3	2.8	4.4	2.6
	21	2.4	2.1	2.9	2.3	3.3	2.5	3.6	2.6	3.9	2.7	4.3	2.8	4.4	2.6
	23	2.4	2.1	2.9	2.3	3.3	2.5	3.6	2.6	3.9	2.7	4.3	2.8	4.3	2.5
	25	2.4	2.1	2.9	2.3	3.3	2.5	3.6	2.6	3.9	2.7	4.3	2.8	4.3	2.5
	27	2.4	2.1	2.9	2.3	3.3	2.5	3.6	2.6	3.9	2.7	4.2	2.7	4.2	2.5
	29	2.4	2.1	2.9	2.3	3.3	2.5	3.6	2.6	3.9	2.7	4.1	2.7	4.2	2.4
	31	2.4	2.1	2.9	2.3	3.3	2.5	3.6	2.6	3.9	2.7	4.1	2.6	4.1	2.4
	33	2.4	2.1	2.9	2.3	3.3	2.5	3.6	2.6	3.9	2.7	4.0	2.6	4.0	2.3
	35	2.4	2.1	2.9	2.3	3.3	2.5	3.6	2.6	3.9	2.7	3.9	2.5	4.0	2.3
	37	2.4	2.1	2.9	2.3	3.3	2.5	3.6	2.6	3.8	2.6	3.8	2.5	3.9	2.3
	39	2.4	2.1	2.9	2.3	3.3	2.5	3.6	2.6	3.7	2.5	3.8	2.4	3.9	2.2

Notes:
TC: Total Capacity(kW)
SHC: Sensible Heat Capacity(kW)
1. Capacity tables show the representative value of conditions which may occur.
2. Refer to Capacity Correction Factor in the outdoor unit PDB for the actual performance data of each indoor unit and outdoor unit combination.

6. Capacity Tables

Cooling capacity

Capacity Index	Outdoor air temp. (DB, °C)	Indoor air temp. (DB/WB, °C)													
		20		23		26		27		28		30		32	
		14		16		18		19		20		22		24	
		TC	SHC	TC	SHC	TC	SHC	TC	SHC	TC	SHC	TC	SHC	TC	SHC
		kW	kW	kW	kW	kW	kW	kW	kW	kW	kW	kW	kW	kW	kW
5.6	10	3.8	3.2	4.5	3.5	5.2	3.8	5.6	3.9	6.0	4.1	6.7	4.2	7.3	4.1
	12	3.8	3.2	4.5	3.5	5.2	3.8	5.6	3.9	6.0	4.1	6.7	4.2	7.3	4.1
	14	3.8	3.2	4.5	3.5	5.2	3.8	5.6	3.9	6.0	4.1	6.7	4.2	7.2	4.1
	16	3.8	3.2	4.5	3.5	5.2	3.8	5.6	3.9	6.0	4.1	6.7	4.2	7.1	4.0
	18	3.8	3.2	4.5	3.5	5.2	3.8	5.6	3.9	6.0	4.1	6.7	4.2	6.9	4.0
	20	3.8	3.2	4.5	3.5	5.2	3.8	5.6	3.9	6.0	4.1	6.7	4.2	6.9	3.9
	21	3.8	3.2	4.5	3.5	5.2	3.8	5.6	3.9	6.0	4.1	6.7	4.2	6.9	3.9
	23	3.8	3.2	4.5	3.5	5.2	3.8	5.6	3.9	6.0	4.1	6.7	4.2	6.7	3.8
	25	3.8	3.2	4.5	3.5	5.2	3.8	5.6	3.9	6.0	4.1	6.6	4.1	6.6	3.7
	27	3.8	3.2	4.5	3.5	5.2	3.8	5.6	3.9	6.0	4.1	6.5	4.1	6.5	3.7
	29	3.8	3.2	4.5	3.5	5.2	3.8	5.6	3.9	6.0	4.1	6.4	4.0	6.5	3.7
	31	3.8	3.2	4.5	3.5	5.2	3.8	5.6	3.9	6.0	4.1	6.3	3.9	6.4	3.6
	33	3.8	3.2	4.5	3.5	5.2	3.8	5.6	3.9	6.0	4.1	6.2	3.9	6.2	3.5
	35	3.8	3.2	4.5	3.5	5.2	3.8	5.6	3.9	6.0	4.1	6.1	3.8	6.2	3.5
	37	3.8	3.2	4.5	3.5	5.2	3.8	5.6	3.9	5.8	3.9	5.9	3.7	6.1	3.4
	39	3.8	3.2	4.5	3.5	5.2	3.8	5.6	3.9	5.7	3.8	5.8	3.7	6.0	3.4
7.1	10	4.8	4.1	5.7	4.5	6.6	4.9	7.1	5.0	7.6	5.2	8.5	5.4	9.3	5.3
	12	4.8	4.1	5.7	4.5	6.6	4.9	7.1	5.0	7.6	5.2	8.5	5.4	9.2	5.3
	14	4.8	4.1	5.7	4.5	6.6	4.9	7.1	5.0	7.6	5.2	8.5	5.4	9.1	5.2
	16	4.8	4.1	5.7	4.5	6.6	4.9	7.1	5.0	7.6	5.2	8.5	5.4	9.0	5.1
	18	4.8	4.1	5.7	4.5	6.6	4.9	7.1	5.0	7.6	5.2	8.5	5.4	8.8	5.1
	20	4.8	4.1	5.7	4.5	6.6	4.9	7.1	5.0	7.6	5.2	8.5	5.4	8.7	5.0
	21	4.8	4.1	5.7	4.5	6.6	4.9	7.1	5.0	7.6	5.2	8.5	5.4	8.7	5.0
	23	4.8	4.1	5.7	4.5	6.6	4.9	7.1	5.0	7.6	5.2	8.5	5.4	8.5	4.9
	25	4.8	4.1	5.7	4.5	6.6	4.9	7.1	5.0	7.6	5.2	8.4	5.3	8.4	4.8
	27	4.8	4.1	5.7	4.5	6.6	4.9	7.1	5.0	7.6	5.2	8.2	5.2	8.3	4.8
	29	4.8	4.1	5.7	4.5	6.6	4.9	7.1	5.0	7.6	5.2	8.1	5.1	8.2	4.7
	31	4.8	4.1	5.7	4.5	6.6	4.9	7.1	5.0	7.6	5.2	8.0	5.0	8.1	4.6
	33	4.8	4.1	5.7	4.5	6.6	4.9	7.1	5.0	7.6	5.2	7.8	5.0	7.9	4.5
	35	4.8	4.1	5.7	4.5	6.6	4.9	7.1	5.0	7.6	5.2	7.7	4.9	7.8	4.5
	37	4.8	4.1	5.7	4.5	6.6	4.9	7.1	5.0	7.4	5.0	7.5	4.8	7.7	4.4
	39	4.8	4.1	5.7	4.5	6.6	4.9	7.1	5.0	7.2	4.9	7.4	4.7	7.6	4.3

Notes:
TC: Total Capacity(kW)
SHC: Sensible Heat Capacity(kW)
1. Capacity tables show the representative value of conditions which may occur.
2. Refer to Capacity Correction Factor in the outdoor unit PDB for the actual performance data of each indoor unit and outdoor unit combination.

6. Capacity Tables

6.2 Heating Capacity

Heating capacity

Capacity Index	Outdoor air temp.		Indoor air temp. (DB, °C)					
			16	18	20	21	22	24
	DB(°C)	WB(°C)	TC	TC	TC	TC	TC	TC
			kW	kW	kW	kW	kW	kW
2.2	-24.8	-25.0	1.4	1.4	1.4	1.4	1.4	1.4
	-21.8	-22.0	1.7	1.7	1.7	1.7	1.7	1.7
	-19.8	-20.0	1.8	1.8	1.8	1.8	1.8	1.8
	-18.8	-19.0	1.9	1.9	1.9	1.9	1.9	1.9
	-16.7	-17.0	2.0	2.0	2.0	2.0	2.0	2.0
	-14.7	-15.0	2.1	2.1	2.1	2.1	2.1	2.0
	-12.6	-13.0	2.2	2.2	2.2	2.2	2.1	2.1
	-10.5	-11.0	2.3	2.3	2.2	2.2	2.2	2.2
	-9.5	-10.0	2.3	2.3	2.3	2.3	2.3	2.2
	-8.5	-9.1	2.3	2.3	2.3	2.3	2.3	2.2
	-7.0	-7.6	2.4	2.4	2.4	2.4	2.3	2.2
	-5.0	-5.6	2.5	2.5	2.5	2.4	2.3	2.2
	-3.0	-3.7	2.6	2.6	2.5	2.4	2.3	2.2
	0.0	-0.7	2.7	2.6	2.5	2.4	2.3	2.2
	3.0	2.2	2.7	2.7	2.5	2.4	2.3	2.2
	5.0	4.1	2.8	2.7	2.5	2.4	2.3	2.2
	7.0	6.0	2.8	2.7	2.5	2.4	2.3	2.2
	9.0	7.9	2.8	2.7	2.5	2.4	2.3	2.2
	11.0	9.8	2.8	2.7	2.5	2.4	2.3	2.2
	13.0	11.8	2.8	2.7	2.5	2.4	2.3	2.2
	15.0	13.7	2.8	2.7	2.5	2.4	2.3	2.2
2.8	-24.8	-25.0	1.9	1.9	1.8	1.8	1.8	1.8
	-21.8	-22.0	2.2	2.2	2.2	2.2	2.2	2.2
	-19.8	-20.0	2.4	2.4	2.3	2.3	2.3	2.3
	-18.8	-19.0	2.4	2.4	2.4	2.4	2.4	2.4
	-16.7	-17.0	2.5	2.5	2.5	2.5	2.5	2.5
	-14.7	-15.0	2.7	2.7	2.6	2.6	2.6	2.6
	-12.6	-13.0	2.8	2.8	2.8	2.8	2.7	2.7
	-10.5	-11.0	2.9	2.9	2.9	2.9	2.9	2.8
	-9.5	-10.0	3.0	3.0	2.9	2.9	2.9	2.8
	-8.5	-9.1	3.0	3.0	3.0	3.0	3.0	2.8
	-7.0	-7.6	3.1	3.1	3.1	3.1	3.0	2.8
	-5.0	-5.6	3.2	3.2	3.2	3.1	3.0	2.8
	-3.0	-3.7	3.4	3.3	3.2	3.1	3.0	2.8
	0.0	-0.7	3.4	3.3	3.2	3.1	3.0	2.8
	3.0	2.2	3.5	3.4	3.2	3.1	3.0	2.8
	5.0	4.1	3.6	3.4	3.2	3.1	3.0	2.8
	7.0	6.0	3.6	3.4	3.2	3.1	3.0	2.8
	9.0	7.9	3.6	3.4	3.2	3.1	3.0	2.8
	11.0	9.8	3.6	3.4	3.2	3.1	3.0	2.8
	13.0	11.8	3.6	3.4	3.2	3.1	3.0	2.8
	15.0	13.7	3.6	3.4	3.2	3.1	3.0	2.8
3.6	-24.8	-25.0	2.3	2.3	2.3	2.3	2.3	2.3
	-21.8	-22.0	2.8	2.8	2.8	2.8	2.8	2.8
	-19.8	-20.0	2.9	2.9	2.9	2.9	2.9	2.9
	-18.8	-19.0	3.0	3.0	3.0	3.0	3.0	3.0
	-16.7	-17.0	3.1	3.1	3.1	3.1	3.1	3.1
	-14.7	-15.0	3.3	3.3	3.3	3.3	3.3	3.3
	-12.6	-13.0	3.5	3.4	3.4	3.4	3.4	3.4
	-10.5	-11.0	3.6	3.6	3.6	3.6	3.6	3.5
	-9.5	-10.0	3.7	3.7	3.7	3.7	3.7	3.5
	-8.5	-9.1	3.8	3.8	3.7	3.7	3.7	3.5
	-7.0	-7.6	3.9	3.9	3.9	3.8	3.7	3.5
	-5.0	-5.6	4.0	4.0	4.0	3.9	3.7	3.5
	-3.0	-3.7	4.2	4.1	4.0	3.9	3.7	3.5
	0.0	-0.7	4.3	4.1	4.0	3.9	3.7	3.5
	3.0	2.2	4.4	4.3	4.0	3.9	3.7	3.5
	5.0	4.1	4.5	4.3	4.0	3.9	3.7	3.5
	7.0	6.0	4.5	4.3	4.0	3.9	3.7	3.5
	9.0	7.9	4.5	4.3	4.0	3.9	3.7	3.5
	11.0	9.8	4.5	4.3	4.0	3.9	3.7	3.5
	13.0	11.8	4.5	4.3	4.0	3.9	3.7	3.5
	15.0	13.7	4.5	4.3	4.0	3.9	3.7	3.5

Notes:

TC: Total Capacity(kW)

1. Capacity tables show the representative value of conditions which may occur.
2. is shown as reference. When selecting the outdoor units, avoid the outdoor air temperature range shown by .
3. In accordance with operation limits of outdoor unit, applicable range of capacity tables is different.
4. Refer to Capacity Correction Factor in the outdoor unit PDB for the actual performance data of each indoor unit and outdoor unit combination.

6. Capacity Tables

Heating capacity

Capacity Index	Outdoor air temp.		Indoor air temp. (DB, °C)					
			16	18	20	21	22	24
	DB(°C)	WB(°C)	TC	TC	TC	TC	TC	TC
			kW	kW	kW	kW	kW	kW
5.6	-24.8	-25.0	3.6	3.6	3.6	3.6	3.6	3.6
	-21.8	-22.0	4.4	4.4	4.4	4.4	4.4	4.4
	-19.8	-20.0	4.6	4.6	4.6	4.6	4.6	4.6
	-18.8	-19.0	4.8	4.7	4.7	4.7	4.7	4.7
	-16.7	-17.0	5.0	5.0	5.0	4.9	4.9	4.9
	-14.7	-15.0	5.2	5.2	5.2	5.2	5.2	5.2
	-12.6	-13.0	5.5	5.4	5.4	5.4	5.4	5.4
	-10.5	-11.0	5.7	5.7	5.7	5.7	5.7	5.5
	-9.5	-10.0	5.8	5.8	5.8	5.8	5.8	5.5
	-8.5	-9.1	5.9	5.9	5.9	5.9	5.9	5.5
	-7.0	-7.6	6.1	6.1	6.1	6.0	5.9	5.5
	-5.0	-5.6	6.3	6.3	6.3	6.1	5.9	5.5
	-3.0	-3.7	6.6	6.5	6.3	6.1	5.9	5.5
	0.0	-0.7	6.7	6.5	6.3	6.1	5.9	5.5
	3.0	2.2	6.9	6.7	6.3	6.1	5.9	5.5
	5.0	4.1	7.0	6.7	6.3	6.1	5.9	5.5
	7.0	6.0	7.1	6.7	6.3	6.1	5.9	5.5
	9.0	7.9	7.1	6.7	6.3	6.1	5.9	5.5
	11.0	9.8	7.1	6.7	6.3	6.1	5.9	5.5
	13.0	11.8	7.1	6.7	6.3	6.1	5.9	5.5
	15.0	13.7	7.1	6.7	6.3	6.1	5.9	5.5
7.1	-24.8	-25.0	4.1	4.1	4.1	4.1	4.1	4.1
	-21.8	-22.0	5.0	5.0	4.9	4.9	4.9	4.9
	-19.8	-20.0	5.2	5.2	5.2	5.2	5.2	5.2
	-18.8	-19.0	5.4	5.3	5.3	5.3	5.3	5.3
	-16.7	-17.0	5.6	5.6	5.6	5.6	5.6	5.6
	-14.7	-15.0	5.9	5.9	5.9	5.9	5.9	5.8
	-12.6	-13.0	6.2	6.1	6.1	6.1	6.1	6.1
	-10.5	-11.0	6.4	6.4	6.4	6.4	6.4	6.2
	-9.5	-10.0	6.5	6.5	6.5	6.5	6.5	6.2
	-8.5	-9.1	6.7	6.7	6.6	6.6	6.6	6.2
	-7.0	-7.6	6.9	6.8	6.8	6.8	6.6	6.2
	-5.0	-5.6	7.1	7.1	7.1	6.9	6.6	6.2
	-3.0	-3.7	7.5	7.3	7.1	6.9	6.6	6.2
	0.0	-0.7	7.6	7.3	7.1	6.9	6.6	6.2
	3.0	2.2	7.8	7.6	7.1	6.9	6.6	6.2
	5.0	4.1	7.9	7.6	7.1	6.9	6.6	6.2
	7.0	6.0	8.0	7.6	7.1	6.9	6.6	6.2
	9.0	7.9	8.0	7.6	7.1	6.9	6.6	6.2
	11.0	9.8	8.0	7.6	7.1	6.9	6.6	6.2
	13.0	11.8	8.0	7.6	7.1	6.9	6.6	6.2
	15.0	13.7	8.0	7.6	7.1	6.9	6.6	6.2

Notes:

TC: Total Capacity(kW)

1. Capacity tables show the representative value of conditions which may occur.
2. is shown as reference. When selecting the outdoor units, avoid the outdoor air temperature range shown by .
3. In accordance with operation limits of outdoor unit, applicable range of capacity tables is different.
4. Refer to Capacity Correction Factor in the outdoor unit PDB for the actual performance data of each indoor unit and outdoor unit combination.

7. Air Velocity and Temperature Distribution(Reference Data)

ARNU07GTU*4

Cooling

Discharge angle: 50°

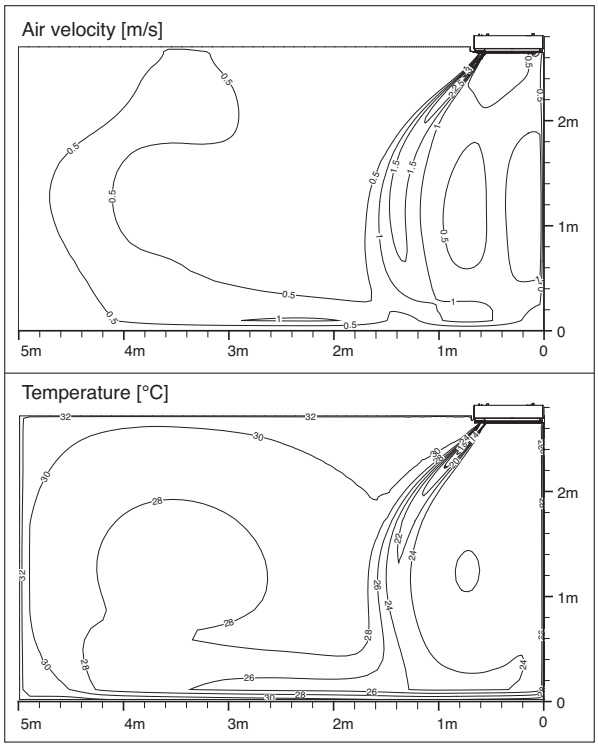

Heating

Discharge angle: 60°

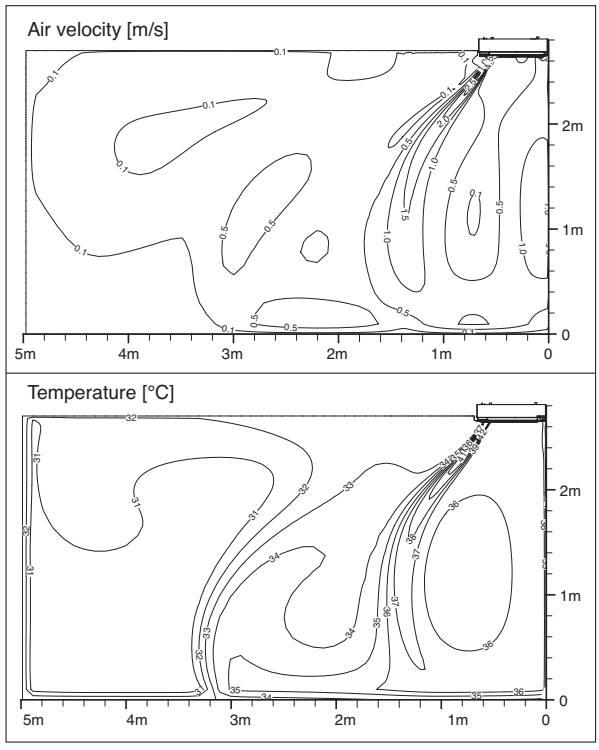

ARNU09GTU*4

Cooling

Discharge angle: 50°

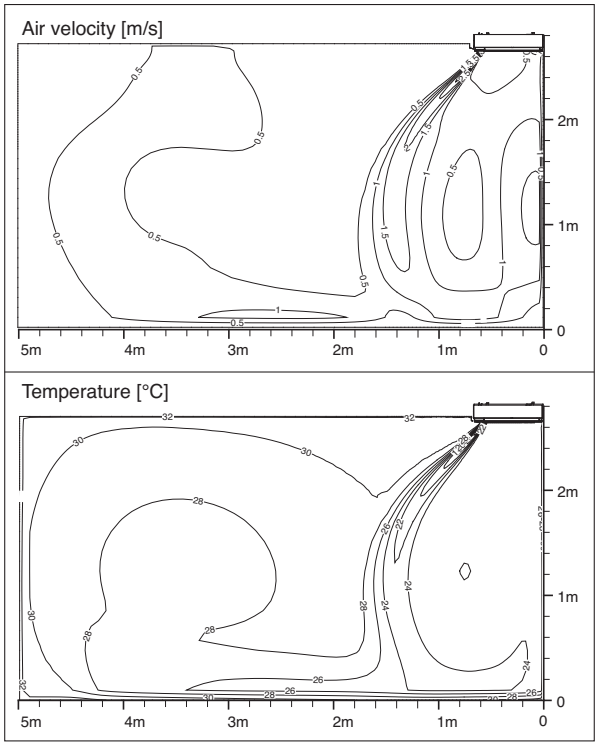

Heating

Discharge angle: 60°

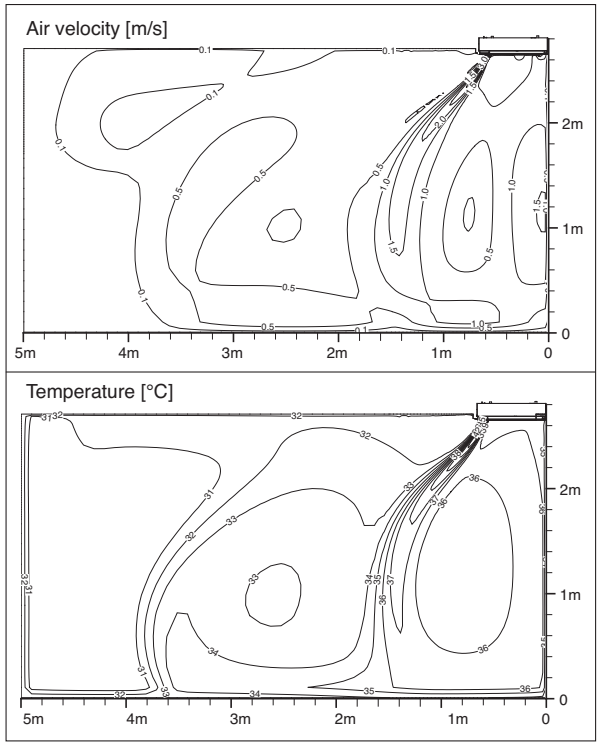

Note: The standard setup height is 2.7m. Shown here is the measurement distribution at the ceiling height of 2.7m
Fan operating mode is high.

7. Air Velocity and Temperature Distribution(Reference Data)

ARNU12GTU*4

Cooling

Discharge angle: 50°

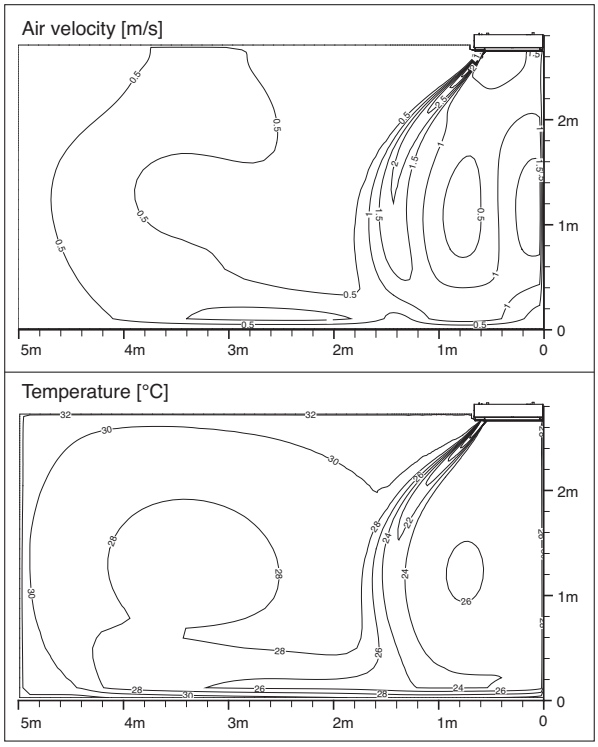

Heating

Discharge angle: 60°

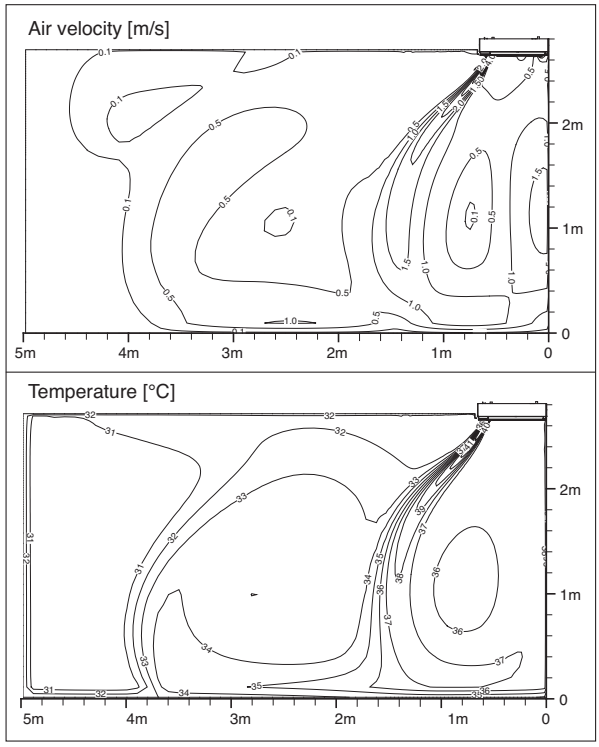

ARNU18GTT*4

Cooling

Discharge angle: 50°

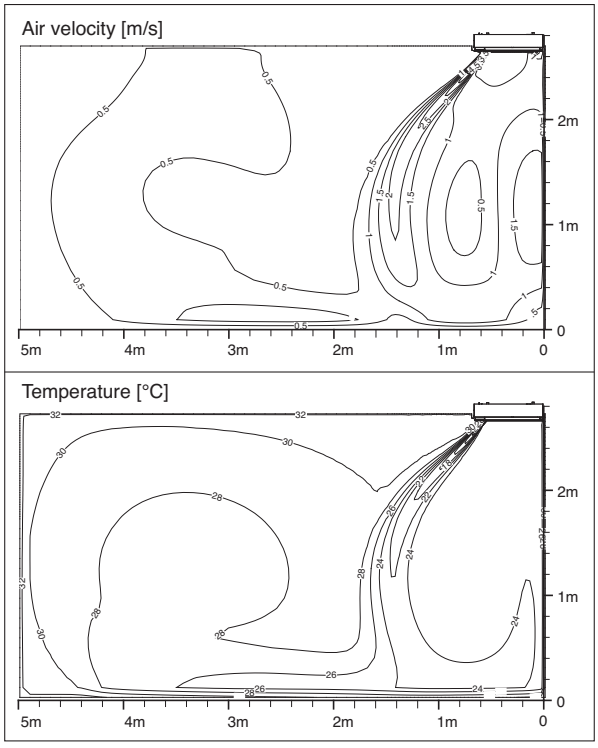

Heating

Discharge angle: 60°

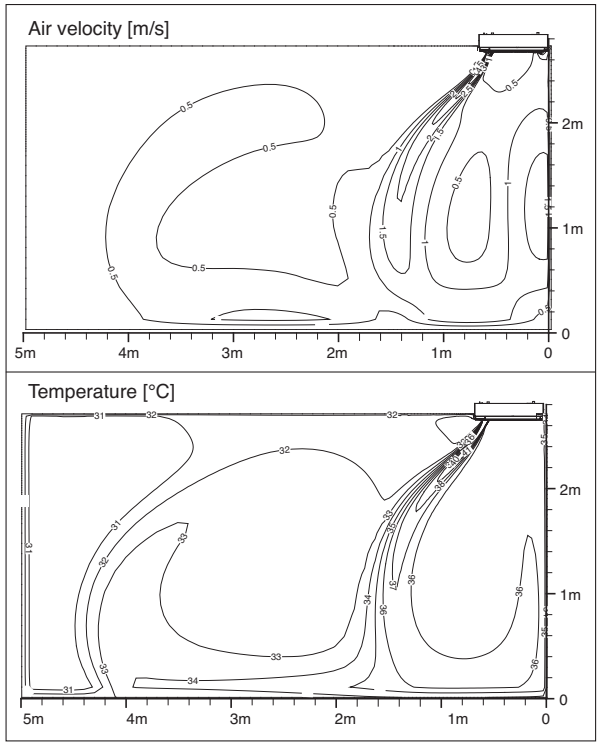

Note: The standard setup height is 2.7m. Shown here is the measurement distribution at the ceiling height of 2.7m
Fan operating mode is high.

7. Air Velocity and Temperature Distribution(Reference Data)

ARNU24GTT*4

Cooling

Discharge angle: 50°

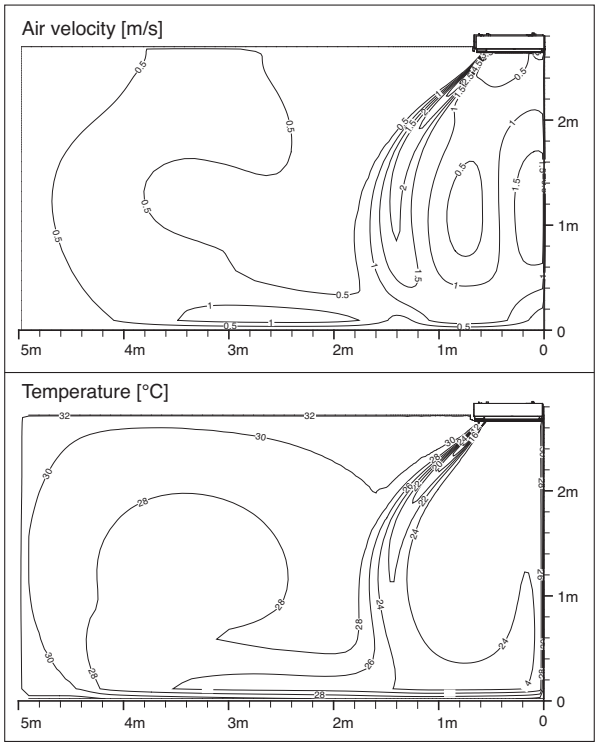

Heating

Discharge angle: 60°

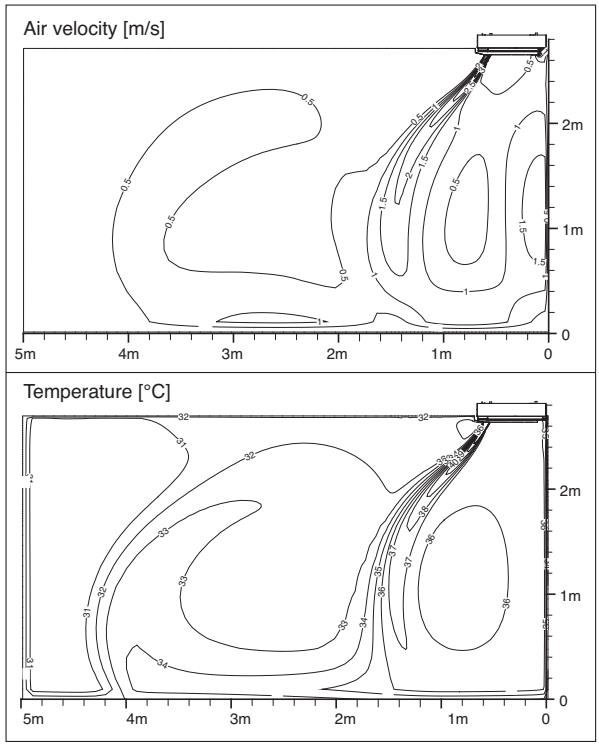

Note: The standard setup height is 2.7m. Shown here is the measurement distribution at the ceiling height of 2.7m
Fan operating mode is high.

8. Electric Characteristics

Units					Power Supply		IFM		Input(W)	
Model	Type	Hz	Volts	Voltage Range	MCA	MFA	kW	FLA	Cooling	Heating
ARNU07GTU*4	TU	50	220-240	Max:264 Min:198	0.23	15	0.03	0.18	40	40
ARNU09GTU*4	TU				0.23	15	0.03	0.18	40	40
ARNU12GTU*4	TU				0.23	15	0.03	0.18	40	40
ARNU18GTT*4	TT				0.38	15	0.03	0.30	70	70
ARNU24GTT*4	TT				0.38	15	0.03	0.30	70	70
ARNU07GTU*4	TU	60	220	Max:242 Min:198	0.23	15	0.03	0.18	40	40
ARNU09GTU*4	TU				0.23	15	0.03	0.18	40	40
ARNU12GTU*4	TU				0.23	15	0.03	0.18	40	40
ARNU18GTT*4	TT				0.23	15	0.03	0.30	70	70
ARNU24GTT*4	TT				0.38	15	0.03	0.30	70	70

Symbols:

MCA : Minimum Circuit Amperes (A)

MFA : Maximum Fuse Amperes(see note 5)

kW : Fan Motor Rated Output(kW)

FLA : Full Load Amperes(A)

IFM : Indoor Fan Motor

Note :

1. Voltage Range
   Units are suitable for use on electrical system where voltage supplied to unit terminals is not below or above the listed range limits.
2. Maximum allowable voltage unbalance between phase is 2%.
3. MCA/MFA
   MCA = 1.25 x FLA
   MFA ≤ 4 x FLA
   (Next lower standard fuse rating. Minimum 15A)
4. Select wire size based on the larger value on the MCA.
5. Instead of fuse, use Circuit Breaker.

9. Sound Levels

9.1 Sound Pressure Levels

Overall

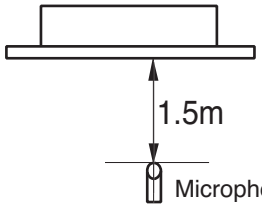

❊ Measuring place : Anechoic chamber

Model	Sound Pressure Levels dB(A)		
	H	M	L
ARNU07GTU*4	32	29	25
ARNU09GTU*4	35	34	32
ARNU12GTU*4	38	35	32
ARNU18GTT*4	40	37	35
ARNU24GTT*4	43	40	36

Notes:

1. Sound measured at 1.5m away from the center of the unit
2. Operating conditionl
   - Power source : 220-240V 50Hz / 220V 60Hz
   - Cooling : Indoor temperature (27°C DB, 19°C WB), Outdoor temperature (35°C DB, 24°C WB)
   - Heating : Indoor temperature (20°C DB, 15°C WB), Outdoor temperature (7°C DB, 6°C WB)
3. Reference accoustic pressure 0dB = 20μPa
4. Sound level will vary depending on a range of factors such as the construction(acoustic absorption coefficient) of particular room in which the equipment in installed.

ARNU07GTU*4

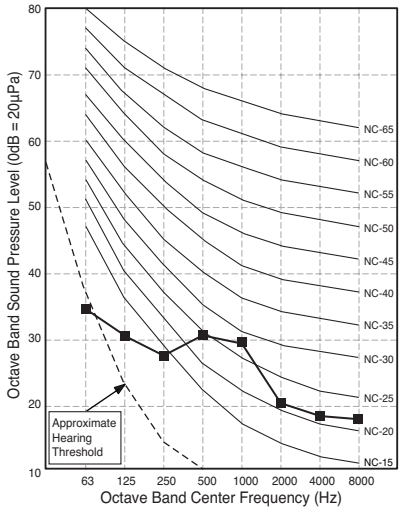

ARNU09GTU*4

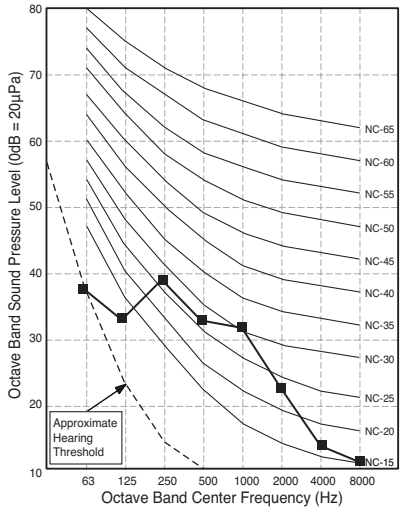

ARNU12GTU*4

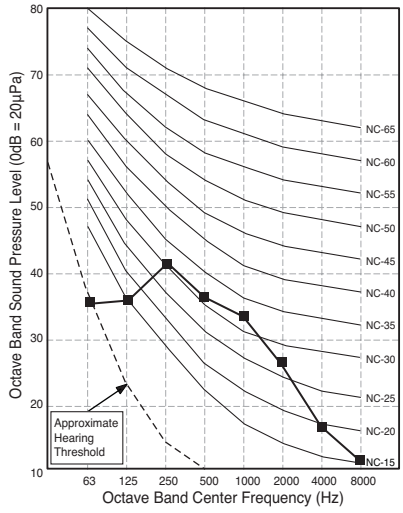

ARNU18GTT*4

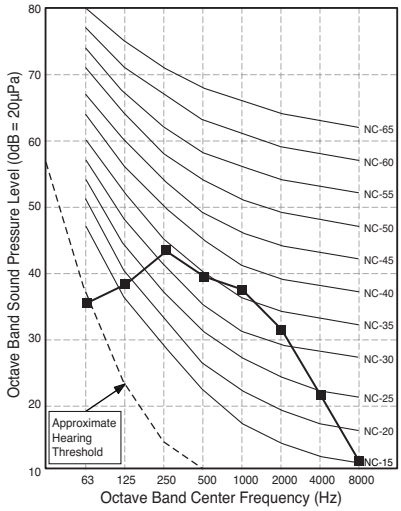

ARNU24GTT*4

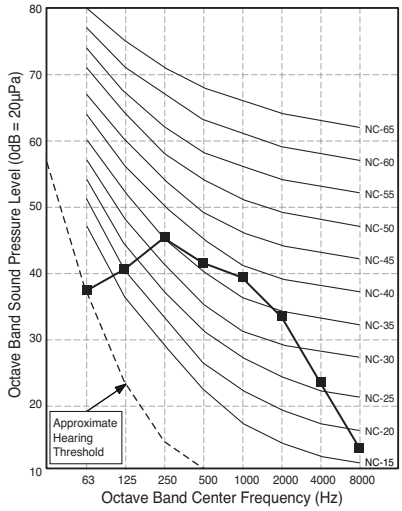

9. Sound Levels

9.2 Sound Power Levels

Model	Sound Power Levels dB(A)
	High Fan Speed
ARNU07GTU*4	50.0
ARNU09GTU*4	53.0
ARNU12GTU*4	57.0
ARNU18GTT*4	59.0
ARNU24GTT*4	62.0

Notes:
- Data is valid at diffuse field condition
- Data is valid at nominal operating condition
- Sound level can be increased in static pressure mode or used air guide.
- Sound power level is measured on the rated condition in the reverberation rooms.
- Sound level will vary depending on a range of factors such as the construction (acoustic absorption coefficient) of particular room in which the equipment in installed.
- Reference acoustic intensity 0dB = 10E-6μW/m²

ARNU07GTU*4

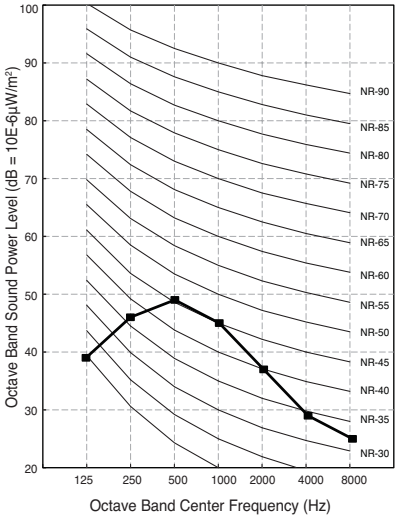

ARNU09GTU*4

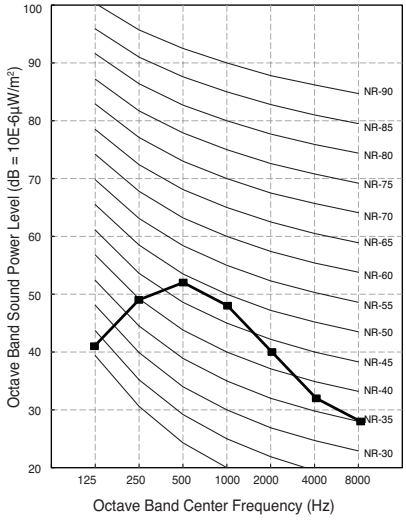

ARNU12GTU*4

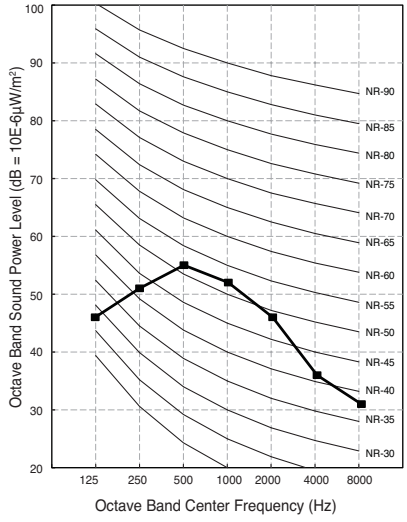

ARNU18GTT*4

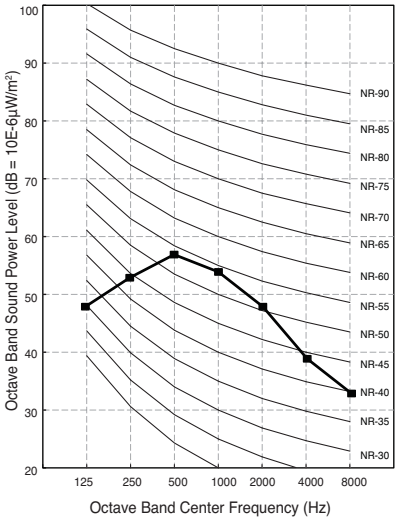

ARNU24GTT*4

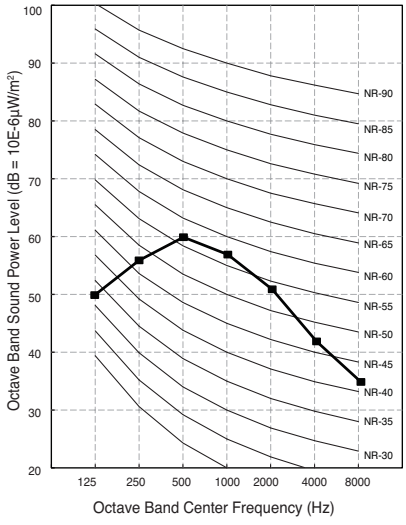

10. Installation

- Please read this instruction sheet completely before installing the product.
- When the power cord is damaged, replacement work shall be performed by authorized personnel only.
- Installation work must be performed in accordance with the national wiring standards by authorized personnel only.

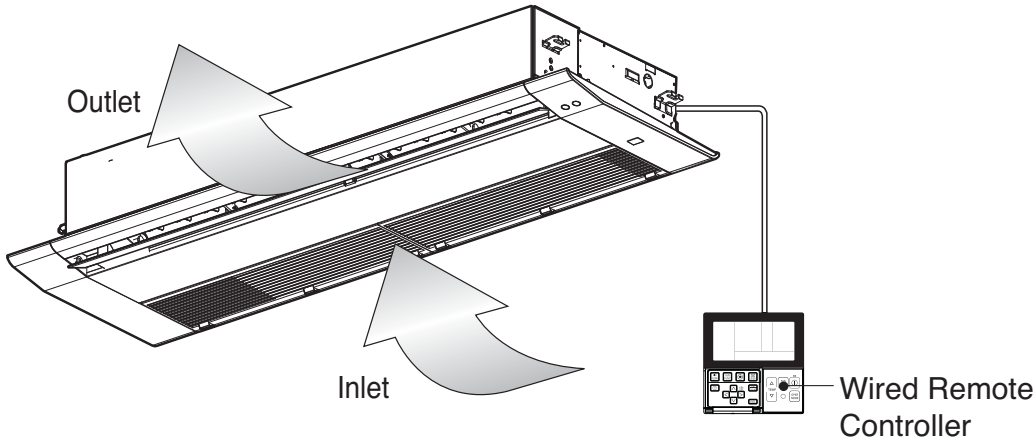

Required Parts

- Connecting cable
- Pipes: Gas side
  Liquid side
- Hanging Bolt
  (W 3/8 or M10 length 650mm)
- Insulated drain hose
- Additional Drain hose

Required Tools

- Level
- Screw driver
- Electric drill
- Hole core drill
- Flaring Tool set
- Torque Wrenches
- Hexagonal Wrench
- Gas-leak detector
- Thermometer

10.1 Selection of the best location

- There should not be any heat source or steam near the unit.
- There should not be any obstacles to the air circulation.
- A place where air circulation in the room will be good.
- A place where drainage can be easily obtained.
- A place where noise prevention is taken into consideration.
- Do not install the unit near the door way.
- Ensure the spaces indicated by arrows from the wall, ceiling, or other obstacles.
- The indoor unit must have the maintenance space.

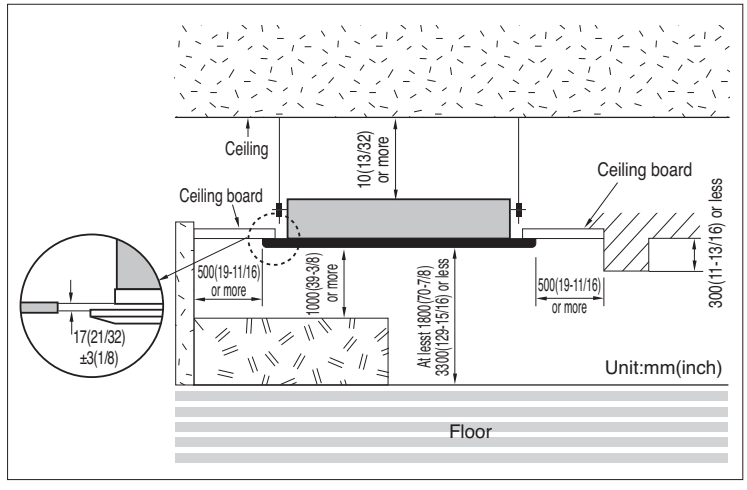

10. Installation

10.2 Ceiling opening dimensions and hanging bolt location

• The dimensions of the paper model for installation are the same as those of the ceiling opening dimensions.

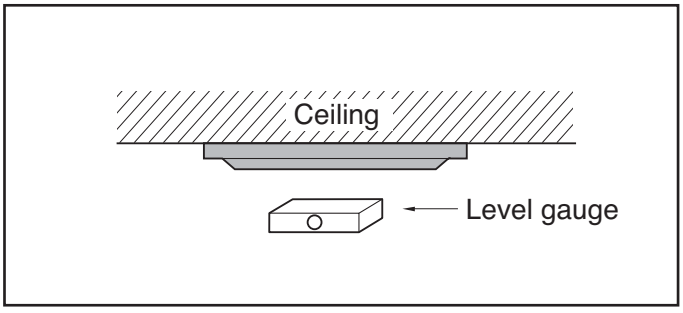

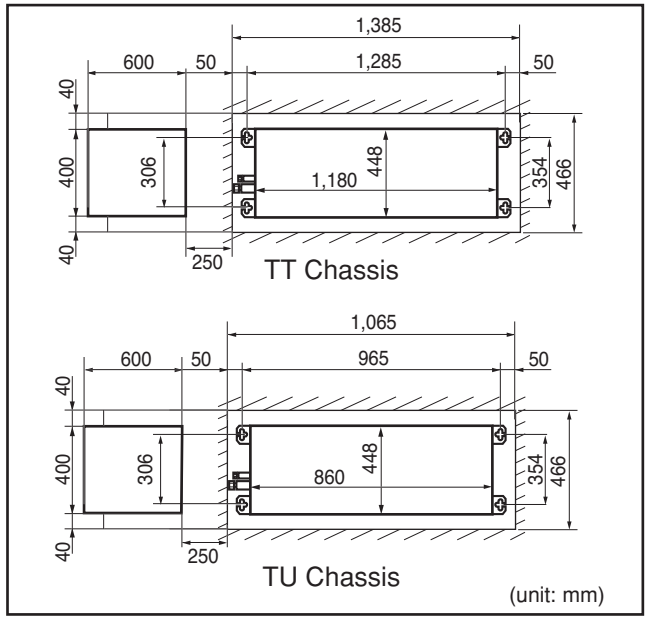

⚠ CAUTION

- This air-conditioner uses a drain pump.
- Install the unit horizontally using a level gauge.
- During the installation, care should be taken not to damage electric wires.

- Select and mark the position for fixing bolts and piping hole.
- Decide the position for fixing bolts slightly tilted to the drain direction after considering the direction of drain hose.
- Drill the hole for anchor bolt on the wall.

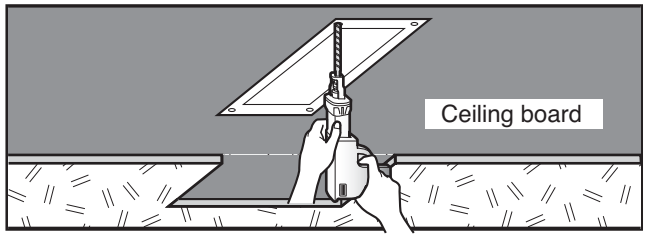

NOTE:

• Avoid the following installation location.

1. Such places as restaurants and kitchen where considerable amount of oil steam and flour is generated. These may cause heat exchange efficiency reduction, or water drops, drain pump mal-function. In these cases, take the following actions;
   - Make sure that ventilation fan is enough to cover all noxious gases from this place.
   - Ensure enough distance from the cooking room to install the air conditioner in such a place where it may not suck oily steam.

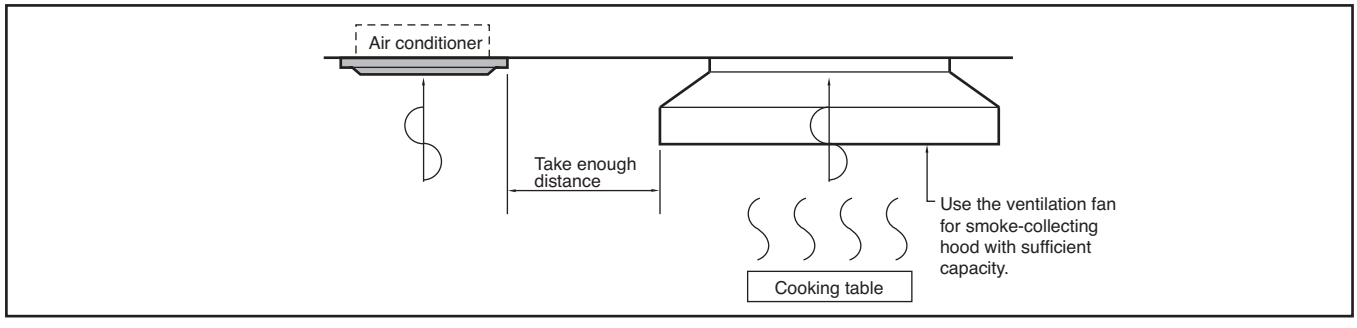

2. Avoid installing air conditioner in such places where cooking oil or iron powder is generated.
3. Avoid places where inflammable gas is generated.
4. Avoid place where noxious gas is generated.
5. Avoid places near high frequency generators.

10. Installation

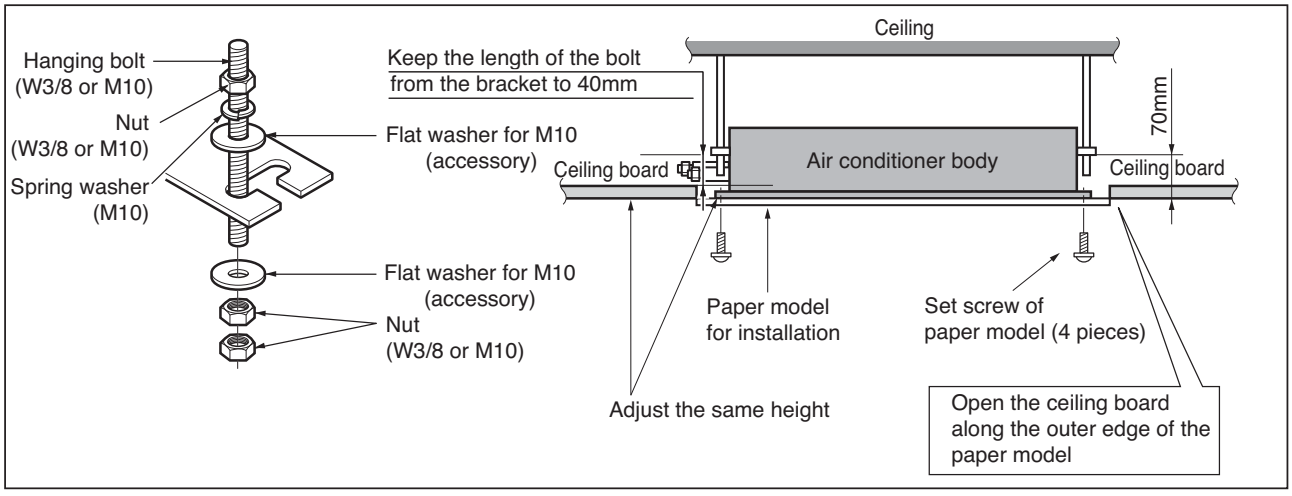

- The following parts are local purchasing.
  ① Hanging bolt - W 3/8 or M10
  ② Nut - W 3/8 or M10
  ③ Spring washer - M10
  ④ Plate washer - M10

⚠ CAUTION

- Tighten the nut and bolt to prevent the unit from falling.

10.3 Wiring Connection

- Connect the wires to the terminals on the control board individually according to the outdoor unit connection.
- Ensure that the color of the wires of outdoor unit and the terminal No. are the same as those of indoor unit respectively.

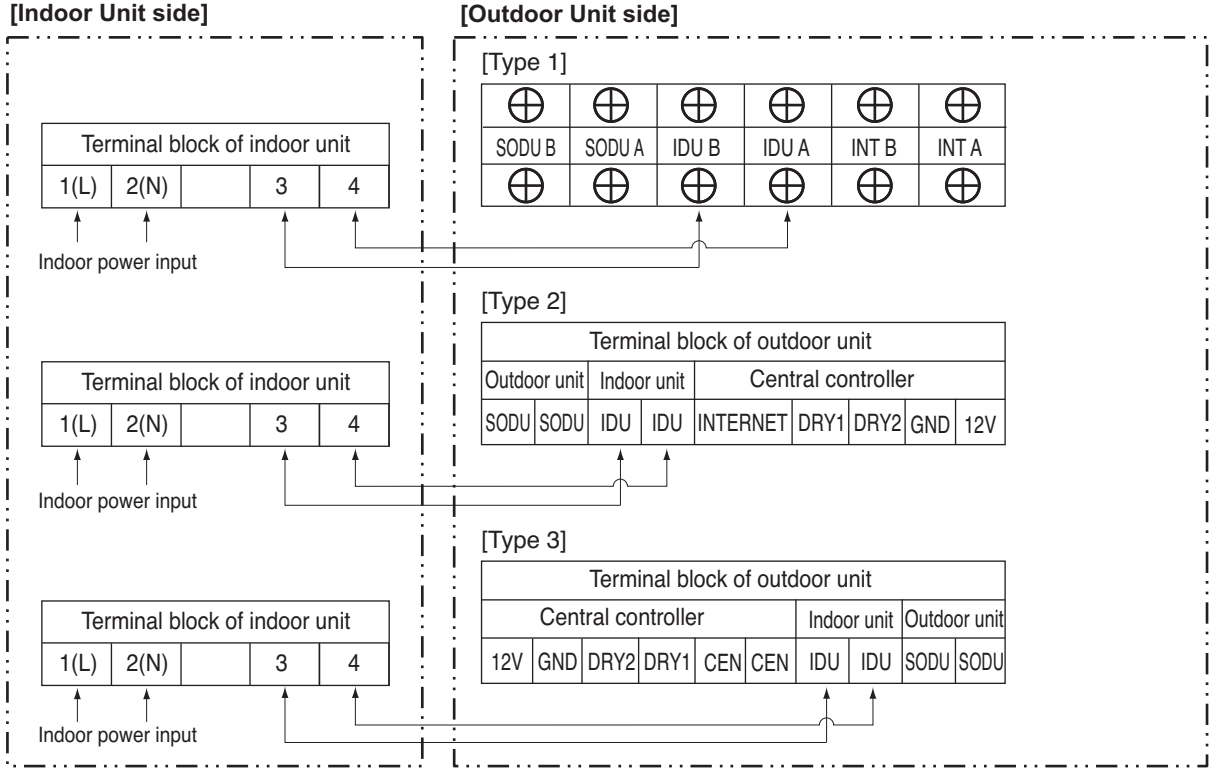

⚠ WARNING

Make sure that the screws of the terminal are not loose.

10.4 Installation of Decoration Panel (Panel Type)

The decoration panel has its installation direction.

Before installing the decoration panel, always remove the paper template.

1. Open the air outlet vane, and extract side covers.
2. Remove the air inlet panel from the decoration panel.
3. Hook decoration panel to indoor unit, using hooks attached at the backside of both side of decoration panel.
4. Arrange wires not to get caught between decoration panel and indoor unit.
5. Screw 7 fixing screws. (7,9,12kBtu : 6 screws)
6. Connect the vane motor connector ,display connector and air inlet panel connector.
7. Install the air inlet panel (including the air filter) and side covers.

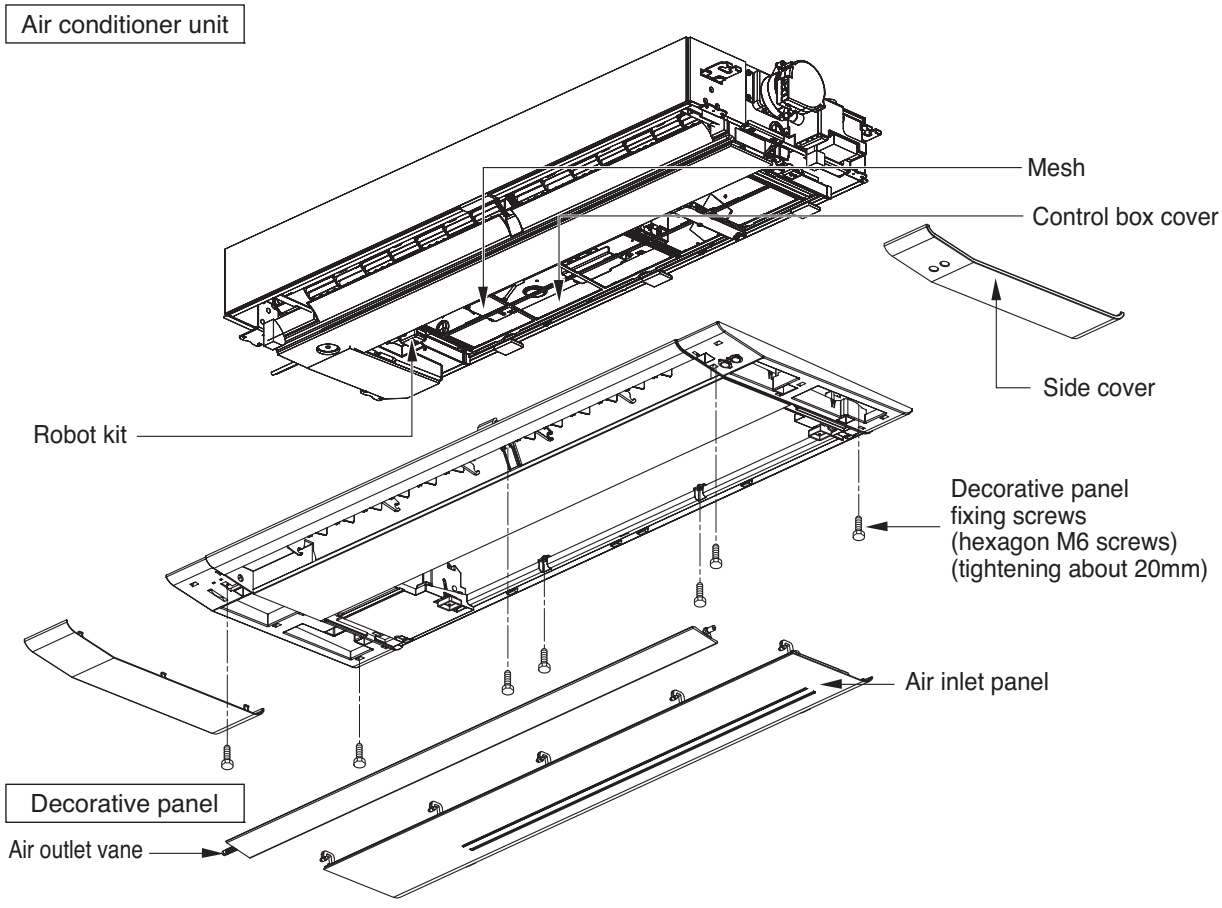

⚠ CAUTION

Install certainly the decoration panel. Cool air leakage causes sweating.
⇨ Waterdrops fall.

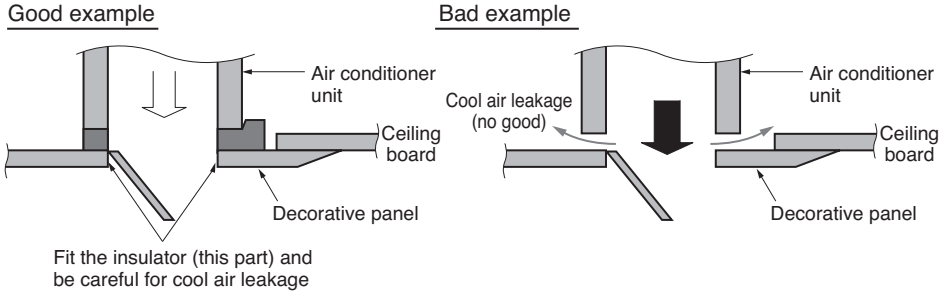

10.5 Installation of Decoration Panel(Grille Type)

The decoration panel has its installation direction.

Before installing the decoration panel, always remove the paper template.

1. Open the air outlet vane, and extract side covers.
2. Remove the air inlet grille from the decoration panel.
3. Hook decoration panel to indoor unit, using hooks attached at the backside of both side of decoration panel.
4. Arrange wires not to get caught between decoration panel and indoor unit.
5. Screw 7 fixing screws. (7,9,12kBtu : 6 screws)
6. Connect the vane motor connector and display connector. (Plasma connector for plasma model)
7. Install the air inlet grille (including the air filter) and side covers.

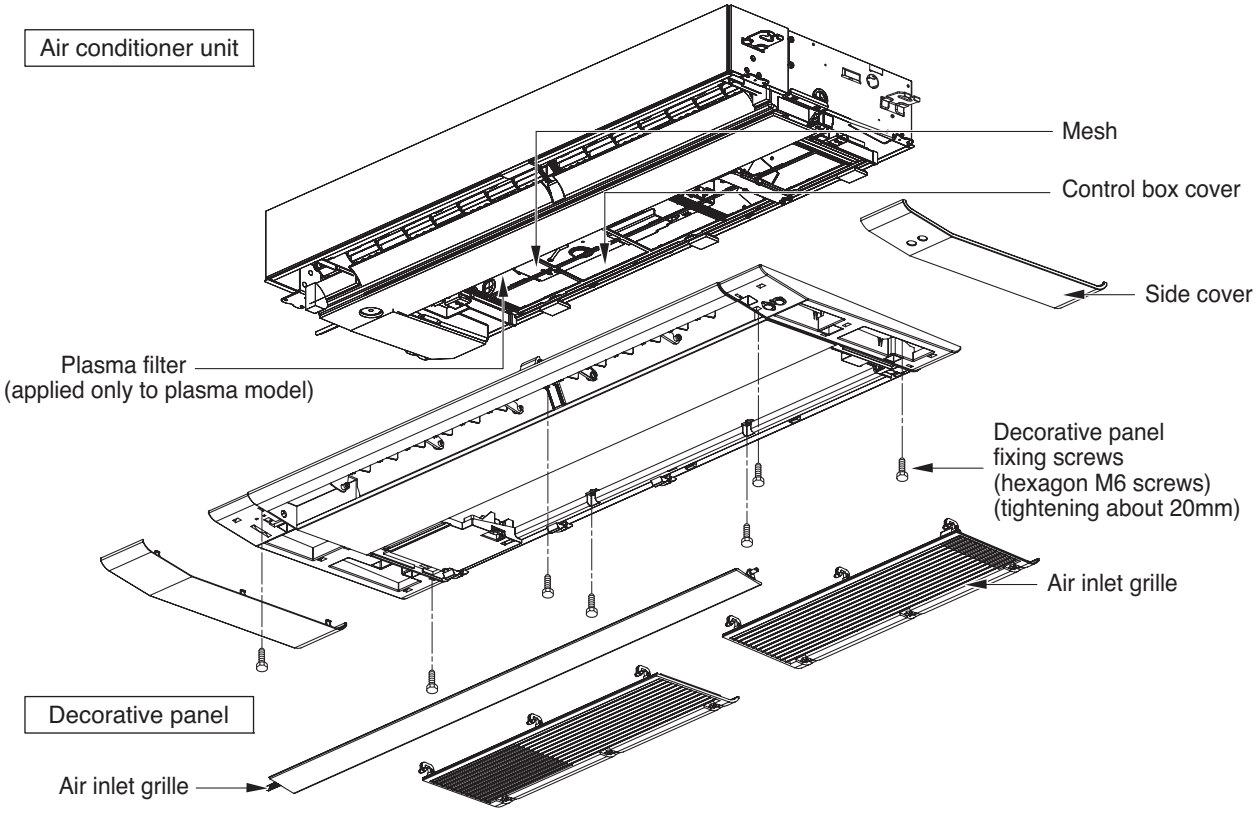

⚠ CAUTION

Install certainly the decoration panel. Cool air leakage causes sweating.
⇨ Waterdrops fall.

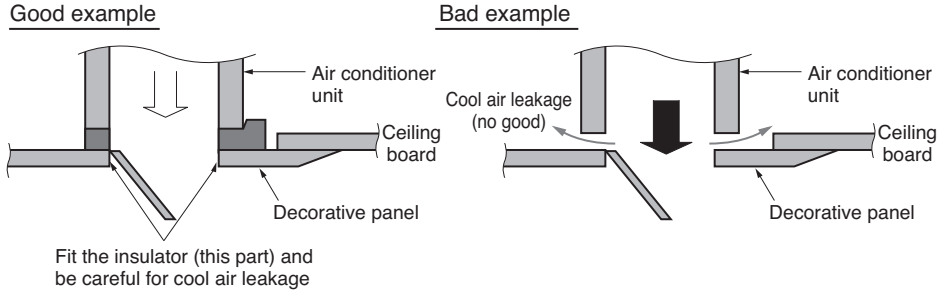

10.6 Indoor Unit Drain Piping

- Drain piping must have down-slope (1/50 to 1/100): be sure not to provide up-and-down slope to prevent reversal flow.
- During drain piping connection, be careful not to exert extra force on the drain port on the indoor unit.
- The outside diameter of the drain connection on the indoor unit is 32mm.

Piping material: Polyvinyl chloride pipe 25mm and pipe fittings

- Be sure to install heat insulation on the drain piping.

Heat insulation material: Polyethylene foam with thickness more than 8 mm.

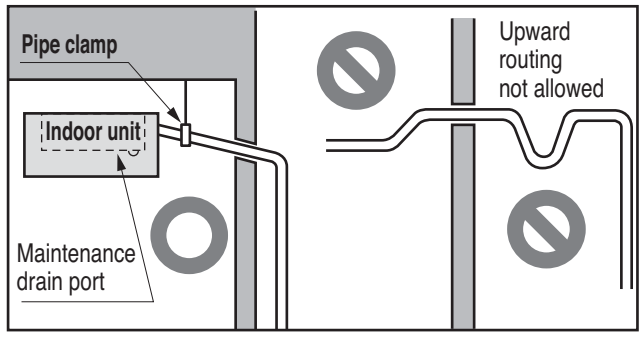

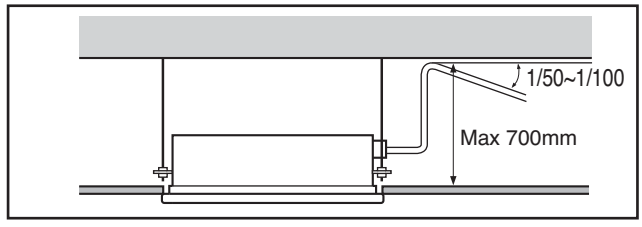

Drain test

The air conditioner uses a drain pump to drain water.
Use the following procedure to test the drain pump operation:

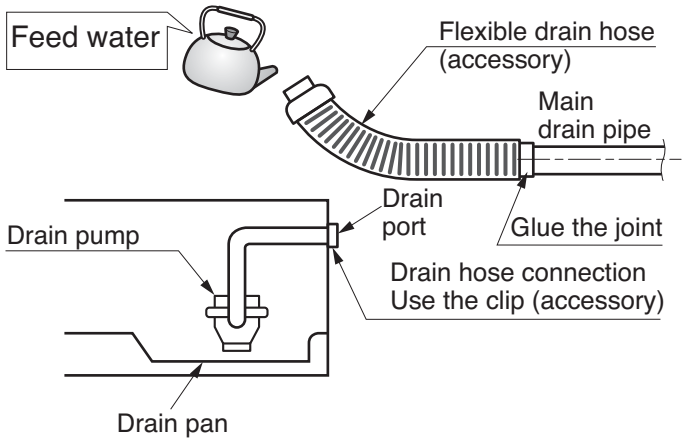

- Connect the main drain pipe to the exterior and leave it provisionally until the test comes to an end.
- Feed water to the flexible drain hose and check the piping for leakage.
- Be sure to check the drain pump for normal operating and noise when electrical wiring is complete.
- When the test is complete, connect the flexible drain hose to the drain port on the indoor unit.

⚠ CAUTION

The supplied flexible drain hose should not be curved, neither screwed. The curved or screwed hose may cause a leakage of water.

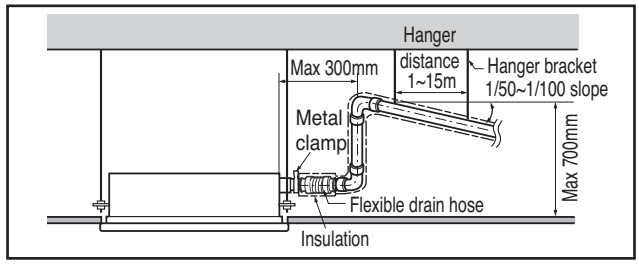

10. Installation

⚠ CAUTION

After the confirmation of the above conditions, prepare the wiring as follows:

1) Never fail to have separate power specially for the air conditioner. As for the method of wiring, follow the circuit diagram pasted on the inside of control box cover.
2) Provide a circuit breaker switch between power source and the unit.
3) The screw which fasten the wiring in the casing of electrical fittings are liable to come loose from vibrations to which the unit is subjected during the course of transportation. Check them and make sure that they are all tightly fastened. (If they are loose, it could give rise to burn-out of the wires.)
4) Confirm the Specification of power source
5) Confirm that electrical capacity is sufficient.
6) Be sure that the starting voltage is maintained at more than 90 percent of the rated voltage marked on the name plate.
7) Confirm that the cable thickness is as specified in the power sources specification. (Particularly note the relation between cable length and thickness.)
8) Do not install the leakage breaker in a place which is wet or moist. Water or moist may cause short circuit.
9) The following troubles would be caused by voltage drop-down.
- Vibration of a magnetic switch, damage on the contact point there of, fuse breaking, disturbance to the normal function of a overload protection device.
- Proper starting power is not given to the compressor.

WIRED REMOTE CONTROLLER INSTALLATION

- Since the room temperature sensor is in the remote controller, the remote controller box should be installed in a place away from direct sunlight, high humidity and direct supply of cold air to maintain proper space temperature. Install the remote controller about 5ft(1.5m) above the floor in an area with good air circulation at an average temperature.

Do not install the remote controller where it can be affected by:

- Drafts, or dead spots behind doors and in corners.
- Hot or cold air from ducts.
- Radiant heat from sun or appliances.
- Concealed pipes and chimneys.
- Uncontrolled areas such as an outside wall behind the remote controller.
- This remote controller is equipped with a seven segment LED. display. For proper display of the remote controller LED's, the remote controller should be installed properly as shown in Fig.1. (The standard height is 1.2~1.5 m from floor level.)

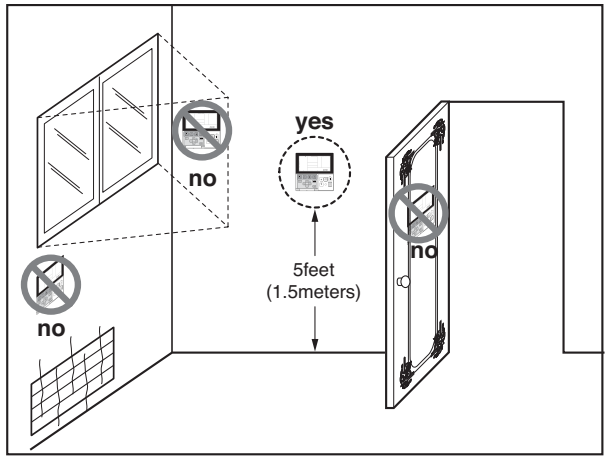

Fig.1 Typical locations for remote controller

11. Accessories

Name	Drain hose	Clamp metal	Washer for hanging bracket	Plastic band	Insulation for fitting
Quantity	1 EA	2 EA	8 EA	4 EA	1 SET
Shape	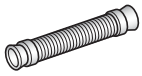			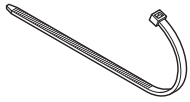	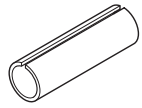 for gas pipe 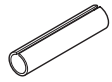 for liquid pipe

Name	Paper pattern for installation	Installation and Owner's manual
Quantity	1EA	1EA
Shape		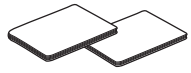

⚠ CAUTION

• Use only those accessories (Standard or optional) which have designated specifications.

MULTI V™ Indoor unit

Ceiling Cassette 2-Way

1. List of functions
2. Specifications
3. Dimensions
4. Piping Diagrams
5. Wiring Diagrams
6. Capacity Tables
7. Air Velocity and Temperature Distribution
8. Electric Characteristics
9. Sound Levels
10. Installation
11. Accessories

1. List of functions

Category	Function	ARNU09GTL*4, ARNU12GTL*4 ARNU18GTL*4, ARNU24GTL*4
Air flow	Air supply outlet	2
	Airflow direction control(left & right)	-
	Airflow direction control(up & down)	Auto
	Auto swing(left & right)	-
	Auto swing(up & down)	O
	Airflow steps(fan/cool/heat)	4 / 5 / 4
	Chaos swing	X
	Chaos wind(auto wind)	O
	Jet cool(Power wind)	O
	Swirl wind	-
Air purifying	Deodorizing filter	X
	Plasma air purifier	O(C4 Model only), X(A4 Model)
	Prefilter(washable / anti-fungus)	O
Installation	Drain pump	O
	E.S.P. control	X
	Electric heater(operation)	X
	High ceiling operation	O
Reliability	Hot start	O
	Self diagnosis	O
	Soft dry operation	O
Convenience	Auto changeover	O(Heat recovery)
	Auto cleaning	X
	Auto operation(artificial intelligence)	O(Heat pump or Cooling only)
	Auto restart operation	O
	Child lock	O
	Forced operation	O
	Group control	O
	Sleep mode	O
	Timer(on/off)	O
	Timer(weekly)	O
	Two thermistor control	O
	External On/Off	O
Individual control	Wide wired remote controller (RS2)	PQRCVSL0/PQRCVSL0QW
	Wide wired remote controller (RS2 Plus)	PREMTB001/PREMTBB01
	Premium wired remote controller	PREMTA000/PREMTA000A/PREMTA000B
	Simple wired remote controller	PQRCVCL0Q(W)
	Wired remote controller(for hotel use)	PQRCHCA0Q(W)
	Wireless LCD remote control	PQWRH(C)Q0FDB
Special function kit	Zone control	-
	CTIE	-
	Electro thermostat	-
	Remote temperature sensor	PQRSTA0
	Group control wire	PZCWRCG3
	Dry contact	PDRYCB000/PDRYCB100/PDRYCB300/PDRYCB400/PDRYCB500

O : Applied X : Not applied – : No relation

Option : Model name & price are different according to options, and assembled in factory with main unit.

Accessory : Installed at field, ordered and purchased separately by the corresponding model name, supplied with separate package.

2. Specifications

* Model Name
A:Basic, C:Plasma

Type			2Way Ceiling Cassette	
Model		Unit	ARNU09GTL*4	ARNU12GTL*4
Cooling Capacity		kW	2.8	3.6
		kcal/h	2,400	3,100
		Btu/h	9,600	12,300
Heating Capacity		kW	3.2	4.0
		kcal/h	2,800	3,400
		Btu/h	10,900	13,600
Casing			Galvanized Steel Plate	Galvanized Steel Plate
Dimensions (WxHxD)	Body	mm	830 x 225 x 550	830 x 225 x 550
		inch	32-11/16 x 8-27/32 x 21-21/32	32-11/16 x 8-27/32 x 21-21/32
	Front Panel	mm	1,050 x 28 x 640	1,050 x 28 x 640
		inch	41-11/32 x 1-3/32 x 25-3/16	41-11/32 x 1-3/32 x 25-3/16
Coil	Rows x Columns x FPI		2 x 11 x 20	2 x 11 x 20
	Face Area	m^2	0.13	0.13
Fan	Type		Cross Flow Fan	Cross Flow Fan
	Motor Output x Number	W	20 x 2	20 x 2
	Running Current	A	0.18 x 2	0.18 x 2
	Air Flow Rate(H / M / L)	CMM	9 / 8 / 7	10 / 9 / 8
		cfm	318 / 283 / 247	353 / 318 / 283
	Drive		Direct	Direct
	Motor type		BLDC	BLDC
Temperature Control			Microprocessor, Thermostat for cooling and heating	Microprocessor, Thermostat for cooling and heating
Sound Absorbing Thermal Insulation Material			Foamed polystrene	Foamed polystrene
Safety Device			Fuse	Fuse
Pipe Connections	Liquid Side	mm(inch)	Ø6.35 (1/4)	Ø6.35 (1/4)
	Gas Side	mm(inch)	Ø12.7 (1/2)	Ø12.7 (1/2)
	Drain Pipe(Internal Dia.)	mm(inch)	25 (1)	25 (1)
Net Weight	Body	kg(lbs)	20.6(45.4)	20.6(45.4)
Noise Level(Sound Press, 1.5m, H / M / L)		dB(A)	36 / 34 / 32	38 / 36 / 32
Power Supply		Ø, V, Hz	1, 220-240, 50	1, 220-240, 50
			1, 220, 60	1, 220, 60
Refrigerant Control			EEV	EEV
Transmission cable			CVV-SB 1.0~1.5 x 2C	CVV-SB 1.0~1.5 x 2C
Panel Color			Morning fog	Morning fog
Panel Name(Accessory)			PT-HL*	PT-HL*

Notes:

1. Capacities are based on the following conditions:
   - Cooling
     - Indoor temp. 27°C[80.6°F]DB/ 19°C[66.2°F]WB
     - Outdoor temp. 35°C[95°F]DB/ 24°C[75.2°F]WB
     - Interconnecting Piping Length 7.5m
     - Level Difference of Zero
   - Heating
     - Indoor temp. 20°C[68°F]DB/ 15°C[59°F]WB
     - Outdoor temp. 7°C[44.6°F]DB/ 6°C[42.8°F]WB
     - Interconnecting Piping Length 7.5m
     - Level Difference of Zero
2. Capacities are Net Capacities
3. Due to our policy of innovation some specifications may be changed without prior notification
4. Wiring cable size must comply with the applicable local and national codes. And “Electric characteristics” chapter should be considered for electrical work and design. Especially the power cable and circuit breaker should be selected in accordance with that.
5. EEV: Electronic Expansion Valve
6. Anechoic chamber conversion value is measured at 1.5 m downward from unit centre.
   The values depends on the ambient conditions and values are normally higher in actual operation.

Conversion Formula
kcal/h= kW x 860
Btu/h = kW x 3412
cfm = m^3/min x 35.3
l/s = CMM x 1000/60

2. Specifications

* Model Name
A:Basic, C:Plasma

Type			2Way Ceiling Cassette	
Model		Unit	ARNU18GTL*4	ARNU24GTL*4
Cooling Capacity		kW	5.6	7.1
		kcal/h	4,800	6,100
		Btu/h	19,100	24,200
Heating Capacity		kW	6.3	8.0
		kcal/h	5,400	6,900
		Btu/h	21,500	27,300
Casing			Galvanized Steel Plate	Galvanized Steel Plate
Dimensions (WxHxD)	Body	mm	830 x 225 x 550	830 x 225 x 550
		inch	32-11/16 x 8-27/32 x 21-21/32	32-11/16 x 8-27/32 x 21-21/32
	Front Panel	mm	1,050 x 28 x 640	1,050 x 28 x 640
		inch	41-11/32 x 1-3/32 x 25-3/16	41-11/32 x 1-3/32 x 25-3/16
Coil	Rows x Columns x FPI		2 x 11 x 20	2 x 11 x 20
	Face Area	m^2	0.13	0.13
Fan	Type		Cross Flow Fan	Cross Flow Fan
	Motor Output x Number	W	20 x 2	20 x 2
	Running Current	A	0.18 x 2	0.18 x 2
	Air Flow Rate(H / M / L)	CMM	13 / 12 / 10	17 / 15 / 13
		cfm	459 / 424 / 353	601 / 530 / 459
	Drive		Direct	Direct
	Motor type		BLDC	BLDC
Temperature Control			Microprocessor, Thermostat for cooling and heating	Microprocessor, Thermostat for cooling and heating
Sound Absorbing Thermal Insulation Material			Foamed polystrene	Foamed polystrene
Safety Device			Fuse	Fuse
Pipe Connections	Liquid Side	mm(inch)	Ø6.35(1/4)	Ø9.52(3/8)
	Gas Side	mm(inch)	Ø12.7(1/2)	Ø15.88(5/8)
	Drain Pipe(Internal Dia.)	mm(inch)	25(1)	25(1)
Net Weight	Body	kg(lbs)	20.6(45.4)	20.6(45.4)
Noise Level(Sound Press, 1.5m, H / M / L)		dB(A)	40 / 36 / 32	42 / 38 / 34
Power Supply		Ø, V, Hz	1, 220-240, 50	1, 220-240, 50
			1, 220, 60	1, 220, 60
Refrigerant Control			EEV	EEV
Transmission cable			CVV-SB 1.0~1.5 x 2C	CVV-SB 1.0~1.5 x 2C
Panel Color			Morning fog	Morning fog
Panel Name(Accessory)			PT-HL*	PT-HL*

Notes:

1. Capacities are based on the following conditions:
   - Cooling
     - Indoor temp. 27°C[80.6°F]DB/ 19°C[66.2°F]WB
     - Outdoor temp. 35°C[95°F]DB/ 24°C[75.2°F]WB
     - Interconnecting Piping Length 7.5m
     - Level Difference of Zero
   - Heating
     - Indoor temp. 20°C[68°F]DB/ 15°C[59°F]WB
     - Outdoor temp. 7°C[44.6°F]DB/ 6°C[42.8°F]WB
     - Interconnecting Piping Length 7.5m
     - Level Difference of Zero
2. Capacities are Net Capacities
3. Due to our policy of innovation some specifications may be changed without prior notification
4. Wiring cable size must comply with the applicable local and national codes. And “Electric characteristics” chapter should be considered for electrical work and design. Especially the power cable and circuit breaker should be selected in accordance with that.
5. EEV: Electronic Expansion Valve
6. Anechoic chamber conversion value is measured at 1.5 m downward from unit centre.
   The values depends on the ambient conditions and values are normally higher in actual operation.

Conversion Formula
kcal/h= kW x 860
Btu/h = kW x 3412
cfm = m^3/min x 35.3
l/s = CMM x 1000/60

Ceiling Cassette 2-way

ARNU09GTL*4 ARNU18GTL*4
ARNU12GTL*4 ARNU24GTL*4



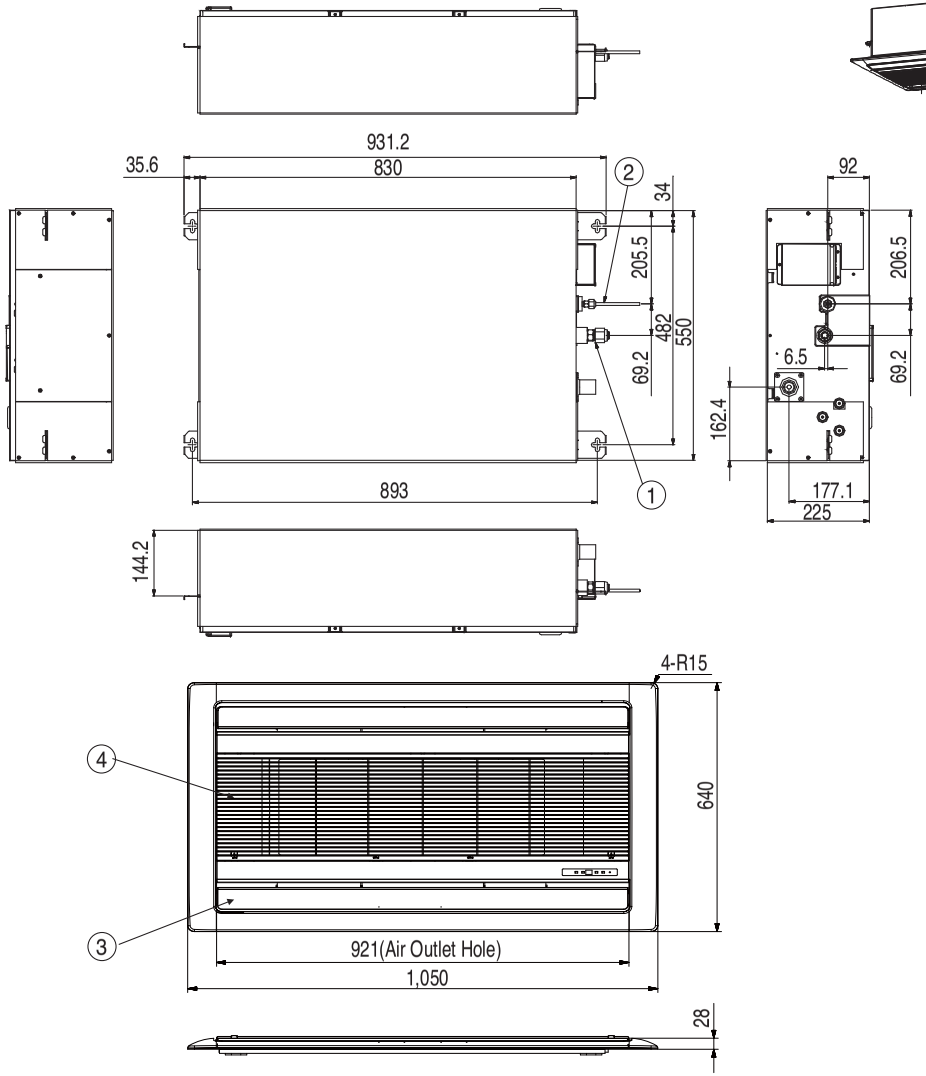

(unit : mm)

Number	Name	Descripition
1	Liquid pipe connection	Unit size(18k):ø6.35
		Unit size(24k):ø9.52
2	Gas pipe connection	Unit size(18k):ø12.7
		Unit size(24k):ø15.88
3	Air suction grill	
4	Air discharge grill	

■ Note

1. Unit should be installed in compliance with the installation manual in the product box.
2. Unit shall be grounded in accordance with the local regulations or applicable national codes.

4. Piping Diagrams

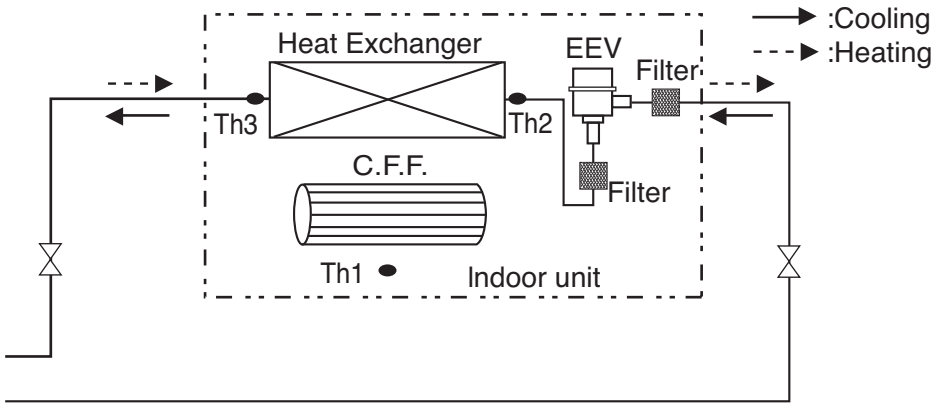

Refrigerant pipe connection port diameter

[Unit: mm(inch)]

Model	Gas	Liquid
ARNU09GTL*4	Ø12.7(1/2)	Ø6.35(1/4)
ARNU12GTL*4	Ø12.7(1/2)	Ø6.35(1/4)
ARNU18GTL*4	Ø12.7(1/2)	Ø6.35(1/4)
ARNU24GTL*4	Ø15.88(5/8)	Ø9.52(3/8)

LOC.	Description
Th1	Room thermistor
Th2	Pipe in thermistor
Th3	Pipe out thermistor

5. Wiring Diagrams

TL Chassis

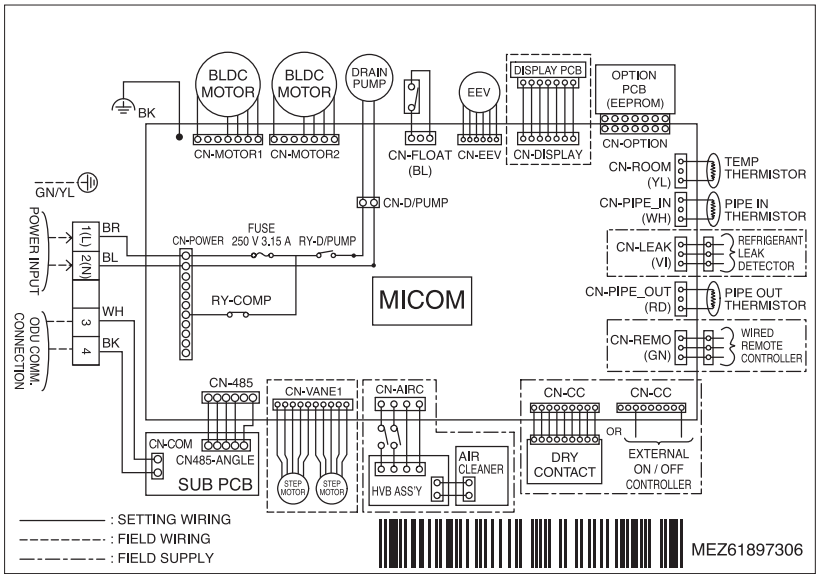

CONNECTOR NUMBER	SPEC	DESCRIPTION
CN-POWER	AC Power supply	AC Power line input for indoor controller
CN-MOTOR1	Fan motor output	Motor output of BLDC
CN-MOTOR2	Fan motor output	Motor output of BLDC
CN-D/PUMP	Drain pump output	AC output for drain pump
CN-485	Communication	Connection between indoor and outdoor
CN-DISP	Display	Display of indoor status
CN-EEV	EEV Output	EEV Control output
CN-VANE1	Step motor	Step motor output
CN-FLOAT	Float switch input	Float switch sensing
CN-PIPE/IN	Suction pipe sensor	Pipe in thermistor
CN-PIPE/OUT	Discharge pipe sensor	Pipe out thermistor
CN-ROOM	Room sensor	Room air thermistor
CN-REMO	Remote controller	Remote control line
CN-EXT	External On/Off	External On/Off signal input

Dip Switch Setting		Off	On	Remarks
SW3	GROUP	Master	Slave	Group Control setting using Wired Remote Controller
SW4	DRY CONTACT	Variable	Auto	Old Dry Contact Mode Setting 1. Variable : Auto/Manual Mode can be chosen by Wide wired remote controller or Wireless remote controller (When shipped from Factory → Manual Mode) 2. Auto : For Dry Contact, it is always Auto mode.
SW5	EXTRA 1	Off	On	1. Duct model -. OFF : Default(not operate continuosly) -. ON : Fan operate continuosly 2. Cassette Model : No Function 3. Ceiling Suspended Model -. OFF : Ceiling(default) -. ON : Floor

⚠ CAUTION

For Multi V Model, Dip Switch 1,2,6,7,8 must be set OFF
That dip switch is used for the other model.

6. Capacity Tables

6.1 Cooling Capacity

Cooling capacity

Capacity Index	Outdoor air temp. (DB, °C)	Indoor air temp. (DB/WB, °C)													
		20		23		26		27		28		30		32	
		14		16		18		19		20		22		24	
		TC	SHC	TC	SHC	TC	SHC	TC	SHC	TC	SHC	TC	SHC	TC	SHC
		kW	kW	kW	kW	kW	kW	kW	kW	kW	kW	kW	kW	kW	kW
2.8	10	1.9	1.9	2.2	2.2	2.6	2.4	2.8	2.4	3.0	2.5	3.4	2.6	3.7	2.5
	12	1.9	1.9	2.2	2.2	2.6	2.4	2.8	2.4	3.0	2.5	3.4	2.6	3.6	2.5
	14	1.9	1.9	2.2	2.2	2.6	2.4	2.8	2.4	3.0	2.5	3.4	2.6	3.6	2.5
	16	1.9	1.9	2.2	2.2	2.6	2.4	2.8	2.4	3.0	2.5	3.4	2.6	3.5	2.5
	18	1.9	1.9	2.2	2.2	2.6	2.4	2.8	2.4	3.0	2.5	3.4	2.6	3.5	2.5
	20	1.9	1.9	2.2	2.2	2.6	2.4	2.8	2.4	3.0	2.5	3.4	2.6	3.4	2.4
	21	1.9	1.9	2.2	2.2	2.6	2.4	2.8	2.4	3.0	2.5	3.4	2.6	3.4	2.4
	23	1.9	1.9	2.2	2.2	2.6	2.4	2.8	2.4	3.0	2.5	3.4	2.6	3.4	2.4
	25	1.9	1.9	2.2	2.2	2.6	2.4	2.8	2.4	3.0	2.5	3.3	2.5	3.3	2.3
	27	1.9	1.9	2.2	2.2	2.6	2.4	2.8	2.4	3.0	2.5	3.2	2.5	3.3	2.3
	29	1.9	1.9	2.2	2.2	2.6	2.4	2.8	2.4	3.0	2.5	3.2	2.5	3.2	2.3
	31	1.9	1.9	2.2	2.2	2.6	2.4	2.8	2.4	3.0	2.5	3.2	2.4	3.2	2.2
	33	1.9	1.9	2.2	2.2	2.6	2.4	2.8	2.4	3.0	2.5	3.1	2.4	3.1	2.2
	35	1.9	1.9	2.2	2.2	2.6	2.4	2.8	2.4	3.0	2.5	3.0	2.4	3.1	2.2
	37	1.9	1.9	2.2	2.2	2.6	2.4	2.8	2.4	2.9	2.4	3.0	2.3	3.0	2.1
	39	1.9	1.9	2.2	2.2	2.6	2.4	2.8	2.4	2.8	2.4	2.9	2.3	3.0	2.1
3.6	10	2.4	2.4	2.9	2.6	3.3	2.8	3.6	2.9	3.9	3.0	4.3	3.1	4.7	3.0
	12	2.4	2.4	2.9	2.6	3.3	2.8	3.6	2.9	3.9	3.0	4.3	3.1	4.7	3.0
	14	2.4	2.4	2.9	2.6	3.3	2.8	3.6	2.9	3.9	3.0	4.3	3.1	4.6	3.0
	16	2.4	2.4	2.9	2.6	3.3	2.8	3.6	2.9	3.9	3.0	4.3	3.1	4.6	2.9
	18	2.4	2.4	2.9	2.6	3.3	2.8	3.6	2.9	3.9	3.0	4.3	3.1	4.5	2.9
	20	2.4	2.4	2.9	2.6	3.3	2.8	3.6	2.9	3.9	3.0	4.3	3.1	4.4	2.9
	21	2.4	2.4	2.9	2.6	3.3	2.8	3.6	2.9	3.9	3.0	4.3	3.1	4.4	2.9
	23	2.4	2.4	2.9	2.6	3.3	2.8	3.6	2.9	3.9	3.0	4.3	3.1	4.3	2.8
	25	2.4	2.4	2.9	2.6	3.3	2.8	3.6	2.9	3.9	3.0	4.3	3.0	4.3	2.8
	27	2.4	2.4	2.9	2.6	3.3	2.8	3.6	2.9	3.9	3.0	4.2	3.0	4.2	2.8
	29	2.4	2.4	2.9	2.6	3.3	2.8	3.6	2.9	3.9	3.0	4.1	2.9	4.2	2.7
	31	2.4	2.4	2.9	2.6	3.3	2.8	3.6	2.9	3.9	3.0	4.1	2.9	4.1	2.7
	33	2.4	2.4	2.9	2.6	3.3	2.8	3.6	2.9	3.9	3.0	4.0	2.9	4.0	2.6
	35	2.4	2.4	2.9	2.6	3.3	2.8	3.6	2.9	3.9	3.0	3.9	2.8	4.0	2.6
	37	2.4	2.4	2.9	2.6	3.3	2.8	3.6	2.9	3.8	2.9	3.8	2.8	3.9	2.5
	39	2.4	2.4	2.9	2.6	3.3	2.8	3.6	2.9	3.7	2.8	3.8	2.7	3.9	2.5

Notes:
TC: Total Capacity(kW)
SHC: Sensible Heat Capacity(kW)
1. Capacity tables show the representative value of conditions which may occur.
2. Refer to Capacity Correction Factor in the outdoor unit PDB for the actual performance data of each indoor unit and outdoor unit combination.

6. Capacity Tables

Cooling capacity

Capacity Index	Outdoor air temp. (DB, °C)	Indoor air temp. (DB/WB, °C)													
		20		23		26		27		28		30		32	
		14		16		18		19		20		22		24	
		TC	SHC	TC	SHC	TC	SHC	TC	SHC	TC	SHC	TC	SHC	TC	SHC
		kW	kW	kW	kW	kW	kW	kW	kW	kW	kW	kW	kW	kW	kW
5.6	10	3.8	3.2	4.5	3.6	5.2	3.9	5.6	3.9	6.0	4.0	6.7	4.2	7.4	4.2
	12	3.8	3.2	4.5	3.6	5.2	3.9	5.6	3.9	6.0	4.0	6.7	4.2	7.3	4.1
	14	3.8	3.2	4.5	3.6	5.2	3.9	5.6	3.9	6.0	4.0	6.7	4.2	7.2	4.1
	16	3.8	3.2	4.5	3.6	5.2	3.9	5.6	3.9	6.0	4.0	6.7	4.2	7.1	4.0
	18	3.8	3.2	4.5	3.6	5.2	3.9	5.6	3.9	6.0	4.0	6.7	4.2	7.0	4.0
	20	3.8	3.2	4.5	3.6	5.2	3.9	5.6	3.9	6.0	4.0	6.7	4.2	6.9	3.9
	21	3.8	3.2	4.5	3.6	5.2	3.9	5.6	3.9	6.0	4.0	6.7	4.2	6.8	3.9
	23	3.8	3.2	4.5	3.6	5.2	3.9	5.6	3.9	6.0	4.0	6.7	4.2	6.7	3.8
	25	3.8	3.2	4.5	3.6	5.2	3.9	5.6	3.9	6.0	4.0	6.6	4.2	6.6	3.8
	27	3.8	3.2	4.5	3.6	5.2	3.9	5.6	3.9	6.0	4.0	6.4	4.1	6.6	3.7
	29	3.8	3.2	4.5	3.6	5.2	3.9	5.6	3.9	6.0	4.0	6.4	4.0	6.5	3.7
	31	3.8	3.2	4.5	3.6	5.2	3.9	5.6	3.9	6.0	4.0	6.3	3.9	6.4	3.6
	33	3.8	3.2	4.5	3.6	5.2	3.9	5.6	3.9	6.0	4.0	6.2	3.9	6.3	3.6
	35	3.8	3.2	4.5	3.6	5.2	3.9	5.6	3.9	6.0	4.0	6.0	3.8	6.2	3.5
	37	3.8	3.2	4.5	3.6	5.2	3.9	5.6	3.9	5.8	3.9	5.9	3.7	6.1	3.5
	39	3.8	3.2	4.5	3.6	5.2	3.9	5.6	3.9	5.7	3.9	5.8	3.7	6.0	3.4
7.1	10	4.8	4.1	5.7	4.5	6.6	4.9	7.1	5.0	7.6	5.1	8.5	5.3	9.3	5.3
	12	4.8	4.1	5.7	4.5	6.6	4.9	7.1	5.0	7.6	5.1	8.5	5.3	9.2	5.2
	14	4.8	4.1	5.7	4.5	6.6	4.9	7.1	5.0	7.6	5.1	8.5	5.3	9.1	5.2
	16	4.8	4.1	5.7	4.5	6.6	4.9	7.1	5.0	7.6	5.1	8.5	5.3	9.0	5.1
	18	4.8	4.1	5.7	4.5	6.6	4.9	7.1	5.0	7.6	5.1	8.5	5.3	8.8	5.0
	20	4.8	4.1	5.7	4.5	6.6	4.9	7.1	5.0	7.6	5.1	8.5	5.3	8.7	5.0
	21	4.8	4.1	5.7	4.5	6.6	4.9	7.1	5.0	7.6	5.1	8.5	5.3	8.7	4.9
	23	4.8	4.1	5.7	4.5	6.6	4.9	7.1	5.0	7.6	5.1	8.5	5.3	8.5	4.9
	25	4.8	4.1	5.7	4.5	6.6	4.9	7.1	5.0	7.6	5.1	8.4	5.3	8.4	4.8
	27	4.8	4.1	5.7	4.5	6.6	4.9	7.1	5.0	7.6	5.1	8.2	5.1	8.3	4.7
	29	4.8	4.1	5.7	4.5	6.6	4.9	7.1	5.0	7.6	5.1	8.1	5.1	8.2	4.7
	31	4.8	4.1	5.7	4.5	6.6	4.9	7.1	5.0	7.6	5.1	8.0	5.0	8.1	4.6
	33	4.8	4.1	5.7	4.5	6.6	4.9	7.1	5.0	7.6	5.1	7.8	4.9	7.9	4.5
	35	4.8	4.1	5.7	4.5	6.6	4.9	7.1	5.0	7.6	5.1	7.7	4.8	7.8	4.4
	37	4.8	4.1	5.7	4.5	6.6	4.9	7.1	5.0	7.4	5.0	7.5	4.7	7.7	4.4
	39	4.8	4.1	5.7	4.5	6.6	4.9	7.1	5.0	7.2	4.9	7.4	4.6	7.6	4.3

Notes:
TC: Total Capacity(kW)
SHC: Sensible Heat Capacity(kW)
1. Capacity tables show the representative value of conditions which may occur.
2. Refer to Capacity Correction Factor in the outdoor unit PDB for the actual performance data of each indoor unit and outdoor unit combination.

6. Capacity Tables

6.2 Heating Capacity

Heating capacity

Capacity Index	Outdoor air temp.		Indoor air temp. (DB, °C)					
			16	18	20	21	22	24
	DB(°C)	WB(°C)	TC	TC	TC	TC	TC	TC
			kW	kW	kW	kW	kW	kW
2.8	-24.8	-25.0	1.9	1.9	1.8	1.8	1.8	1.8
	-21.8	-22.0	2.2	2.2	2.2	2.2	2.2	2.2
	-19.8	-20.0	2.4	2.4	2.3	2.3	2.3	2.3
	-18.8	-19.0	2.4	2.4	2.4	2.4	2.4	2.4
	-16.7	-17.0	2.5	2.5	2.5	2.5	2.5	2.5
	-14.7	-15.0	2.7	2.7	2.6	2.6	2.6	2.6
	-12.6	-13.0	2.8	2.8	2.8	2.8	2.7	2.7
	-10.5	-11.0	2.9	2.9	2.9	2.9	2.9	2.8
	-9.5	-10.0	3.0	3.0	2.9	2.9	2.9	2.8
	-8.5	-9.1	3.0	3.0	3.0	3.0	3.0	2.8
	-7.0	-7.6	3.1	3.1	3.1	3.1	3.0	2.8
	-5.0	-5.6	3.2	3.2	3.2	3.1	3.0	2.8
	-3.0	-3.7	3.4	3.3	3.2	3.1	3.0	2.8
	0.0	-0.7	3.4	3.3	3.2	3.1	3.0	2.8
	3.0	2.2	3.5	3.4	3.2	3.1	3.0	2.8
	5.0	4.1	3.6	3.4	3.2	3.1	3.0	2.8
	7.0	6.0	3.6	3.4	3.2	3.1	3.0	2.8
	9.0	7.9	3.6	3.4	3.2	3.1	3.0	2.8
	11.0	9.8	3.6	3.4	3.2	3.1	3.0	2.8
	13.0	11.8	3.6	3.4	3.2	3.1	3.0	2.8
	15.0	13.7	3.6	3.4	3.2	3.1	3.0	2.8
3.6	-24.8	-25.0	2.3	2.3	2.3	2.3	2.3	2.3
	-21.8	-22.0	2.8	2.8	2.8	2.8	2.8	2.8
	-19.8	-20.0	2.9	2.9	2.9	2.9	2.9	2.9
	-18.8	-19.0	3.0	3.0	3.0	3.0	3.0	3.0
	-16.7	-17.0	3.1	3.1	3.1	3.1	3.1	3.1
	-14.7	-15.0	3.3	3.3	3.3	3.3	3.3	3.3
	-12.6	-13.0	3.5	3.4	3.4	3.4	3.4	3.4
	-10.5	-11.0	3.6	3.6	3.6	3.6	3.6	3.5
	-9.5	-10.0	3.7	3.7	3.7	3.7	3.7	3.5
	-8.5	-9.1	3.8	3.8	3.7	3.7	3.7	3.5
	-7.0	-7.6	3.9	3.9	3.9	3.8	3.7	3.5
	-5.0	-5.6	4.0	4.0	4.0	3.9	3.7	3.5
	-3.0	-3.7	4.2	4.1	4.0	3.9	3.7	3.5
	0.0	-0.7	4.3	4.1	4.0	3.9	3.7	3.5
	3.0	2.2	4.4	4.3	4.0	3.9	3.7	3.5
	5.0	4.1	4.5	4.3	4.0	3.9	3.7	3.5
	7.0	6.0	4.5	4.3	4.0	3.9	3.7	3.5
	9.0	7.9	4.5	4.3	4.0	3.9	3.7	3.5
	11.0	9.8	4.5	4.3	4.0	3.9	3.7	3.5
	13.0	11.8	4.5	4.3	4.0	3.9	3.7	3.5
	15.0	13.7	4.5	4.3	4.0	3.9	3.7	3.5

Notes:

TC: Total Capacity(kW)

1. Capacity tables show the representative value of conditions which may occur.
2. is shown as reference. When selecting the outdoor units, avoid the outdoor air temperature range shown by .
3. In accordance with operation limits of outdoor unit, applicable range of capacity tables is different.
4. Refer to Capacity Correction Factor in the outdoor unit PDB for the actual performance data of each indoor unit and outdoor unit combination.

6. Capacity Tables

Heating capacity

Capacity Index	Outdoor air temp.		Indoor air temp. (DB, °C)					
			16	18	20	21	22	24
	DB(°C)	WB(°C)	TC	TC	TC	TC	TC	TC
			kW	kW	kW	kW	kW	kW
5.6	-24.8	-25.0	3.6	3.6	3.6	3.6	3.6	3.6
	-21.8	-22.0	4.4	4.4	4.4	4.4	4.4	4.4
	-19.8	-20.0	4.6	4.6	4.6	4.6	4.6	4.6
	-18.8	-19.0	4.8	4.7	4.7	4.7	4.7	4.7
	-16.7	-17.0	5.0	5.0	5.0	4.9	4.9	4.9
	-14.7	-15.0	5.2	5.2	5.2	5.2	5.2	5.2
	-12.6	-13.0	5.5	5.4	5.4	5.4	5.4	5.4
	-10.5	-11.0	5.7	5.7	5.7	5.7	5.7	5.5
	-9.5	-10.0	5.8	5.8	5.8	5.8	5.8	5.5
	-8.5	-9.1	5.9	5.9	5.9	5.9	5.9	5.5
	-7.0	-7.6	6.1	6.1	6.1	6.0	5.9	5.5
	-5.0	-5.6	6.3	6.3	6.3	6.1	5.9	5.5
	-3.0	-3.7	6.6	6.5	6.3	6.1	5.9	5.5
	0.0	-0.7	6.7	6.5	6.3	6.1	5.9	5.5
	3.0	2.2	6.9	6.7	6.3	6.1	5.9	5.5
	5.0	4.1	7.0	6.7	6.3	6.1	5.9	5.5
	7.0	6.0	7.1	6.7	6.3	6.1	5.9	5.5
	9.0	7.9	7.1	6.7	6.3	6.1	5.9	5.5
	11.0	9.8	7.1	6.7	6.3	6.1	5.9	5.5
	13.0	11.8	7.1	6.7	6.3	6.1	5.9	5.5
	15.0	13.7	7.1	6.7	6.3	6.1	5.9	5.5
7.1	-24.8	-25.0	4.6	4.6	4.6	4.6	4.6	4.6
	-21.8	-22.0	5.6	5.6	5.6	5.6	5.6	5.5
	-19.8	-20.0	5.9	5.9	5.9	5.9	5.9	5.8
	-18.8	-19.0	6.0	6.0	6.0	6.0	6.0	6.0
	-16.7	-17.0	6.3	6.3	6.3	6.3	6.3	6.3
	-14.7	-15.0	6.6	6.6	6.6	6.6	6.6	6.6
	-12.6	-13.0	6.9	6.9	6.9	6.9	6.9	6.9
	-10.5	-11.0	7.2	7.2	7.2	7.2	7.2	7.0
	-9.5	-10.0	7.4	7.4	7.3	7.3	7.3	7.0
	-8.5	-9.1	7.5	7.5	7.5	7.5	7.5	7.0
	-7.0	-7.6	7.7	7.7	7.7	7.7	7.5	7.0
	-5.0	-5.6	8.0	8.0	8.0	7.7	7.5	7.0
	-3.0	-3.7	8.4	8.2	8.0	7.7	7.5	7.0
	0.0	-0.7	8.6	8.3	8.0	7.7	7.5	7.0
	3.0	2.2	8.8	8.5	8.0	7.7	7.5	7.0
	5.0	4.1	8.9	8.5	8.0	7.7	7.5	7.0
	7.0	6.0	9.0	8.5	8.0	7.7	7.5	7.0
	9.0	7.9	9.0	8.5	8.0	7.7	7.5	7.0
	11.0	9.8	9.0	8.5	8.0	7.7	7.5	7.0
	13.0	11.8	9.0	8.5	8.0	7.7	7.5	7.0
	15.0	13.7	9.0	8.5	8.0	7.7	7.5	7.0

Notes:

TC: Total Capacity(kW)

1. Capacity tables show the representative value of conditions which may occur.
2. is shown as reference. When selecting the outdoor units, avoid the outdoor air temperature range shown by .
3. In accordance with operation limits of outdoor unit, applicable range of capacity tables is different.
4. Refer to Capacity Correction Factor in the outdoor unit PDB for the actual performance data of each indoor unit and outdoor unit combination.

7. Air Velocity and Temperature Distribution(Reference Data)

ARNU09GTL*4

Cooling

Discharge angle: 40°

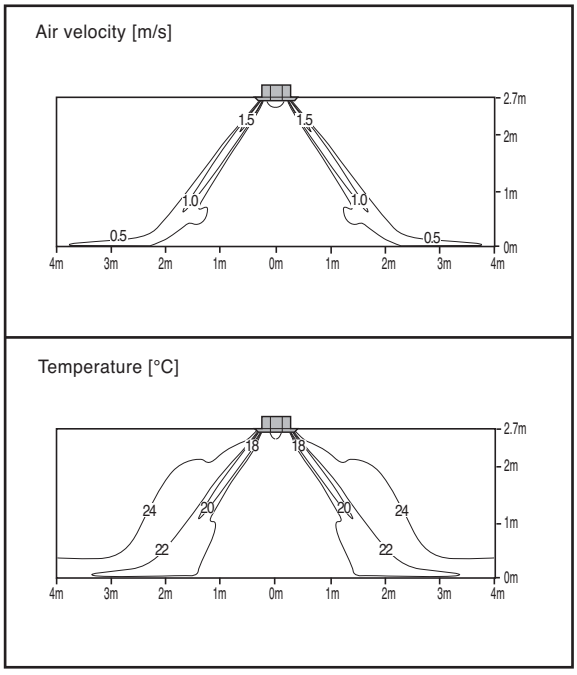

Heating

Discharge angle: 60°

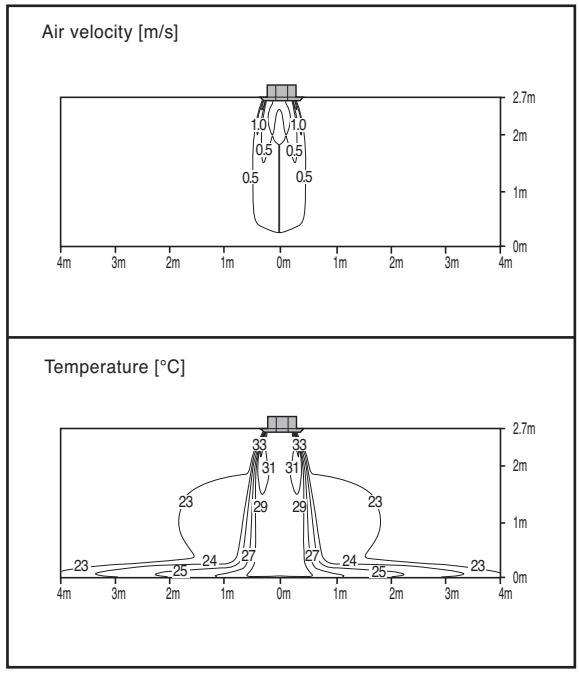

ARNU12GTL*4

Cooling

Discharge angle: 40°

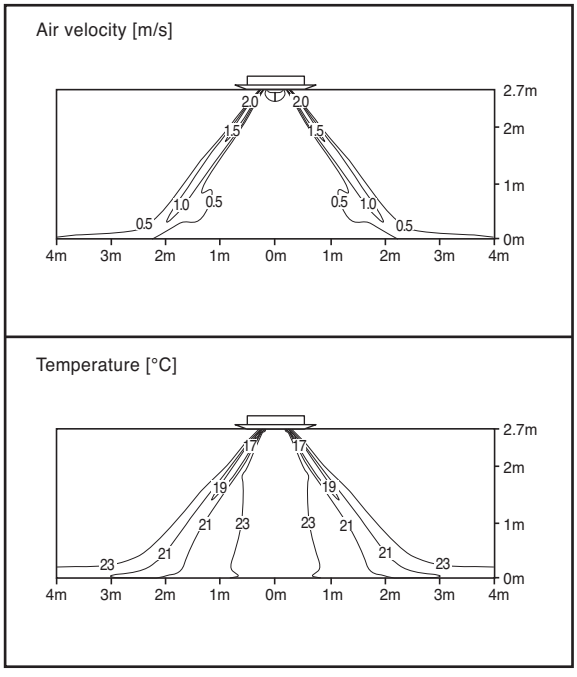

Heating

Discharge angle: 60°

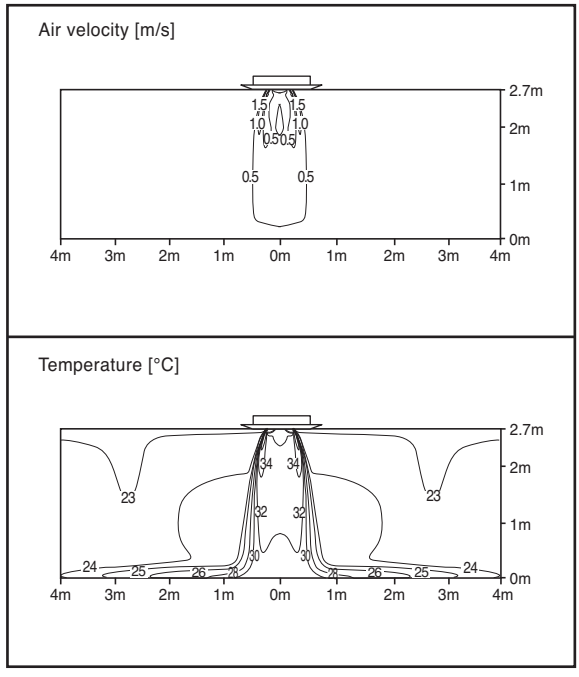

Note: The standard setup height is 2.7m. Shown here is the measurement distribution at the ceiling height of 2.7m
Fan operating mode is high.

7. Air Velocity and Temperature Distribution(Reference Data)

ARNU18GTL*4

Cooling

Discharge angle: 40°

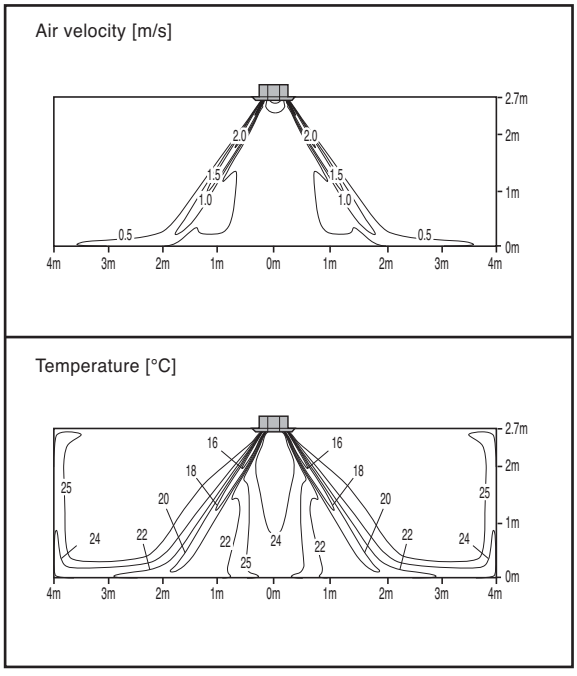

Heating

Discharge angle: 60°

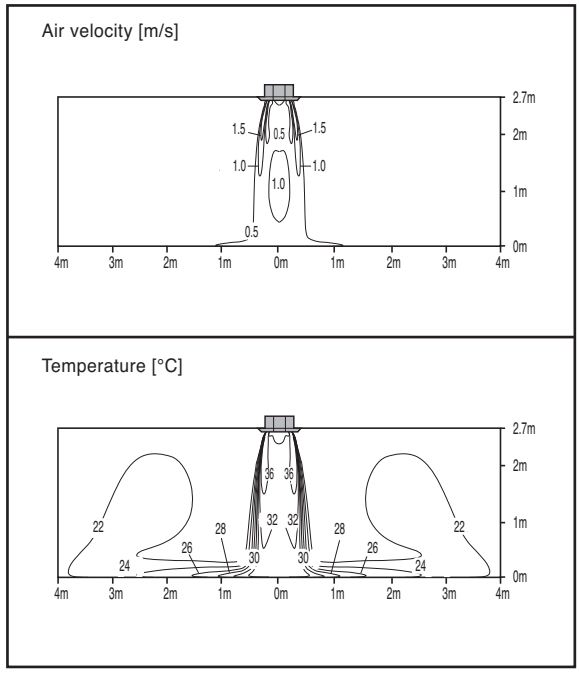

ARNU24GTL*4

Cooling

Discharge angle: 40°

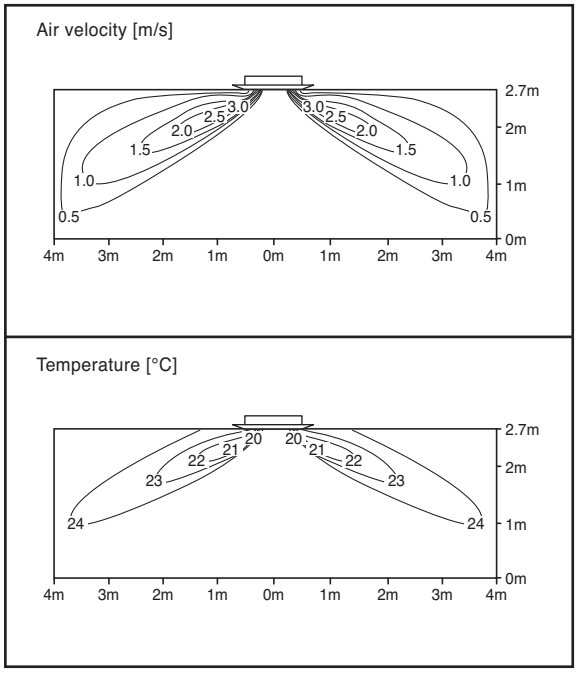

Heating

Discharge angle: 60°

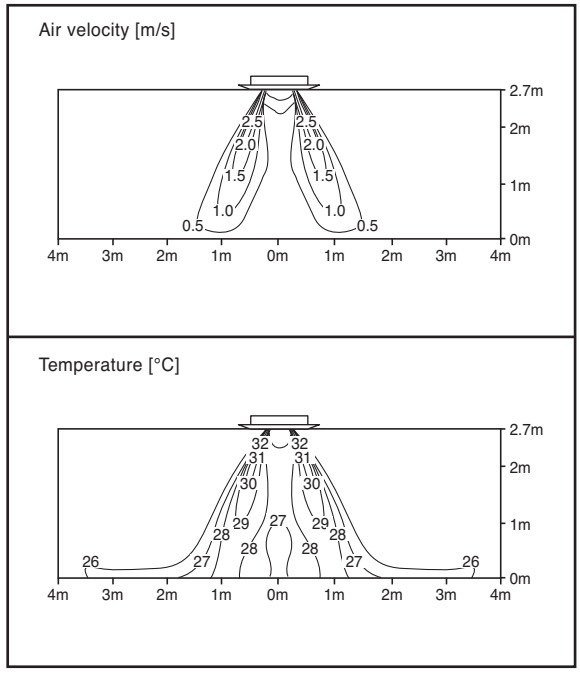

Note: The standard setup height is 2.7m. Shown here is the measurement distribution at the ceiling height of 2.7m
Fan operating mode is high.

8. Electric Characteristics

Units					Power Supply		IFM		Input(W)	
Model	Type	Hz	Volts	Voltage Range	MCA	MFA	kW	FLA	Cooling	Heating
ARNU09GTL*4	TL	50	220-240	Max:264 Min:198	0.47	15	0.04	0.37	70	70
ARNU12GTL*4	TL				0.47	15	0.04	0.37	70	70
ARNU18GTL*4	TL				0.47	15	0.04	0.37	70	70
ARNU24GTL*4	TL				0.47	15	0.04	0.37	70	70
ARNU09GTL*4	TL	60	220	Max:242 Min:198	0.47	15	0.04	0.37	70	70
ARNU12GTL*4	TL				0.47	15	0.04	0.37	70	70
ARNU18GTL*4	TL				0.47	15	0.04	0.37	70	70
ARNU24GTL*4	TL				0.47	15	0.04	0.37	70	70

Symbols:

MCA : Minimum Circuit Amperes (A)

MFA : Maximum Fuse Amperes(see note 5)

kW : Fan Motor Rated Output(kW)

FLA : Full Load Amperes(A)

IFM : Indoor Fan Motor

Note :

1. Voltage Range
   Units are suitable for use on electrical system where voltage supplied to unit terminals is not below or above the listed range limits.
2. Maximum allowable voltage unbalance between phase is 2%.
3. MCA/MFA
   MCA = 1.25 x FLA
   MFA ≤ 4 x FLA
   (Next lower standard fuse rating. Minimum 15A)
4. Select wire size based on the larger value on the MCA.
5. Instead of fuse, use Circuit Breaker.

9. Sound Levels

9.1 Sound Pressure Levels

Overall

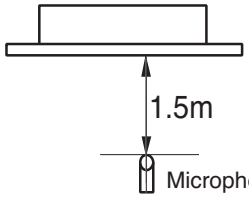

❊ Measuring place : Anechoic chamber

Notes:

1. Sound measured at 1.5m away from the center of the unit
2. Operating conditionl
   - Power source : 220-240V 50Hz / 220V 60Hz
   - Cooling : Indoor temperature (27°C DB, 19°C WB), Outdoor temperature (35°C DB, 24°C WB)
   - Heating : Indoor temperature (20°C DB, 15°C WB), Outdoor temperature (7°C DB, 6°C WB)
3. Reference accoustic pressure 0dB = 20μPa
4. Sound level will vary depending on a range of factors such as the construction(acoustic absorption coefficient) of particular room in which the equipment in installed.

Model	Sound Pressure Levels dB(A)		
	H	M	L
ARNU09GTL*4	36	34	32
ARNU12GTL*4	38	36	32
ARNU18GTL*4	40	36	32
ARNU24GTL*4	42	38	34

ARNU09GTL*4

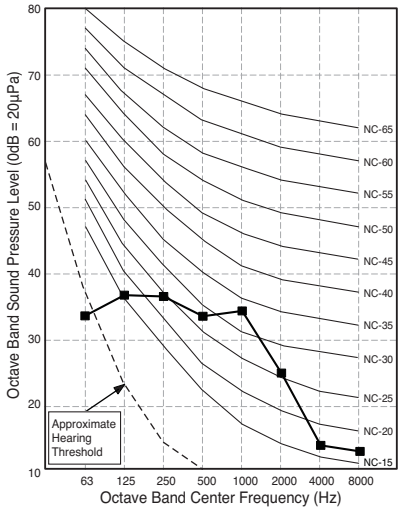

ARNU12GTL*4

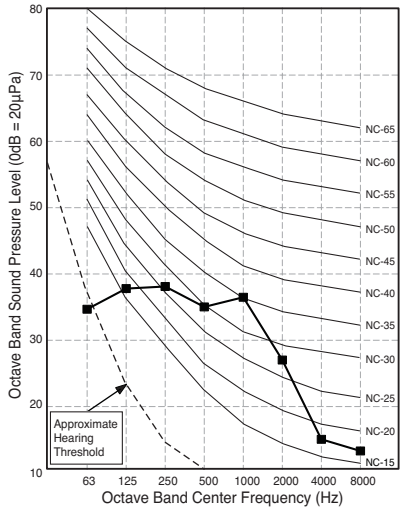

ARNU18GTL*4

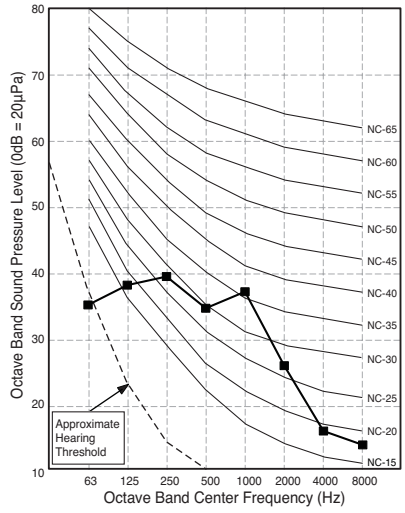

ARNU24GTL*4

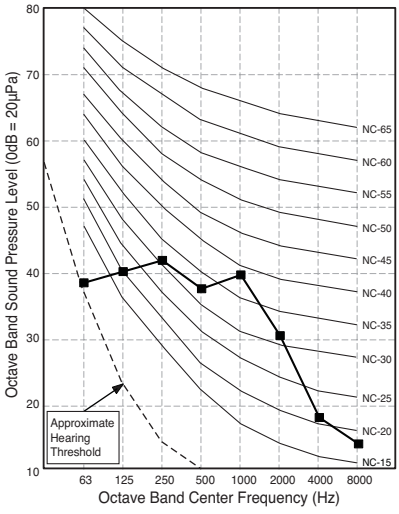

9. Sound Levels

9.2 Sound Power Levels

Model	Sound Power Levels dB(A)
	High Fan Speed
ARNU09GTL*4	55.0
ARNU12GTL*4	58.0
ARNU18GTL*4	59.0
ARNU24GTL*4	61.0

Notes:
- Data is valid at diffuse field condition
- Data is valid at nominal operating condition
- Sound level can be increased in static pressure mode or used air guide.
- Sound power level is measured on the rated condition in the reverberation rooms.
- Sound level will vary depending on a range of factors such as the construction (acoustic absorption coefficient) of particular room in which the equipment in installed.
- Reference acoustic intensity 0dB = 10E-6μW/m²

ARNU09GTL*4

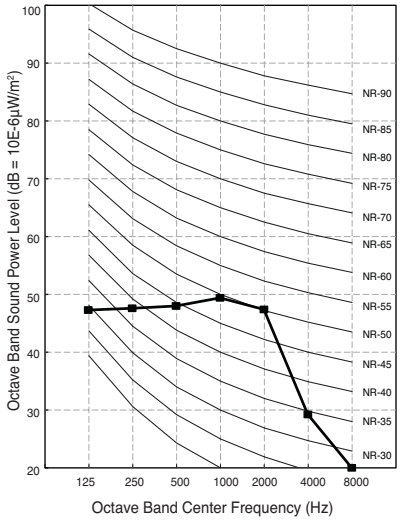

ARNU12GTL*4

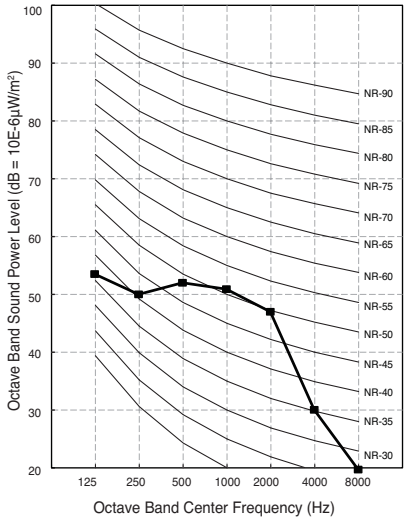

ARNU18GTL*4

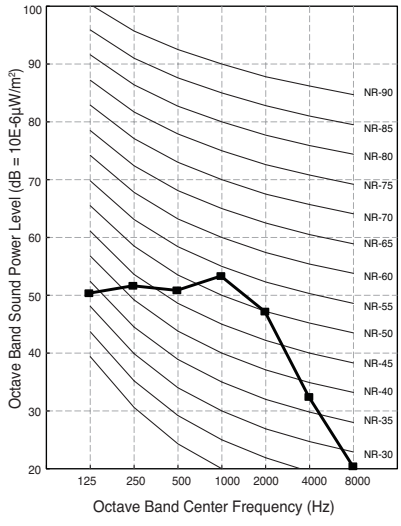

ARNU24GTL*4

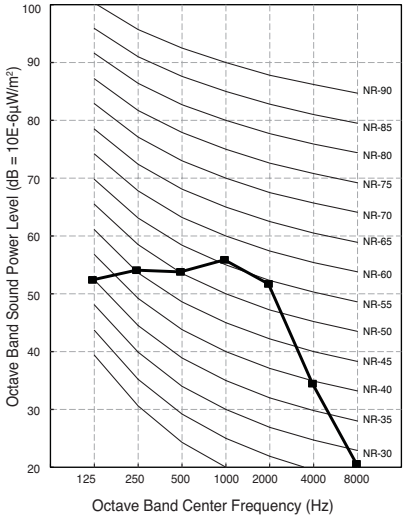

10. Installation

- Please read the instruction sheets completely before installing the product.
- When the power cord is damaged, replacement work shall be performed by authorized personnel only.
- Installation work must be performed in accordance with the national wiring standards by authorized personnel only.

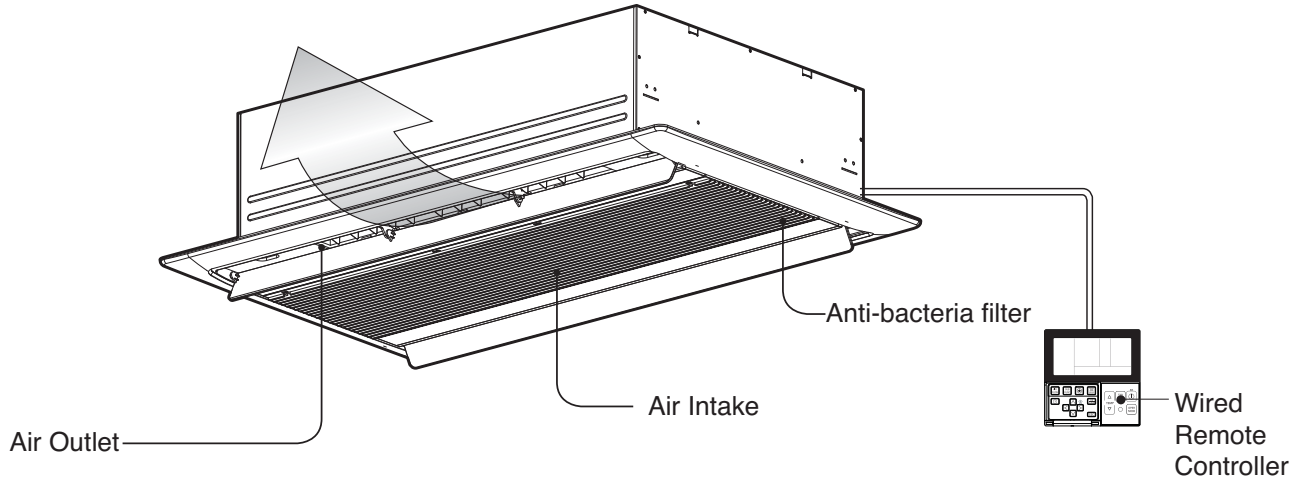

Required Parts

- Connecting cable
- Pipes: Gas side
  Liquid side
- Hanging Bolt
  (W 3/8 or M10 length 650mm)
- Insulated drain hose
- Additional Drain hose

Required Tools

- Level
- Screw driver
- Electric drill
- Hole core drill
- Flaring Tool set
- Torque Wrenches
- Hexagonal Wrench
- Gas-leak detector
- Thermometer

10.1 Selection of the best location

- There should not be any heat source or steam near the unit.
- There should not be any obstacles to the air circulation.
- A place where air circulation in the room will be good.
- A place where drainage can be easily obtained.
- A place where noise prevention is taken into consideration.
- Do not install the unit near the door way.
- Ensure the spaces indicated by arrows from the wall, ceiling, or other obstacles.
- The indoor unit must have sufficient maintenance space.

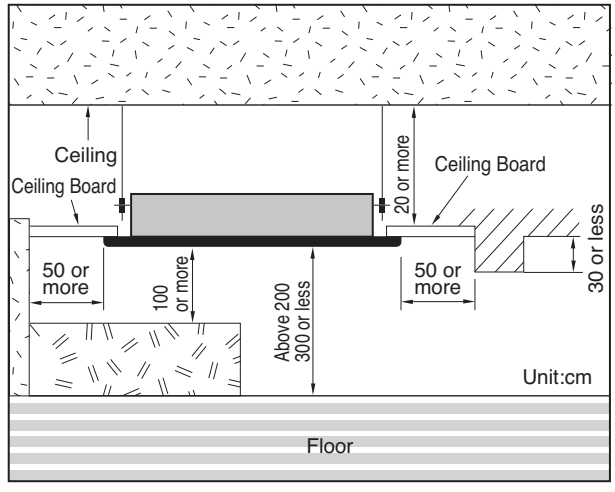

10.2 Ceiling opening dimensions and hanging bolt location

• The dimensions of the paper pattern for installation are the same as those of the ceiling opening dimensions.

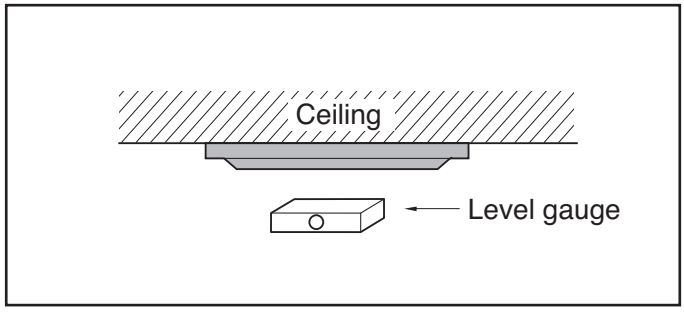

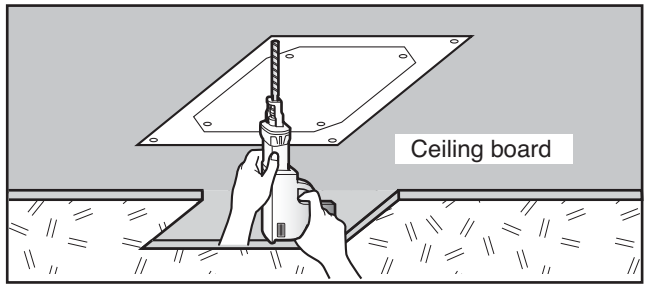

• Select and mark the position for fixing bolts and piping hole.
• Decide the position for fixing bolts slightly tilted to the drain direction after considering the direction of drain hose.
• Drill the hole for anchor bolt on the wall.

⚠ CAUTION

• This air-conditioner uses a drain pump.
• Install the unit horizontally using a level gauge.
• During the installation, care should be taken not to damage electric wires.

NOTE:

• Avoid the following installation location.

1. Such places as restaurants and kitchen where considerable amount of oil steam and flour is generated. These may cause heat exchange efficiency reduction, or water drops, drain pump mal-function. In these cases, take the following actions;
   • Make sure that ventilation fan is enough to cover all noxious gases from this place.
   • Ensure enough distance from the cooking room to install the air conditioner in such a place where it may not suck oily steam.

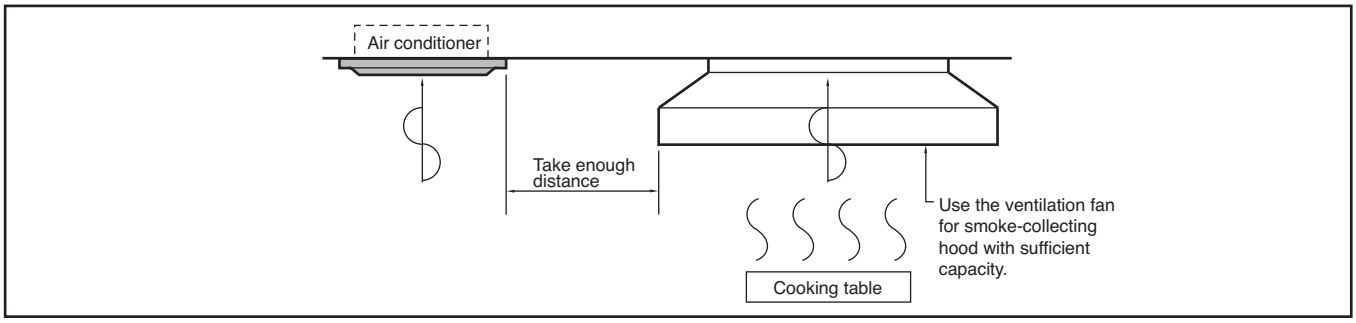

2. Avoid installng air conditioner in such places where cooking oil or iron powder is generated.
3. Avoid places where inflammable gas is generated.
4. Avoid place where noxious gas is generated.
5. Avoid places near high frequency generators.

10. Installation

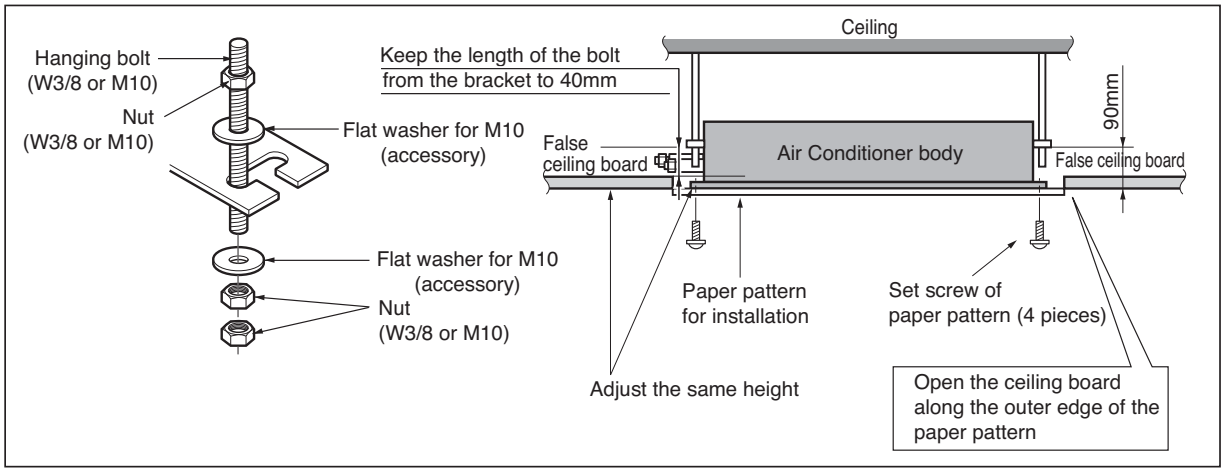

- The following parts are locally purchased.
  ① Hanging Bolt - W 3/8 or M10
  ② Nut - W 3/8 or M10
  ③ Spring Washer - M10
  ④ Plate Washer - M10

⚠ CAUTION

- Tighten the nut and bolt to prevent the unit from falling.

10.3 Wiring Connection

Connect the wires to the terminals on the control board individually according to the outdoor unit connection.

- Ensure that the color of the wires of outdoor unit and the terminal No. are the same as those of indoor unit respectively.

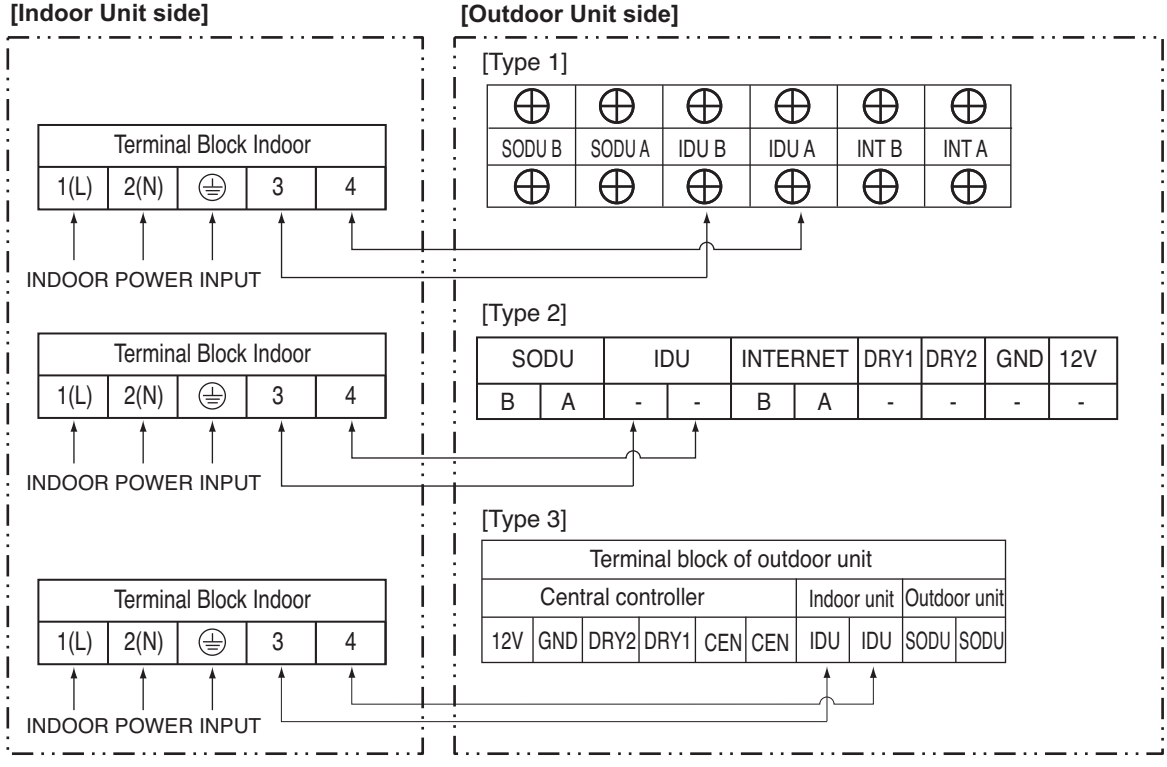

⚠ WARNING

Make sure that the screws of the terminal are not loose.

10.4 Installation of Decoration Panel

The decoration panel has its installation direction.

Before installing the decoration panel, always remove the paper template.

1. Temporarily fix two decoration panel fixing screws (hexagon M5 screw) on the unit body. (Tighten by amount 10mm in length.)
   The fixing screws (hexagon M5 screw) are included in the indoor unit box.
2. Remove the air inlet grille from the decoration panel. (Remove the hook for the air inlet grille cord.)
3. Hook the decoration panel key hole (⊂⊃) on the screws fixed in step above, and slide the panel so that the screws reach the key hole edge.
4. Retighten completely two temporarily fixed screws and other two screws. (Total 4 screws)
5. Connect the louver motor connector and display connector.
6. After tightening these screws, install the air inlet grille (including the air filter).

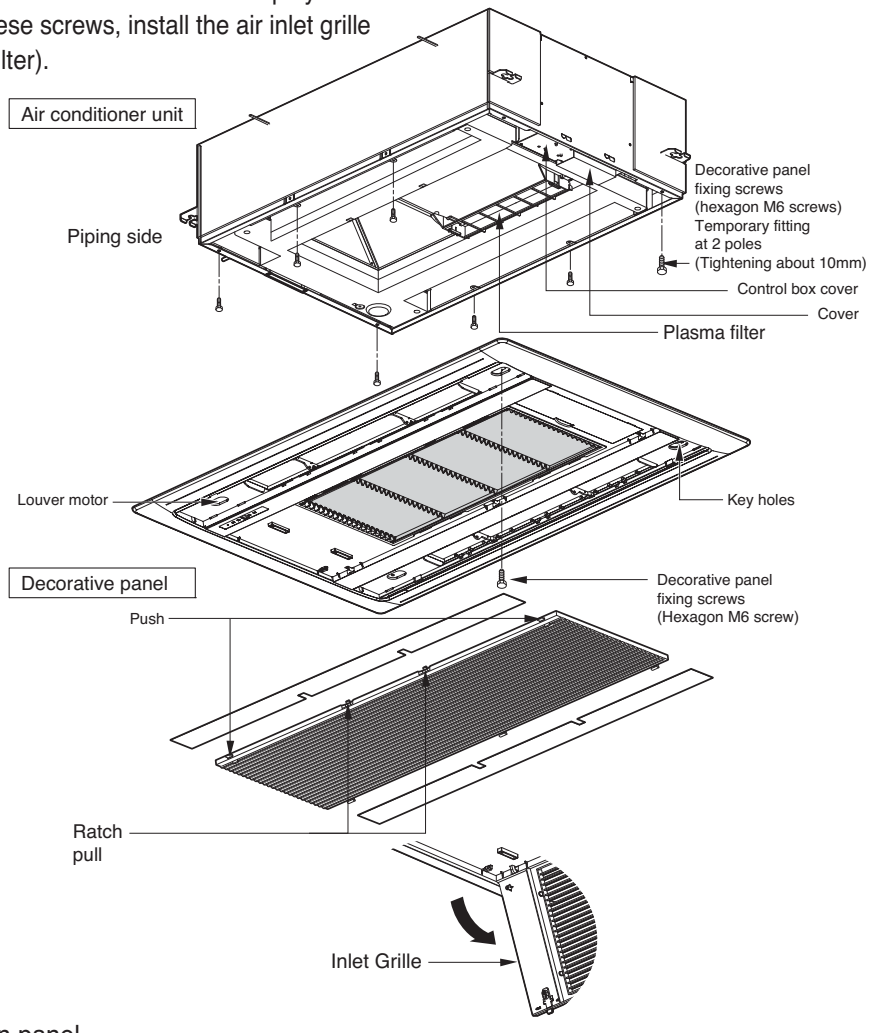

⚠ CAUTION

Install the decoration panel otherwise cool air leakage causes condensation.
⇨ Water drops fall.

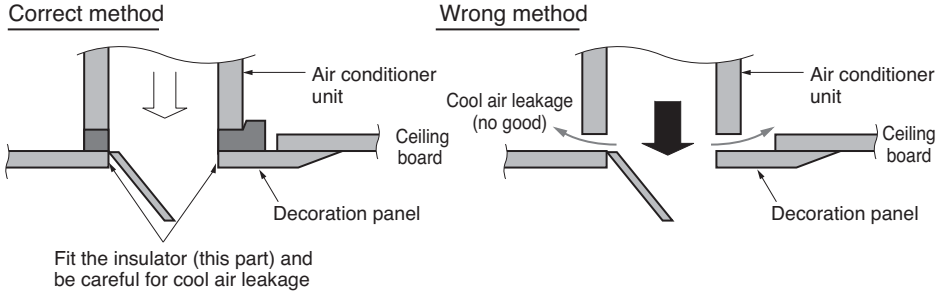

10.5 Indoor Unit Drain Piping

- Drain piping must have down-slope (1/50 to 1/100): Make sure not to provide up-and-down slope to prevent reversal flow.
- During drain piping connection, be careful not to exert extra force on the drain port on the indoor unit.
- The outside diameter of the drain connection on the indoor unit is 32mm.

Piping material: Polyvinyl chloride pipe inner diameter Ø 25mm and pipe fittings

- Make sure to install heat insulation on the drain piping.

Heat insulation material: Polyethylene foam with thickness more than 8 mm.

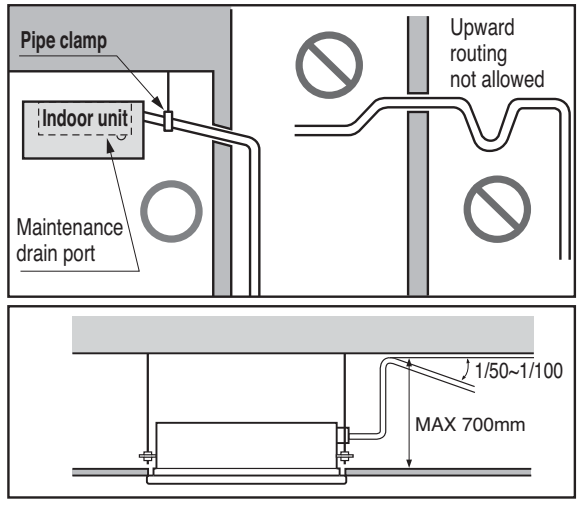

Drain test

The air conditioner uses a drain pump to drain water.
Use the following procedure to test the drain pump operation:

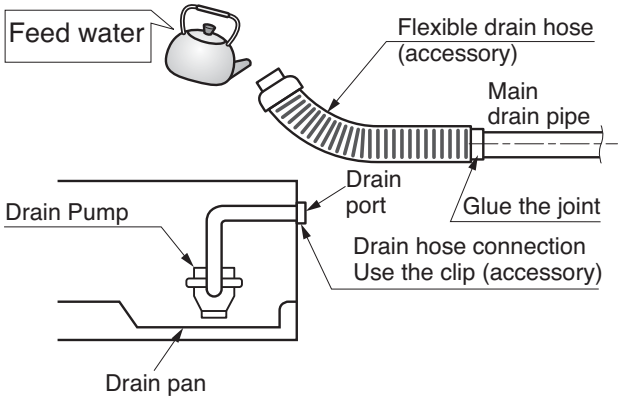

- Connect the main drain pipe to the exterior and leave it provisionally until the test comes to an end.
- Feed water to the flexible drain hose and check the piping for leakage.
- Make sure to check the drain pump for normal operating and noise when electrical wiring is complete.
- When the test is complete, connect the flexible drain hose to the drain port on the indoor unit.

⚠ CAUTION

The supplied flexible drain hose should not be strained.
A strained hose may cause leakage of water.

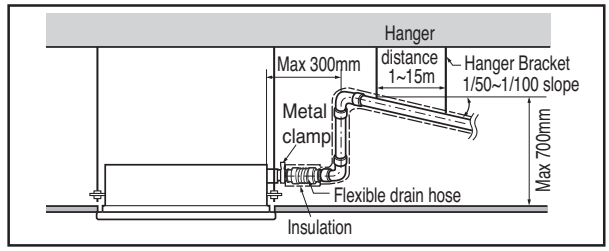

10. Installation

⚠ CAUTION

After the confirmation of the above conditions, prepare the wiring as follows:

1) Never fail to have separate power specially for the air conditioner. As for the method of wiring, follow the circuit diagram pasted on the inside of control box cover.
2) Provide a circuit breaker switch between power source and the unit.
3) The screw which fasten the wiring in the casing of electrical fittings are liable to come loose from vibrations to which the unit is subjected during the course of transportation. Check them and make sure that they are all tightly fastened. (If they are loose, it could give rise to burn-out of the wires.)
4) Confirm the specification of power source
5) Confirm that electrical capacity is sufficient.
6) Be sure that the starting voltage is maintained at more than 90 percent of the rated voltage marked on the name plate.
7) Confirm that the cable thickness is as specified in the power sources specification. (Particularly note the relation between cable length and thickness.)
8) Do not install the leakage breaker in a place which is wet or moist. Water or moist may cause short circuit.
9) The following troubles would be caused by voltage drop-down.
- Vibration of a magnetic switch, damage on the contact point there of, fuse breaking, disturbance to the normal function of a overload protection device.
- Proper starting power is not given to the compressor.

HAND OVER

Teach the customer the operation and maintenance procedures, using the operation manual.
(air filter cleaning, temperature control, etc.)

WIRED REMOTE CONTROLLER INSTALLATION

- Since the room temperature sensor is in the remote controller, the remote controller box should be installed in a place away from direct sunlight, high humidity and direct supply of cold air to maintain proper space temperature.
  Install the remote controller about 5ft(1.5m) above the floor in an area with good air circulation at an average temperature.

Do not install the remote controller where it can be affected by:

- Drafts, or dead spots behind doors and in corners.
- Hot or cold air from ducts.
- Radiant heat from sun or appliances.
- Concealed pipes and chimneys.
- Uncontrolled areas such as an outside wall behind the remote controller.
- This remote controller is equipped with a seven segment LED. display. For proper display of the remote controller LED's, the remote controller should be installed properly as shown in Fig.1.
  (The standard height is 1.2~1.5 m from floor level.)

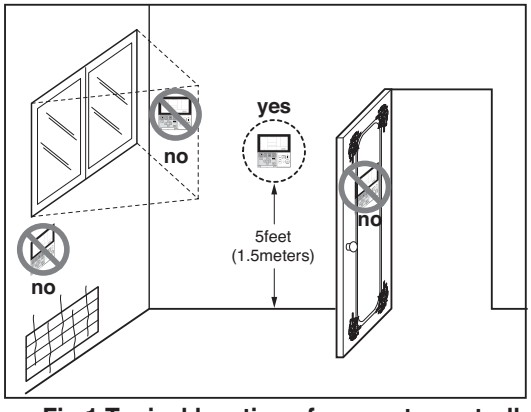

Fig.1 Typical locations for remote controller

11. Accessories

Standard Accessories

Name	Clamp metal	Drain hose	Insulation for fitting	Washer for hanging bracket	Clamp (Tie Wrap)	Bolt	(Other)
Quantity	2 EA	1 EA	1 set	8 EA	4 EA	4 EA	• Paper pattern for installation • Owner's manual • Installation manual
Shape			 for gas pipe for liquid pipe		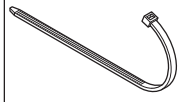	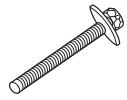	

• Screws for fixing panels are attached to decoration panel.

⚠ CAUTION

• Use only those accessories (Standard or optional) which have designated specifications.

MULTI V™ Indoor unit

Ceiling Cassette 4-way

1. List of functions

2. Specifications

3. Dimensions

4. Piping Diagrams

5. Wiring Diagrams

6. Capacity Tables

7. Air Velocity and Temperature Distribution

8. Electric Characteristics

9. Sound Levels

10. Installation

11. Accessories

1. List of functions

Category	Function	ARNU05GTR*4, ARNU07GTR*4, ARNU09GTR*4, ARNU12GTR*4 ARNU15GTQ*4, ARNU18GTQ*4, ARNU21GTQ*4, ARNU24GTP*4, ARNU28GTP*4, ARNU30GTP*4, ARNU36GTN*4, ARNU42GTM*4, ARNU48GTM*4, ARNU54GTM*4
Air flow	Air supply outlet	4
	Airflow direction control(left & right)	-
	Airflow direction control(up & down)	Auto
	Auto swing(left & right)	-
	Auto swing(up & down)	O
	Airflow steps(fan/cool/heat)	4 / 5 / 4
	Chaos swing	X
	Chaos wind(auto wind)	O
	Jet cool(Power wind)	O
	Swirl wind	O
Air purifying	Deodorizing filter	X
	Plasma air purifier	O(C4 Model only), Option(A4 Model - PTPKQ0(TQ/TR), PTPKM0(TP/TN/TM))
	Prefilter(washable / anti-fungus)	O
Installation	Drain pump	O
	E.S.P. control	X
	Electric heater(operation)	X
	High ceiling operation	O
Reliability	Hot start	O
	Self diagnosis	O
	Soft dry operation	O
Convenience	Auto changeover	O(Heat recovery)
	Auto cleaning	X
	Auto operation(artificial intelligence)	O(Heat pump or Cooling only)
	Auto restart operation	O
	Child lock	O
	Forced operation	O
	Group control	O
	Sleep mode	O
	Timer(on/off)	O
	Timer(weekly)	O
	Two thermistor control	O
	Elevation Grill	PTEGM0 (TM,TN,TP only)
	External On/Off	O
Individual control	Wide wired remote controller (RS2)	PQRCVSL0/PQRCVSL0QW
	Wide wired remote controller (RS2 Plus)	PREMTB001/PREMTBB01
	Premium wired remote controller	PREMTA000/PREMTA000A/PREMTA000B
	Simple wired remote controller	PQRCVCL0Q(W)
	Wired remote controller(for hotel use)	PQRCHCA0Q(W)
	Wireless LCD remote control	PQWRH(C)Q0FDB
Special function kit	Zone control	-
	CTIE	-
	Electro thermostat	-
	Remote temperature sensor	PQRSTA0
	Group control wire	PZCWRCG3
	Dry contact	PDRYCB000/PDRYCB100/PDRYCB300/PDRYCB400/PDRYCB500

O : Applied X : Not applied – : No relation

Option : Model name & price are different according to options, and assembled in factory with main unit.

Accessory : Installed at field, ordered and purchased separately by the corresponding model name, supplied with separate package.

* Plasma kit and Elevation Grille are not applicable at the same time

2. Specifications

* Model Name
A:Basic, C:Plasma

Type			4 Way Ceiling Cassette		
Model		Unit	ARNU05GTR*4	ARNU07GTR*4	ARNU09GTR*4
Cooling Capacity		kW	1.6	2.2	2.8
		kcal/h	1,400	1,900	2,400
		Btu/h	5,500	7,500	9,600
Heating Capacity		kW	1.8	2.5	3.2
		kcal/h	1,500	2,200	2,800
		Btu/h	6,100	8,500	10,900
Casing			Galvanized Steel Plate	Galvanized Steel Plate	Galvanized Steel Plate
Dimensions(WxHxD)	Body	mm	570 x 214 x 570	570 x 214 x 570	570 x 214 x 570
		inch	22-7/16 x 8-7/16 x 22-7/16	22-7/16 x 8-7/16 x 22-7/16	22-7/16 x 8-7/16 x 22-7/16
	Decoration Panel #1	mm	700 x 22 x 700	700 x 22 x 700	700 x 22 x 700
		inch	27-9/16 x 7/8 x 27-9/16	27-9/16 x 7/8 x 27-9/16	27-9/16 x 7/8 x 27-9/16
	Decoration Panel #2	mm	620 x 34 x 620	620 x 34 x 620	620 x 34 x 620
		inch	24-13/32 x 1-11/32 x 24-13/32	24-13/32 x 1-11/32 x 24-13/32	24-13/32 x 1-11/32 x 24-13/32
Coil	Rows x Columns x FPI		1 x 8 x 18	1 x 8 x 18	2 x 8 x 18
	Face Area	m^2	0.21	0.21	0.21
Fan	Type		Turbo Fan	Turbo Fan	Turbo Fan
	Motor Output x Number	W	43 x 1	43 x 1	43 x 1
	Running Current	A	0.2	0.2	0.2
	Air Flow Rate(H / M / L)	CMM	7.5 / 7.0 / 6.6	7.5 / 7.0 / 6.6	8.0 / 7.5 / 7.1
		cfm	265 / 247 / 212	265 / 247 / 212	283 / 265 / 251
	Drive		Direct	Direct	Direct
	Motor type		BLDC	BLDC	BLDC
Temperature Control			Microprocessor, Thermostat for cooling and heating	Microprocessor, Thermostat for cooling and heating	Microprocessor, Thermostat for cooling and heating
Sound Absorbing Thermal Insulation Material			Foamed polystrene	Foamed polystrene	Foamed polystrene
Safety Device			Fuse	Fuse	Fuse
Pipe Connections	Liquid Side	mm(inch)	Ø6.35(1/4)	Ø6.35(1/4)	Ø6.35(1/4)
	Gas Side	mm(inch)	Ø12.7(1/2)	Ø12.7(1/2)	Ø12.7(1/2)
	Drain Pipe(Internal Dia.)	mm(inch)	25(1)	25(1)	25(1)
Net Weight	Body	kg(lbs)	12.6(27.8)	12.6(27.8)	13.7(30.2)
	Packaged	kg(lbs)	15.3(33.7)	15.3(33.7)	16.4(36.2)
Noise Level(Sound Press, 1.5m, H / M / L)		dB(A)	29 / 27 / 26	29 / 27 / 26	30 / 29 / 27
Power Supply		Ø, V, Hz	1, 220-240, 50	1, 220-240, 50	1, 220-240, 50
			1, 220, 60	1, 220, 60	1, 220, 60
Refrigerant Control			EEV	EEV	EEV
Transmission cable		mm^2	CVV-SB 1.0~1.5 x 2C	CVV-SB 1.0~1.5 x 2C	CVV-SB 1.0~1.5 x 2C
Panel Color			Morning fog	Morning fog	Morning fog
Panel Name(Accessory)			PT-UQC / PT-QCHW0		

Notes:

1. Capacities are based on the following conditions:
   Cooling
   - Indoor temp. 27°C[80.6°F]DB/ 19°C[66.2°F]WB
   - Outdoor temp. 35°C[95°F]DB/ 24°C[75.2°F]WB
   - Interconnecting Piping Length 7.5m
   - Level Difference of Zero

   Heating
   - Indoor temp. 20°C[68°F]DB/ 15°C[59°F]WB
   - Outdoor temp. 7°C[44.6°F]DB/ 6°C[42.8°F]WB
   - Interconnecting Piping Length 7.5m
   - Level Difference of Zero
2. Capacities are Net Capacities
3. Due to our policy of innovation some specifications may be changed without prior notification
4. Wiring cable size must comply with the applicable local and national codes. And "Electric characteristics" chapter should be considered for electrical work and design. Especially the power cable and circuit breaker should be selected in accordance with that.
5. EEV: Electronic Expansion Valve
6. Anechoic chamber conversion value is measured at 1.5 m downward from unit centre.
   The values depends on the ambient conditions and values are normally higher in actual operation.

Conversion Formula
kcal/h= kW x 860
Btu/h = kW x 3412
cfm = m^3/min x 35.3
l/s = CMM x 1000/60

2. Specifications

* Model Name
A:Basic, C:Plasma

Type			4 Way Ceiling Cassette		
Model		Unit	ARNU12GTR*4	ARNU15GTQ*4	ARNU18GTQ*4
Cooling Capacity		kW	3.6	4.5	5.6
		kcal/h	3,100	3,900	4,800
		Btu/h	12,300	15,400	19,100
Heating Capacity		kW	4.0	5.0	6.3
		kcal/h	3,400	4,300	5,400
		Btu/h	13,600	17,100	21,500
Casing			Galvanized Steel Plate	Galvanized Steel Plate	Galvanized Steel Plate
Dimensions(WxHxD)	Body	mm	570 x 214 x 570	570 x 256 x 570	570 x 256 x 570
		inch	22-7/16 x 8-7/16 x 22-7/16	22-7/16 x 10-3/32 x 22-7/16	22-7/16 x 10-3/32 x 22-7/16
	Decoration Panel #1	mm	700 x 22 x 700	700 x 22 x 700	700 x 22 x 700
		inch	27-9/16 x 7/8 x 27-9/16	27-9/16 x 7/8 x 27-9/16	27-9/16 x 7/8 x 27-9/16
	Decoration Panel #2	mm	620 x 34 x 620	620 x 34 x 620	620 x 34 x 620
		inch	24-13/32 x 1-11/32 x 24-13/32	24-13/32 x 1-11/32 x 24-13/32	24-13/32 x 1-11/32 x 24-13/32
Coil	Rows x Columns x FPI		2 x 8 x 18	2 x 10 x 18	2 x 10 x 18
	Face Area	m^2	0.21	0.27	0.27
Fan	Type		Turbo Fan	Turbo Fan	Turbo Fan
	Motor Output x Number	W	43 x 1	43 x 1	43 x 1
	Running Current	A	0.2	0.2	0.2
	Air Flow Rate(H / M / L)	CMM	8.7 / 8.0 / 7.0	11.0 / 10.0 / 9.3	11.2 / 11.0 / 10.0
		cfm	307 / 283 / 247	388 / 353 / 328	396 / 388 / 353
	Drive		Direct	Direct	Direct
	Motor type		BLDC	BLDC	BLDC
Temperature Control			Microprocessor, Thermostat for cooling and heating	Microprocessor, Thermostat for cooling and heating	Microprocessor, Thermostat for cooling and heating
Sound Absorbing Thermal Insulation Material			Foamed polystrene	Foamed polystrene	Foamed polystrene
Safety Device			Fuse	Fuse	Fuse
Pipe Connections	Liquid Side	mm(inch)	Ø6.35(1/4)	Ø6.35(1/4)	Ø6.35(1/4)
	Gas Side	mm(inch)	Ø12.7(1/2)	Ø12.7(1/2)	Ø12.7(1/2)
	Drain Pipe(Internal Dia.)	mm(inch)	25(1)	25(1)	25(1)
Net Weight	Body	kg(lbs)	13.7(30.2)	15.0(33.1)	15.0(33.1)
	Packaged	kg(lbs)	16.4(36.2)	17.9(39.5)	17.9(39.5)
Noise Level(Sound Press, 1.5m, H / M / L)		dB(A)	32 / 30 / 27	36 / 34 / 32	37 / 35 / 34
Power Supply		Ø, V, Hz	1, 220-240, 50	1, 220-240, 50	1, 220-240, 50
			1, 220, 60	1, 220, 60	1, 220, 60
Refrigerant Control			EEV	EEV	EEV
Transmission cable		mm^2	CVV-SB 1.0~1.5 x 2C	CVV-SB 1.0~1.5 x 2C	CVV-SB 1.0~1.5 x 2C
Panel Color			Morning fog	Morning fog	Morning fog
Panel Name(Accessory)			PT-UQC / PT-QCHW0		

Notes:

1. Capacities are based on the following conditions:
   Cooling
   - Indoor temp. 27°C[80.6°F]DB/ 19°C[66.2°F]WB
   - Outdoor temp. 35°C[95°F]DB/ 24°C[75.2°F]WB
   - Interconnecting Piping Length 7.5m
   - Level Difference of Zero

   Heating
   - Indoor temp. 20°C[68°F]DB/ 15°C[59°F]WB
   - Outdoor temp. 7°C[44.6°F]DB/ 6°C[42.8°F]WB
   - Interconnecting Piping Length 7.5m
   - Level Difference of Zero
2. Capacities are Net Capacities
3. Due to our policy of innovation some specifications may be changed without prior notification
4. Wiring cable size must comply with the applicable local and national codes. And "Electric characteristics" chapter should be considered for electrical work and design. Especially the power cable and circuit breaker should be selected in accordance with that.
5. EEV: Electronic Expansion Valve
6. Anechoic chamber conversion value is measured at 1.5 m downward from unit centre.
   The values depends on the ambient conditions and values are normally higher in actual operation.

Conversion Formula
kcal/h= kW x 860
Btu/h = kW x 3412
cfm = m^3/min x 35.3
l/s = CMM x 1000/60

2. Specifications

* Model Name
A:Basic, C:Plasma

Type			4 Way Ceiling Cassette		
Model		Unit	ARNU21GTQ*4	ARNU24GTP*4	ARNU28GTP*4
Cooling Capacity		kW	6.0	7.1	8.2
		kcal/h	5,100	6,100	7,100
		Btu/h	20,500	24,200	28,000
Heating Capacity		kW	6.8	8.0	9.2
		kcal/h	5,800	6,900	8,000
		Btu/h	23,200	27,300	31,500
Casing			Galvanized Steel Plate	Galvanized Steel Plate	Galvanized Steel Plate
Dimensions(WxHxD)	Body	mm	570 x 256 x 570	840 x 204 x 840	840 x 204 x 840
		inch	22-7/16 x 10-3/32 x 22-7/16	33-1/16 x 8-1/32 x 33-1/16	33-1/16 x 8-1/32 x 33-1/16
	Decoration Panel #1	mm	700 x 22 x 700	950 x 25 x 950	950 x 25 x 950
		inch	27-9/16 x 7/8 x 27-9/16	37-13/32 x 31/32 x 37-13/32	37-13/32 x 31/32 x 37-13/32
	Decoration Panel #2	mm	620 x 34 x 620	-	-
		inch	24-13/32 x 1-11/32 x 24-13/32	-	-
Coil	Rows x Columns x FPI		2 x 10 x 18	2 x 8 x 19	2 x 8 x 19
	Face Area	m^2	0.27	0.4	0.4
Fan	Type		Turbo Fan	Turbo Fan	Turbo Fan
	Motor Outputx Number	W	43 x 1	30	30
	Running Current	A	0.2	0.15	0.15
	Air Flow Rate(H / M / L)	CMM	12.0 / 11.1 / 9.4	17 / 15 / 13	19 / 16 / 14
		cfm	424 / 392 / 332	600 / 529 / 459	671 / 565 / 494
	Drive		Direct	Direct	Direct
	Motor type		BLDC	BLDC	BLDC
Temperature Control			Microprocessor, Thermostat for cooling and heating		
Sound Absorbing Thermal Insulation Material			Foamed polystrene	Foamed polystrene	Foamed polystrene
Safety Device			Fuse	Fuse	Fuse
Pipe Connections	Liquid Side	mm(inch)	Ø9.52(3/8)	Ø9.52(3/8)	Ø9.52(3/8)
	Gas Side	mm(inch)	Ø15.88(5/8)	Ø15.88(5/8)	Ø15.88(5/8)
	Drain Pipe(Internal Dia.)	mm(inch)	25(1)	25(1)	25(1)
Net Weight	Body	kg(lbs)	15.0(33.0)	20.8(45.8)	20.8(45.8)
Noise Level (Sound Press, 1.5m, H / M / L)		dB(A)	40 / 38 / 34	36 / 34 / 31	39 / 35 / 33
Power Supply		Ø, V, Hz	1, 220-240, 50	1, 220-240, 50	1, 220-240, 50
			1, 220, 60	1, 220, 60	1, 220, 60
Refrigerant Control			EEV	EEV	EEV
Transmission cable		mm^2	CVV-SB 1.0~1.5 x 2C	CVV-SB 1.0~1.5 X 2C	CVV-SB 1.0~1.5 X 2C
Panel Color			Morning fog	Morning fog	Morning fog
Panel Name(Accessory)			PT-UQC / PT-QCHW0	PT-UMC(1)	PT-UMC(1)
Elevation Grill(Accessory)			-	PTEGM0	PTEGM0

Notes:

1. Capacities are based on the following conditions:
   Cooling
   - Indoor temp. 27°C[80.6°F]DB/ 19°C[66.2°F]WB
   - Outdoor temp. 35°C[95°F]DB/ 24°C[75.2°F]WB
   - Interconnecting Piping Length 7.5m
   - Level Difference of Zero

   Heating
   - Indoor temp. 20°C[68°F]DB/ 15°C[59°F]WB
   - Outdoor temp. 7°C[44.6°F]DB/ 6°C[42.8°F]WB
   - Interconnecting Piping Length 7.5m
   - Level Difference of Zero
2. Capacities are Net Capacities
3. Due to our policy of innovation some specifications may be changed without prior notification
4. Wiring cable size must comply with the applicable local and national codes. And "Electric characteristics" chapter should be considered for electrical work and design. Especially the power cable and circuit breaker should be selected in accordance with that.
5. EEV: Electronic Expansion Valve
6. Anechoic chamber conversion value is measured at 1.5 m downward from unit centre.
   The values depends on the ambient conditions and values are normally higher in actual operation.

Conversion Formula
kcal/h= kW x 860
Btu/h = kW x 3412
cfm = m^3/min x 35.3
l/s = CMM x 1000/60

2. Specifications

* Model Name
A:Basic, C:Plasma

Type			4 Way Ceiling Cassette		
Model		Unit	ARNU30GTP*4	ARNU36GTN*4	ARNU42GTM*4
Cooling Capacity		kW	9.0	10.6	12.3
		kcal/h	7,700	9,100	10,600
		Btu/h	30,700	36,200	42,000
Heating Capacity		kW	10.0	11.9	13.8
		kcal/h	8,600	10,200	11,000
		Btu/h	34,100	40,600	43,800
Casing			Galvanized Steel Plate	Galvanized Steel Plate	Galvanized Steel Plate
Dimensions(WxHxD)	Body	mm	840 x 204 x 840	840 x 246 x 840	840 x 288 x 840
		inch	33-1/16 x 8-1/32 x 33-1/16	33-1/16 x 9-11/16 x 33-1/16	33-1/16 x 11-11/32 x 33-1/16
	Decoration Panel	mm	950 x 25 x 950	950 x 25 x 950	950 x 25 x 950
		inch	37-13/32 x 31/32 x 37-13/32	37-13/32 x 31/32 x 37-13/32	37-13/32 x 31/32 x 37-13/32
Coil	Rows x Columns x FPI		2 x 8 x 19	2 x 10 x 19	2 x 12 x 19
	Face Area	m^2	0.4	0.57	0.57
Fan	Type		Turbo Fan	Turbo Fan	Turbo Fan
	Motor Outputx Number	W	30	135	135
	Running Current	A	0.15	0.56	0.56
	Air Flow Rate(H / M / L)	CMM	24.3 / 22.8 / 19.5	25 / 21 / 19	30 / 27 / 24
		cfm	858 / 805 / 688	883 / 742 / 671	1,059 / 954 / 848
	Drive		Direct	Direct	Direct
	Motor type		BLDC	BLDC	BLDC
Temperature Control			Microprocessor, Thermostat for cooling and heating		
Sound Absorbing Thermal Insulation Material			Foamed polystrene	Foamed polystrene	Foamed polystrene
Safety Device			Fuse	Fuse	Fuse
Pipe Connections	Liquid Side	mm(inch)	Ø9.52(3/8)	Ø9.52(3/8)	Ø9.52(3/8)
	Gas Side	mm(inch)	Ø15.88(5/8)	Ø15.88(5/8)	Ø15.88(5/8)
	Drain Pipe(Internal Dia.)	mm(inch)	25(1)	25(1)	25(1)
Net Weight	Body	kg(lbs)	20.8(45.8)	23.5(51.8)	25.6(56.4)
Noise Level (Sound Press, 1.5m, H / M / L)		dB(A)	40 / 36 / 33	43 / 40 / 37	44 / 41 / 38
Power Supply		Ø, V, Hz	1, 220-240, 50	1, 220-240, 50	1, 220-240, 50
			1, 220, 60	1, 220, 60	1, 220, 60
Refrigerant Control			EEV	EEV	EEV
Transmission cable		mm^2	CVV-SB 1.0~1.5 X 2C	CVV-SB 1.0~1.5 X 2C	CVV-SB 1.0~1.5 X 2C
Panel Color			Morning fog	Morning fog	Morning fog
Panel Name(Accessory)			PT-UMC(1)	PT-UMC(1)	PT-UMC(1)
Elevation Grill(Accessory)			PTEGM0	PTEGM0	PTEGM0

Notes:

1. Capacities are based on the following conditions:
   - Cooling
     - Indoor temp. 27°C[80.6°F]DB/ 19°C[66.2°F]WB
     - Outdoor temp. 35°C[95°F]DB/ 24°C[75.2°F]WB
     - Interconnecting Piping Length 7.5m
     - Level Difference of Zero
   - Heating
     - Indoor temp. 20°C[68°F]DB/ 15°C[59°F]WB
     - Outdoor temp. 7°C[44.6°F]DB/ 6°C[42.8°F]WB
     - Interconnecting Piping Length 7.5m
     - Level Difference of Zero
2. Capacities are Net Capacities
3. Due to our policy of innovation some specifications may be changed without prior notification
4. Wiring cable size must comply with the applicable local and national codes. And “Electric characteristics” chapter should be considered for electrical work and design. Especially the power cable and circuit breaker should be selected in accordance with that.
5. EEV: Electronic Expansion Valve
6. Anechoic chamber conversion value is measured at 1.5 m downward from unit centre.
   The values depends on the ambient conditions and values are normally higher in actual operation.

Conversion Formula
kcal/h= kW x 860
Btu/h = kW x 3412
cfm = m^3/min x 35.3
l/s = CMM x 1000/60

2. Specifications

* Model Name
A:Basic, C:Plasma

Type			4 Way Ceiling Cassette	
Model		Unit	ARNU48GTM*4	ARNU54GTM*4
Cooling Capacity		kW	14.1	15.8
		kcal/h	12,100	13,600
		Btu/h	48,100	54,000
Heating Capacity		kW	15.9	18.0
		kcal/h	13,200	15,500
		Btu/h	51,200	61,400
Casing			Galvanized Steel Plate	Galvanized Steel Plate
Dimensions (WxHxD)	Body	mm	840 x 288 x 840	840 x 288 x 840
		inch	33-1/16 x 11-11/32 x 33-1/16	33-1/16 x 11-11/32 x 33-1/16
	Decoration Panel	mm	950 x 25 x 950	950 x 25 x 950
		inch	37-13/32 x 31/32 x 37-13/32	37-13/32 x 31/32 x 37-13/32
Coil	Rows x Columns x FPI		2 x 12 x 19	3 x 12 x 21
	Face Area	m^2	0.57	0.57
Fan	Type		Turbo Fan	Turbo Fan
	Motor Outputx Number	W	135	135
	Running Current	A	0.56	0.56
	Air Flow Rate(H / M / L)	CMM	31 / 29 / 27	34 / 32 / 27
		cfm	1,095 / 1,024 / 954	1,201 / 1,130 / 953
	Drive		Direct	Direct
	Motor type		BLDC	BLDC
Temperature Control			Microprocessor, Thermostat for cooling and heating	Microprocessor, Thermostat for cooling and heating
Sound Absorbing Thermal Insulation Material			Foamed polystrene	Foamed polystrene
Safety Device			Fuse	Fuse
Pipe Connections	Liquid Side	mm(inch)	Ø9.52(3/8)	Ø9.52(3/8)
	Gas Side	mm(inch)	Ø15.88(5/8)	Ø15.88(5/8)
	Drain Pipe(Internal Dia.)	mm(inch)	25(1)	25(1)
Net Weight	Body	kg(lbs)	25.6(56.4)	26.5(58.4)
Noise Level (Sound Press, 1.5m, H / M / L)		dB(A)	46 / 43 / 41	50 / 48 / 44
Power Supply		Ø, V, Hz	1, 220-240, 50	1, 220-240, 50
			1, 220, 60	1, 220, 60
Refrigerant Control			EEV	EEV
Transmission cable		mm^2	CVV-SB 1.0~1.5 X 2C	CVV-SB 1.0~1.5 X 2C
Panel Color			Morning fog	Morning fog
Panel Name(Accessory)			PT-UMC(1)	PT-UMC(1)
Elevation Grill(Accessory)			PTEGM0	PTEGM0

Notes:

1. Capacities are based on the following conditions:
   - Cooling
     - Indoor temp. 27°C[80.6°F]DB/ 19°C[66.2°F]WB
     - Outdoor temp. 35°C[95°F]DB/ 24°C[75.2°F]WB
     - Interconnecting Piping Length 7.5m
     - Level Difference of Zero
   - Heating
     - Indoor temp. 20°C[68°F]DB/ 15°C[59°F]WB
     - Outdoor temp. 7°C[44.6°F]DB/ 6°C[42.8°F]WB
     - Interconnecting Piping Length 7.5m
     - Level Difference of Zero
2. Capacities are Net Capacities
3. Due to our policy of innovation some specifications may be changed without prior notification
4. Wiring cable size must comply with the applicable local and national codes. And “Electric characteristics” chapter should be considered for electrical work and design. Especially the power cable and circuit breaker should be selected in accordance with that.
5. EEV: Electronic Expansion Valve
6. Anechoic chamber conversion value is measured at 1.5 m downward from unit centre.
   The values depends on the ambient conditions and values are normally higher in actual operation.

Conversion Formula
kcal/h= kW x 860
Btu/h = kW x 3412
cfm = m^3/min x 35.3
l/s = CMM x 1000/60

3. Dimensions

Ceiling Cassette 4-way
ARNU05GTR*4 ARNU07GTR*4 ARNU09GTR*4 ARNU12GTR*4

(unit : mm)

Number	Name	Description
1	Liquid pipe connection	Unit size(5k, 7k, 9k, 12k):ø6.35
2	Gas pipe connection	Unit size(5k, 7k, 9k, 12k):ø12.7
3	Drain pipe connection	VP25(Φ32)
4	Power supply connection	
5	Air discharge grill	
6	Air suction grill	

▣ Note

1. Unit should be installed in compliance with the installation manual in the product box.
2. Unit shall be grounded in accordance with the local regulations or applicable national codes.

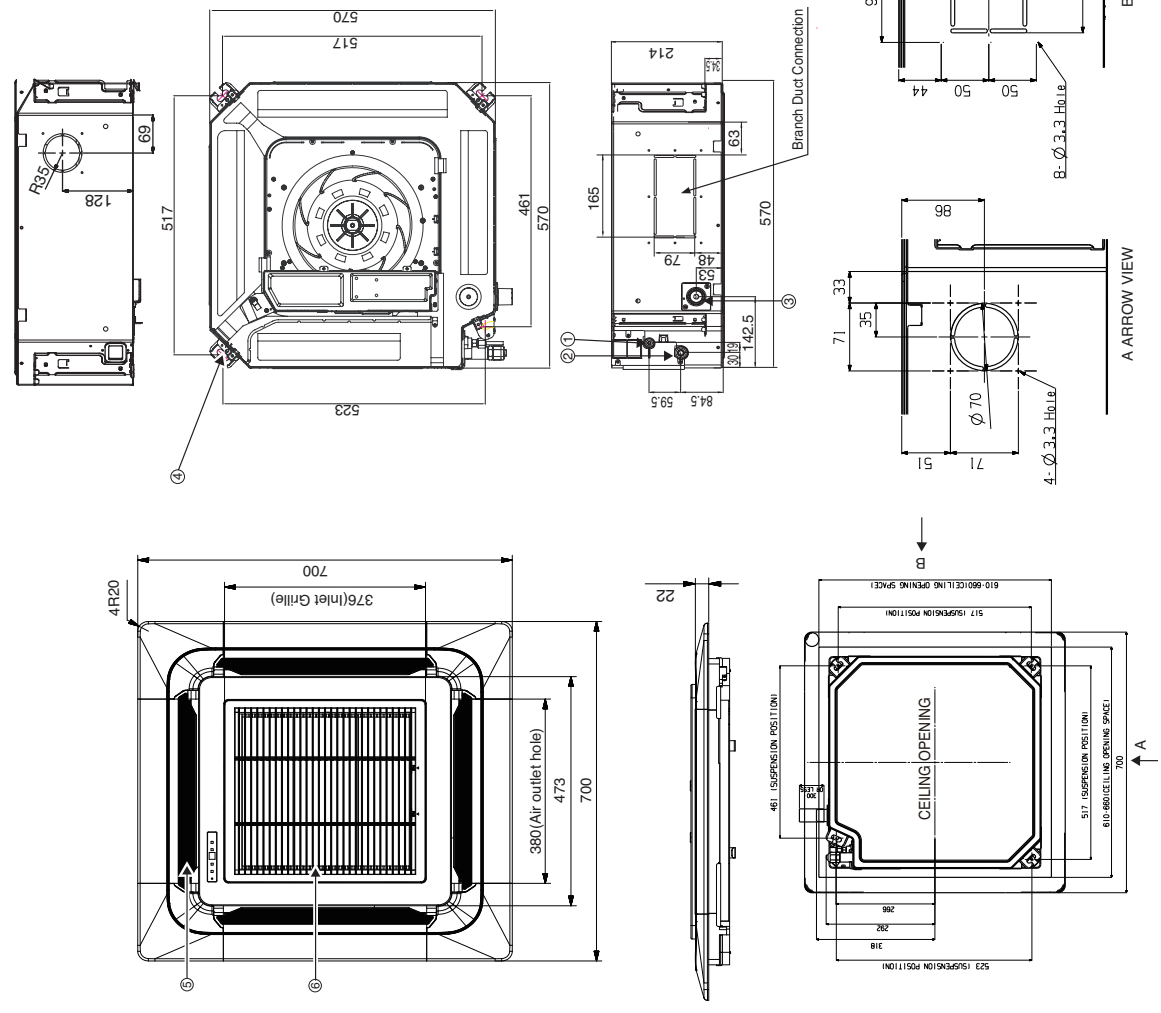

CHASSIS CODE: TR
Decoration Panel : PT-UQC

LG Electronics

[Unit: mm]

Ceiling Cassette 4-way

ARNU05GTR*4
ARNU07GTR*4
ARNU09GTR*4
ARNU12GTR*4

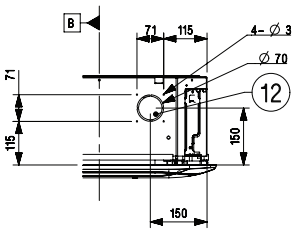

View A
Fresh Air Intake hole

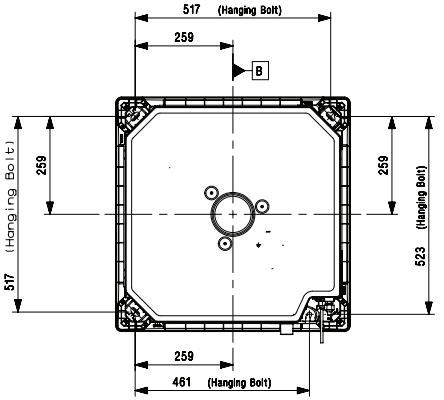

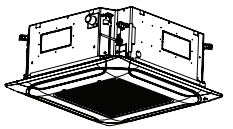

3D View

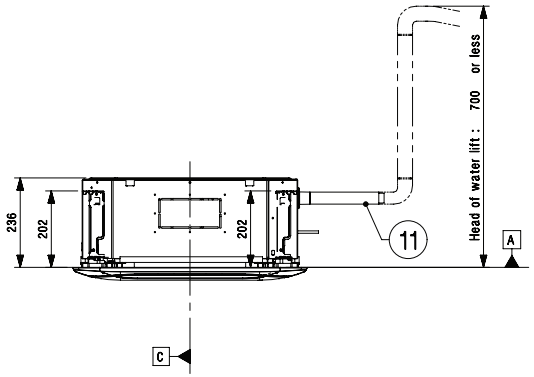

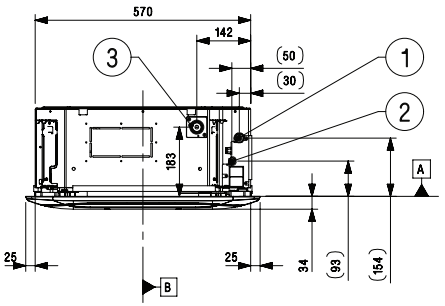

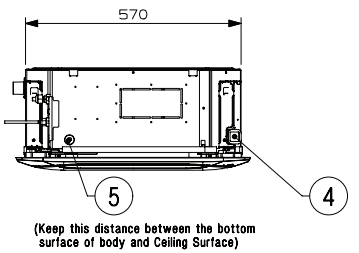

(Keep this distance between the bottom surface of body and Ceiling Surface)

Installation position of body

Symbols

View Direction
Datum line
Refrigerant/Drain Piping Direction

Note

1. Unit should be installed in compliance with the installation manual in the product box.
2. Unit should be grounded in accordance with the local regulations or applicable national codes.
3. All electrical components and materials to be supplied from the site must comply with the local regulations or international codes.
4. Electric characteristics chapter should be consid-ered for electrical work and design. Especially, the power cable and circuit breaker should be selected in accordance with that.

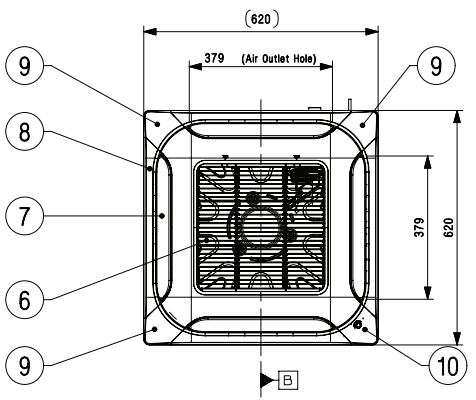

No.	Part Name	Description
12	Fresh Air Intake Hole	Knock-out type
11	Flexible Drain Hose	Supplied with product
10	Decoration Corner Display Cover	Supplied with panel
9	Decoration Corner Cover	Supplied with panel
8	Decoration Panel(Accessory)	PT-QCHW0
7	Air Outlet	-
6	Air Intake	-
5	Wired remote controller wire routing hole	-
4	Power and Communication cable routing hole	-
3	Drain Pipe Connection	-
2	Liquid Pipe Connection	-
1	Gas Pipe Connection	-

LG Electronics

CHASSIS CODE: TR

Ceiling Cassette 4-way

ARNU15GTQ*4
ARNU18GTQ*4
ARNU21GTQ*4

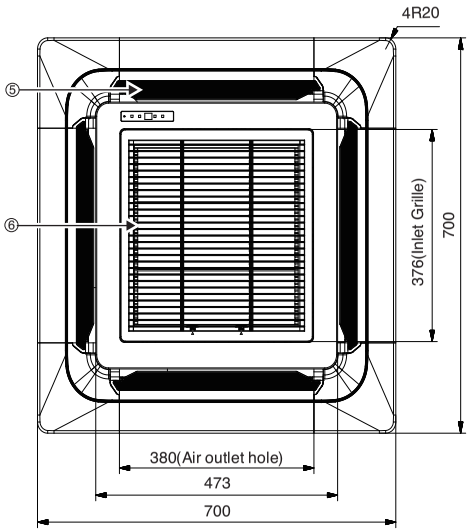



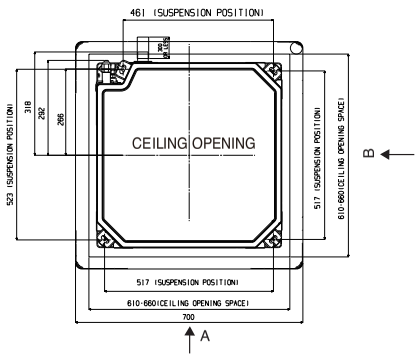

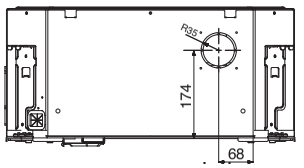

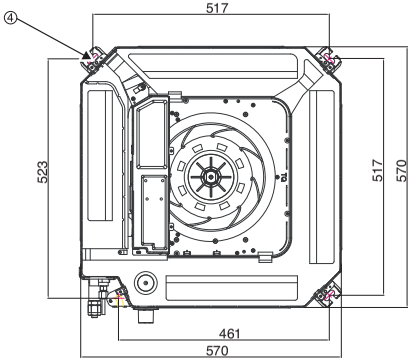

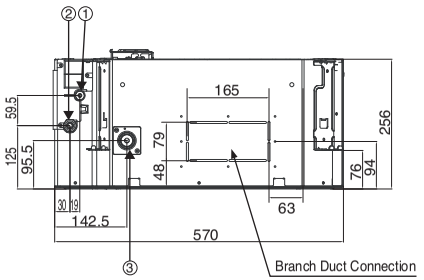

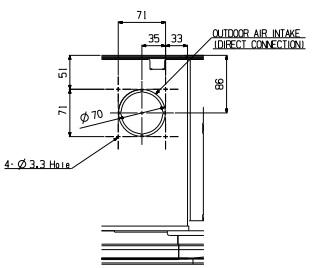

A ARROW VIEW

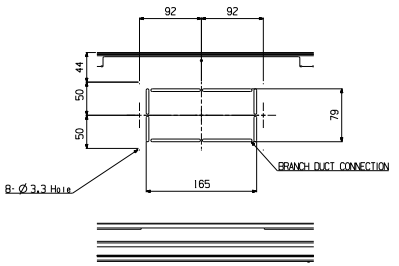

B ARROW VIEW

(unit : mm)

Number	Name	Descripition
1	Liquid pipe connection	Unit size(15k, 18k) : Ø6.35 Unit size(21k) : Ø9.52
2	Gas pipe connection	Unit size(15k, 18k) : Ø12.7 Unit size(21k) : Ø15.88
3	Drain pipe connection	VP25(Φ32)
4	Power supply connection	
5	Air discharge grill	
6	Air suction grill	

▣ Note

1. Unit should be installed in compliance with the installation manual in the product box.
2. Unit shall be grounded in accordance with the local regulations or applicable national codes.

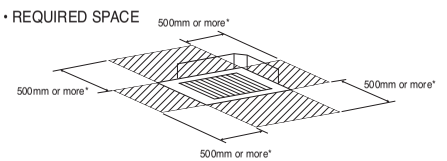

LG Electronics

CHASSIS CODE: TQ
Decoration Panel : PT-UQC

[Unit: mm]

Ceiling Cassette 4-way

ARNU15GTQ*4
ARNU18GTQ*4
ARNU21GTQ*4

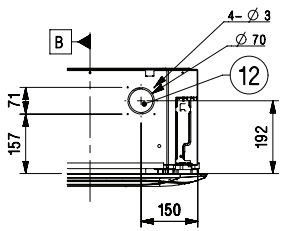

View A
Fresh Air Intake hole

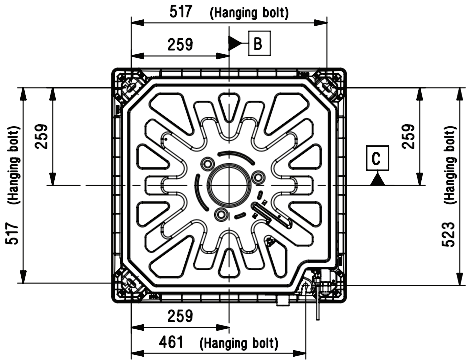

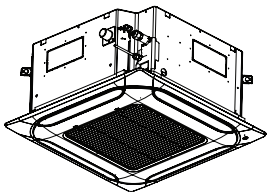

3D View

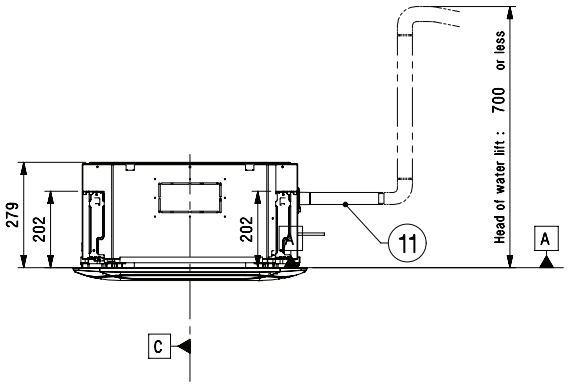

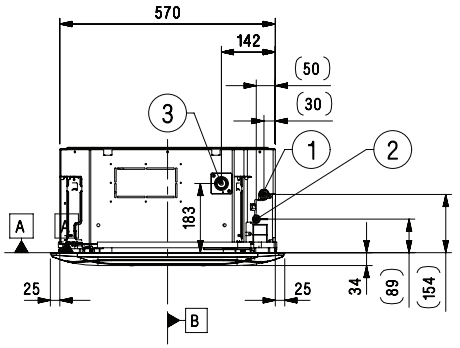

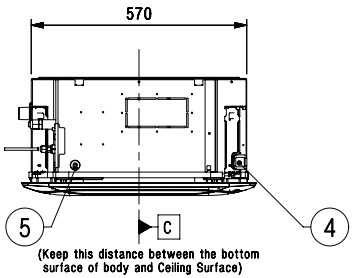

Installation position of body

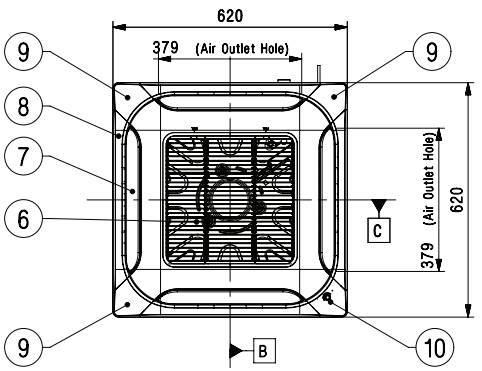

No.	Part Name	Description
12	Fresh Air Intake Hole	Knock-out type
11	Flexible Drain Hose	Supplied with product
10	Decoration Corner Display Cover	Supplied with panel
9	Decoration Corner Cover	Supplied with panel
8	Decoration Panel(Accessory)	PT-QCHW0
7	Air Outlet	-
6	Air Intake	-
5	Wired remote controller wire routing hole	-
4	Power and Communication cable routing hole	-
3	Drain Pipe Connection	-
2	Liquid Pipe Connection	-
1	Gas Pipe Connection	-

Symbols

View Direction
Datum line
Refrigerant/Drain Piping Direction

Note

1. Unit should be installed in compliance with the installation manual in the product box.
2. Unit should be grounded in accordance with the local regulations or applicable national codes.
3. All electrical components and materials to be supplied from the site must comply with the local regulations or international codes.
4. Electric characteristics chapter should be consid-ered for electrical work and design. Especially, the power cable and circuit breaker should be selected in accordance with that.

LG Electronics

CHASSIS CODE: TQ

Ceiling Cassette 4-way

ARNU24GTP*4
ARNU28GTP*4
ARNU30GTP*4

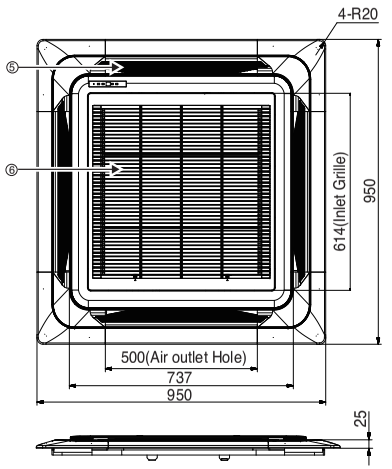

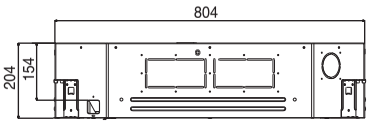

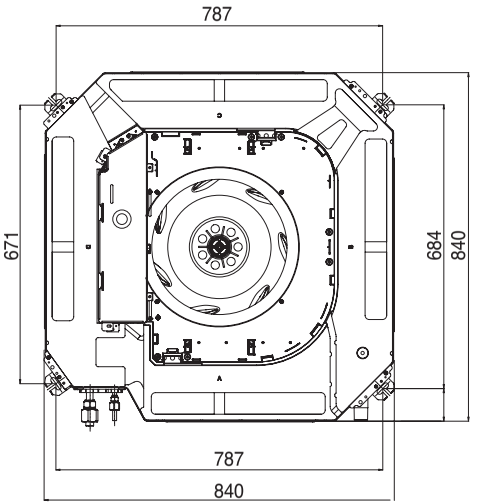

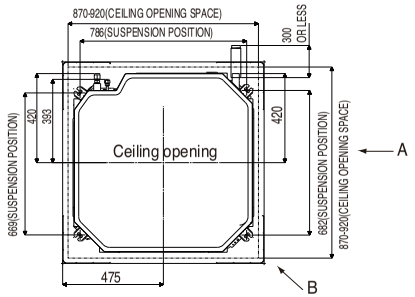

(unit : mm)

Number	Name	Description
1	Liquid pipe connection	Unit size(24k, 28k, 30k):ø9.52
2	Gas pipe connection	Unit size(24k, 28k, 30k):ø15.88
3	Drain pipe connection	VP25(Φ32)
4	Power supply connection	
5	Air discharge grill	
6	Air suction grill	

▣ Note

1. Unit should be installed in compliance with the installation manual in the product box.
2. Unit shall be grounded in accordance with the local regulations or applicable national codes.

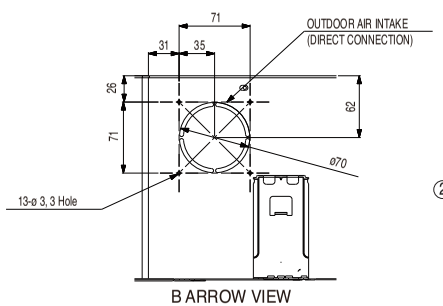

B ARROW VIEW

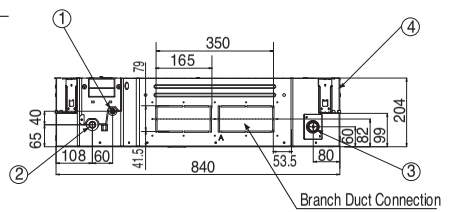

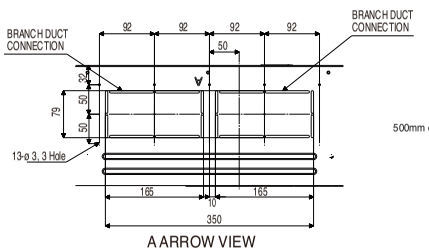

A ARROW VIEW

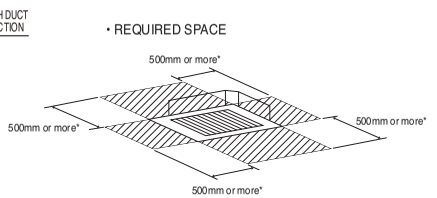

LG Electronics

CHASSIS CODE: TP

Ceiling Cassette 4-way

ARNU36GTN*4

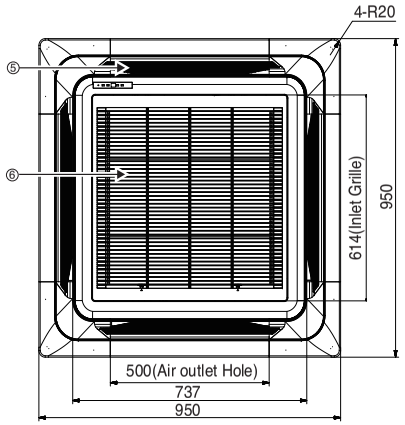

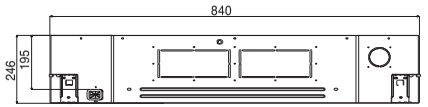

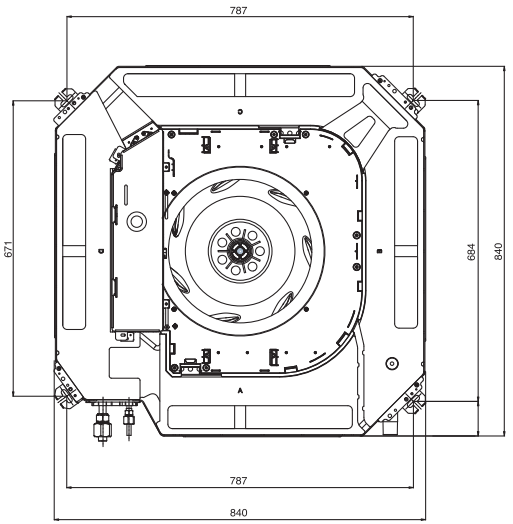

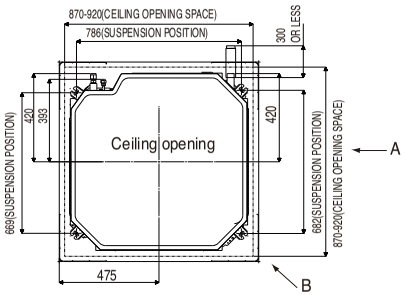

(unit : mm)

Number	Name	Descripition
1	Liquid pipe connection	Unit size(36k):ø9.52
2	Gas pipe connection	Unit size(36k):ø15.88
3	Drain pipe connection	VP25(Φ32)
4	Power supply connection	
5	Air discharge grill	
6	Air suction grill	

▣ Note

1. Unit should be installed in compliance with the installation manual in the product box.
2. Unit shall be grounded in accordance with the local regulations or applicable national codes.

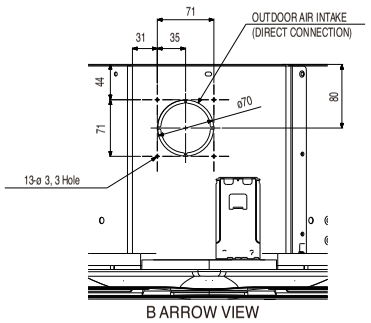

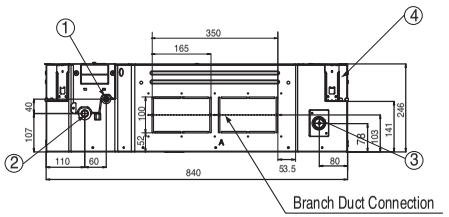

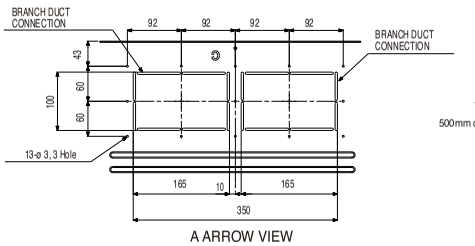

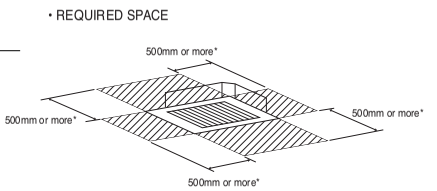

LG Electronics

CHASSIS CODE: TN

Ceiling Cassette 4-way

ARNU42GTM*4
ARNU48GTM*4
ARNU54GTM*4

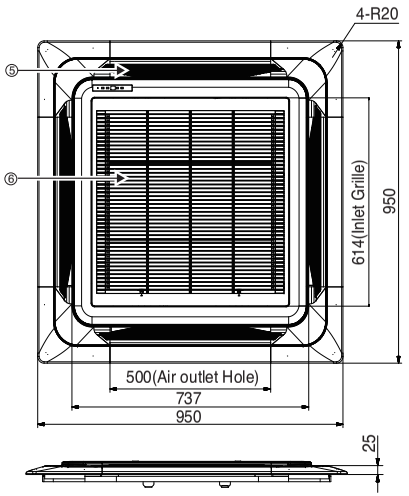

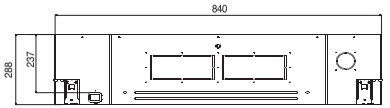

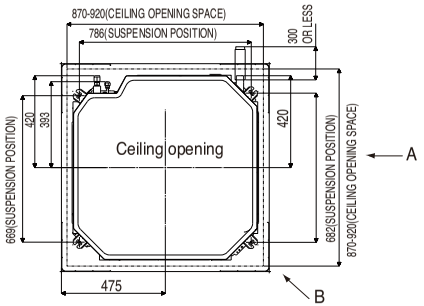

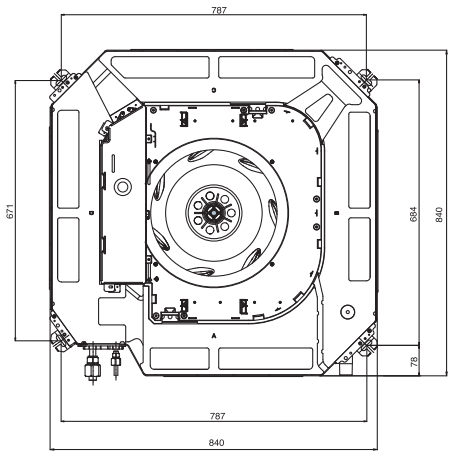

(unit : mm)

Number	Name	Descripition
1	Liquid pipe connection	Unit size(42k, 48k):ø9.52
2	Gas pipe connection	Unit size(42k, 48k):ø15.88
3	Drain pipe connection	VP25(Φ32)
4	Power supply connection	
5	Air discharge grill	
6	Air suction grill	

▣ Note

1. Unit should be installed in compliance with the installation manual in the product box.
2. Unit shall be grounded in accordance with the local regulations or applicable national codes.

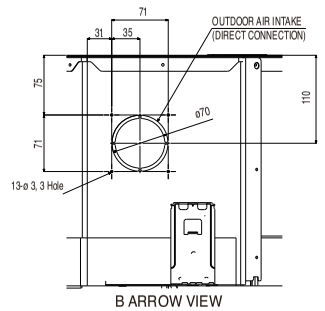

B ARROW VIEW

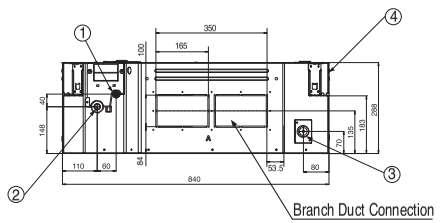

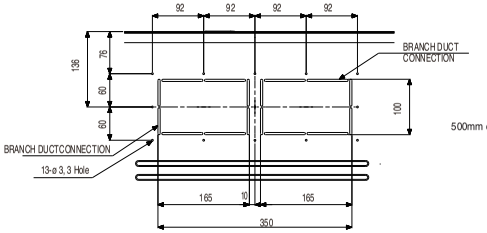

A ARROW VIEW

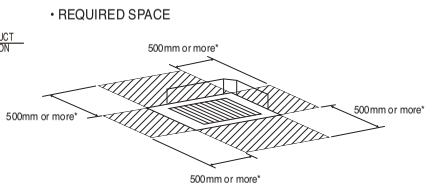

LG Electronics

CHASSIS CODE: TM

4. Piping Diagrams

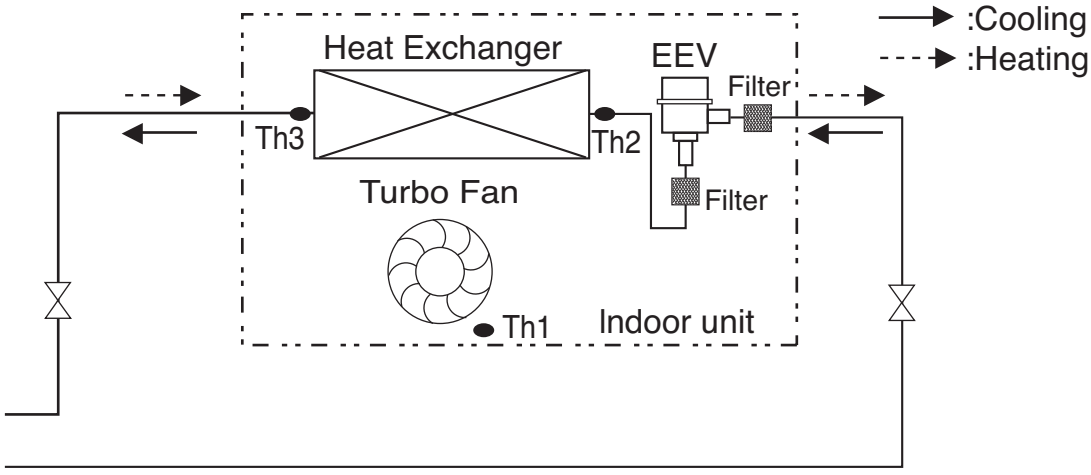

Refrigerant pipe connection port diameter

[Unit: mm(inch)]

Model	Gas	Liquid
ARNU05GTR*4	Ø12.7(1/2)	Ø6.35(1/4)
ARNU07GTR*4	Ø12.7(1/2)	Ø6.35(1/4)
ARNU09GTR*4	Ø12.7(1/2)	Ø6.35(1/4)
ARNU12GTR*4	Ø12.7(1/2)	Ø6.35(1/4)
ARNU15GTQ*4	Ø12.7(1/2)	Ø6.35(1/4)
ARNU18GTQ*4	Ø12.7(1/2)	Ø6.35(1/4)
ARNU21GTQ*4	Ø15.88(5/8)	Ø9.52(3/8)
ARNU24GTP*4	Ø15.88(5/8)	Ø9.52(3/8)
ARNU28GTP*4	Ø15.88(5/8)	Ø9.52(3/8)
ARNU30GTP*4	Ø15.88(5/8)	Ø9.52(3/8)
ARNU36GTN*4	Ø15.88(5/8)	Ø9.52(3/8)
ARNU42GTM*4	Ø15.88(5/8)	Ø9.52(3/8)
ARNU48GTM*4	Ø15.88(5/8)	Ø9.52(3/8)
ARNU54GTM*4	Ø15.88(5/8)	Ø9.52(3/8)

LOC.	Description
Th1	Room thermistor
Th2	Pipe in thermistor
Th3	Pipe out thermistor

5. Wiring Diagrams

TR/TQ Chassis

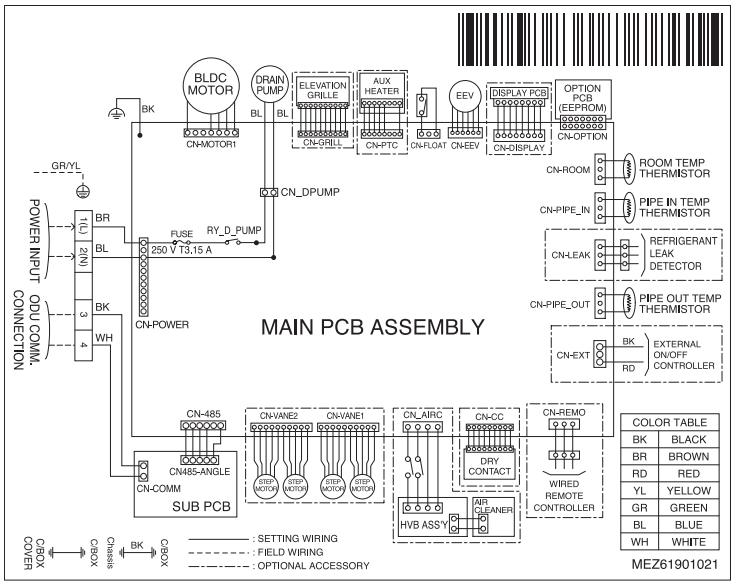

CONNECTOR NUMBER	LOCATION POINT	FUNCTION
CN-MOTOR1	Fan motor output	Motor output of BLDC
CN_DPUMP	Drain pump output	AC output for drain pump
CN-GRILL	Elevation grill	Elevation grill line
CN-PTC	Aux heater	Aux heater line
CN-LEAK	Refrigerant leak detector	Refrigerant leak detector line
CN-AIRC	Air cleaner	Air cleaner line
CN-DISPLAY	Display	Display of indoor status
CN-OPTION	Option pwb.	Communication between main and option
CN-EEV	EEV Output	EEV Control output
CN-FLOAT	Float switch input	Float switch sensing
CN-ROOM	Room sensor	Room air thermistor
CN-PIPE_IN	Suction pipe sensor	Pipe in thermistor
CN-PIPE_OUT	Discharge pipe sensor	Pipe out thermistor
CN-REMO	Remote controller	Remote control line
CN-CC	Dry contact	Dry contact line
CN-COMM	Communication	Communication between indoor and outdoor
CN-VANE1	Step motor	Step motor output
CN-VANE2	Step motor	Step motor output
CN-485	Communication	Connection between indoor and outdoor
CN-EXT	External On/Off	External On/Off signal input

Dip Switch Setting		Off	On	Remarks
SW3	GROUP	Master	Slave	Group Control setting using Wired Remote Controller
SW4	DRY CONTACT	Variable	Auto	Old Dry Contact Mode Setting 1. Variable : Auto/Manual Mode can be chosen by Wide wired remote controller or Wireless remote controller (When shipped from Factory → Manual Mode) 2. Auto : For Dry Contact, it is always Auto mode.
SW5	EXTRA 1	Off	On	1. Duct model -. OFF : Default(not operate continuosly) -. ON : Fan operate continuosly 2. Cassette Model : No Function 3. Ceiling Suspended Model -. OFF : Ceiling(default) -. ON : Floor

⚠ CAUTION

For Multi V models, Dip switch 1,2,6,7,8 must be set OFF
Those are used for the other model.

5. Wiring Diagrams

TM/TN/TP Chassis

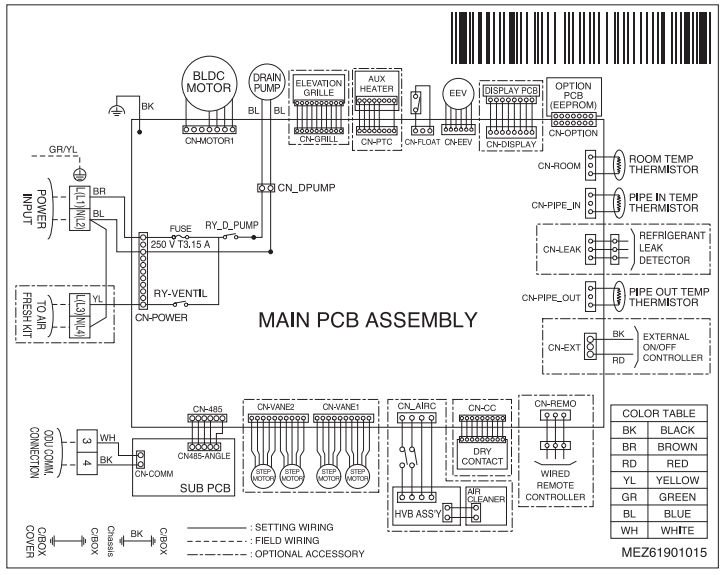

CONNECTOR NUMBER	LOCATION POINT	FUNCTION
CN-MOTOR1	Fan motor output	Motor output of BLDC
CN_DPUMP	Drain pump output	AC output for drain pump
CN-GRILL	Elevation grill	Elevation grill line
CN-PTC	Aux heater	Aux heater line
CN-LEAK	Refrigerant leak detector	Refrigerant leak detector line
CN-AIRC	Air cleaner	Air cleaner line
CN-DISPLAY	Display	Display of indoor status
CN-OPTION	Option pwb.	Communication between main and option
CN-EEV	EEV Output	EEV Control output
CN-FLOAT	Float switch input	Float switch sensing
CN-ROOM	Room sensor	Room air thermistor
CN-PIPE_IN	Suction pipe sensor	Pipe in thermistor
CN-PIPE_OUT	Discharge pipe sensor	Pipe out thermistor
CN-REMO	Remote controller	Remote control line
CN-CC	Dry contact	Dry contact line
CN-COMM	Communication	Communication between indoor and outdoor
CN-VANE1	Step motor	Step motor output
CN-VANE2	Step motor	Step motor output
CN-485	Communication	Connection between indoor and outdoor
CN-EXT	External On/Off	External On/Off signal input

Dip Switch Setting		Off	On	Remarks
SW3	GROUP	Master	Slave	Group Control setting using Wired Remote Controller
SW4	DRY CONTACT	Variable	Auto	Old Dry Contact Mode Setting 1. Variable : Auto/Manual Mode can be chosen by Wide wired remote controller or Wireless remote controller (When shipped from Factory → Manual Mode) 2. Auto : For Dry Contact, it is always Auto mode.
SW5	EXTRA 1	Off	On	1. Duct model -. OFF : Default(not operate continuosly) -. ON : Fan operate continuosly 2. Cassette Model : No Function 3. Ceiling Suspended Model -. OFF : Ceiling(default) -. ON : Floor

⚠ CAUTION

For Multi V models, Dip switch 1,2,6,7,8 must be set OFF
Those are used for the other model.

6. Capacity Tables

6.1 Cooling Capacity

Cooling capacity

Capacity Index	Outdoor air temp. (DB, °C)	Indoor air temp. (DB/WB, °C)													
		20		23		26		27		28		30		32	
		14		16		18		19		20		22		24	
		TC	SHC	TC	SHC	TC	SHC	TC	SHC	TC	SHC	TC	SHC	TC	SHC
		kW	kW	kW	kW	kW	kW	kW	kW	kW	kW	kW	kW	kW	kW
1.6	10	1.1	1.0	1.3	1.1	1.5	1.2	1.6	1.2	1.7	1.2	1.9	1.3	2.1	1.3
	12	1.1	1.0	1.3	1.1	1.5	1.2	1.6	1.2	1.7	1.2	1.9	1.3	2.1	1.3
	14	1.1	1.0	1.3	1.1	1.5	1.2	1.6	1.2	1.7	1.2	1.9	1.3	2.1	1.2
	16	1.1	1.0	1.3	1.1	1.5	1.2	1.6	1.2	1.7	1.2	1.9	1.3	2.0	1.2
	18	1.1	1.0	1.3	1.1	1.5	1.2	1.6	1.2	1.7	1.2	1.9	1.3	2.0	1.2
	20	1.1	1.0	1.3	1.1	1.5	1.2	1.6	1.2	1.7	1.2	1.9	1.3	2.0	1.2
	21	1.1	1.0	1.3	1.1	1.5	1.2	1.6	1.2	1.7	1.2	1.9	1.3	2.0	1.2
	23	1.1	1.0	1.3	1.1	1.5	1.2	1.6	1.2	1.7	1.2	1.9	1.3	1.9	1.2
	25	1.1	1.0	1.3	1.1	1.5	1.2	1.6	1.2	1.7	1.2	1.9	1.3	1.9	1.2
	27	1.1	1.0	1.3	1.1	1.5	1.2	1.6	1.2	1.7	1.2	1.8	1.2	1.9	1.2
	29	1.1	1.0	1.3	1.1	1.5	1.2	1.6	1.2	1.7	1.2	1.8	1.2	1.8	1.1
	31	1.1	1.0	1.3	1.1	1.5	1.2	1.6	1.2	1.7	1.2	1.8	1.2	1.8	1.1
	33	1.1	1.0	1.3	1.1	1.5	1.2	1.6	1.2	1.7	1.2	1.8	1.2	1.8	1.1
	35	1.1	1.0	1.3	1.1	1.5	1.2	1.6	1.2	1.7	1.2	1.7	1.2	1.8	1.1
	37	1.1	1.0	1.3	1.1	1.5	1.2	1.6	1.2	1.7	1.2	1.7	1.2	1.7	1.1
	39	1.1	1.0	1.3	1.1	1.5	1.2	1.6	1.2	1.6	1.2	1.7	1.1	1.7	1.0
2.2	10	1.5	1.4	1.8	1.5	2.0	1.7	2.2	1.7	2.4	1.8	2.6	1.8	2.9	1.8
	12	1.5	1.4	1.8	1.5	2.0	1.7	2.2	1.7	2.4	1.8	2.6	1.8	2.9	1.8
	14	1.5	1.4	1.8	1.5	2.0	1.7	2.2	1.7	2.4	1.8	2.6	1.8	2.8	1.8
	16	1.5	1.4	1.8	1.5	2.0	1.7	2.2	1.7	2.4	1.8	2.6	1.8	2.8	1.7
	18	1.5	1.4	1.8	1.5	2.0	1.7	2.2	1.7	2.4	1.8	2.6	1.8	2.7	1.7
	20	1.5	1.4	1.8	1.5	2.0	1.7	2.2	1.7	2.4	1.8	2.6	1.8	2.7	1.7
	21	1.5	1.4	1.8	1.5	2.0	1.7	2.2	1.7	2.4	1.8	2.6	1.8	2.7	1.7
	23	1.5	1.4	1.8	1.5	2.0	1.7	2.2	1.7	2.4	1.8	2.6	1.8	2.6	1.7
	25	1.5	1.4	1.8	1.5	2.0	1.7	2.2	1.7	2.4	1.8	2.6	1.8	2.6	1.6
	27	1.5	1.4	1.8	1.5	2.0	1.7	2.2	1.7	2.4	1.8	2.5	1.8	2.6	1.6
	29	1.5	1.4	1.8	1.5	2.0	1.7	2.2	1.7	2.4	1.8	2.5	1.7	2.5	1.6
	31	1.5	1.4	1.8	1.5	2.0	1.7	2.2	1.7	2.4	1.8	2.5	1.7	2.5	1.6
	33	1.5	1.4	1.8	1.5	2.0	1.7	2.2	1.7	2.4	1.8	2.4	1.7	2.4	1.5
	35	1.5	1.4	1.8	1.5	2.0	1.7	2.2	1.7	2.4	1.8	2.4	1.7	2.4	1.5
	37	1.5	1.4	1.8	1.5	2.0	1.7	2.2	1.7	2.3	1.7	2.3	1.6	2.4	1.5
	39	1.5	1.4	1.8	1.5	2.0	1.7	2.2	1.7	2.2	1.7	2.3	1.6	2.4	1.5
2.8	10	1.9	1.6	2.2	1.8	2.6	2.0	2.8	2.0	3.0	2.1	3.4	2.2	3.7	2.1
	12	1.9	1.6	2.2	1.8	2.6	2.0	2.8	2.0	3.0	2.1	3.4	2.2	3.6	2.1
	14	1.9	1.6	2.2	1.8	2.6	2.0	2.8	2.0	3.0	2.1	3.4	2.2	3.6	2.1
	16	1.9	1.6	2.2	1.8	2.6	2.0	2.8	2.0	3.0	2.1	3.4	2.2	3.5	2.0
	18	1.9	1.6	2.2	1.8	2.6	2.0	2.8	2.0	3.0	2.1	3.4	2.2	3.5	2.0
	20	1.9	1.6	2.2	1.8	2.6	2.0	2.8	2.0	3.0	2.1	3.4	2.2	3.4	2.0
	21	1.9	1.6	2.2	1.8	2.6	2.0	2.8	2.0	3.0	2.1	3.4	2.2	3.4	2.0
	23	1.9	1.6	2.2	1.8	2.6	2.0	2.8	2.0	3.0	2.1	3.4	2.2	3.4	2.0
	25	1.9	1.6	2.2	1.8	2.6	2.0	2.8	2.0	3.0	2.1	3.3	2.1	3.3	1.9
	27	1.9	1.6	2.2	1.8	2.6	2.0	2.8	2.0	3.0	2.1	3.2	2.1	3.3	1.9
	29	1.9	1.6	2.2	1.8	2.6	2.0	2.8	2.0	3.0	2.1	3.2	2.0	3.2	1.9
	31	1.9	1.6	2.2	1.8	2.6	2.0	2.8	2.0	3.0	2.1	3.2	2.0	3.2	1.8
	33	1.9	1.6	2.2	1.8	2.6	2.0	2.8	2.0	3.0	2.1	3.1	2.0	3.1	1.8
	35	1.9	1.6	2.2	1.8	2.6	2.0	2.8	2.0	3.0	2.1	3.0	2.0	3.1	1.8
	37	1.9	1.6	2.2	1.8	2.6	2.0	2.8	2.0	2.9	2.0	3.0	1.9	3.0	1.8
	39	1.9	1.6	2.2	1.8	2.6	2.0	2.8	2.0	2.8	2.0	2.9	1.9	3.0	1.7

Notes:

TC: Total Capacity(kW)

SHC: Sensible Heat Capacity(kW)

1. Capacity tables show the representative value of conditions which may occur.
2. Refer to Capacity Correction Factor in the outdoor unit PDB for the actual performance data of each indoor unit and outdoor unit combination.

6. Capacity Tables

Cooling capacity

Capacity Index	Outdoor air temp. (DB, °C)	Indoor air temp. (DB/WB, °C)													
		20		23		26		27		28		30		32	
		14		16		18		19		20		22		24	
		TC	SHC	TC	SHC	TC	SHC	TC	SHC	TC	SHC	TC	SHC	TC	SHC
		kW	kW	kW	kW	kW	kW	kW	kW	kW	kW	kW	kW	kW	kW
3.6	10	2.4	2.1	2.9	2.3	3.3	2.5	3.6	2.5	3.9	2.6	4.3	2.7	4.7	2.6
	12	2.4	2.1	2.9	2.3	3.3	2.5	3.6	2.5	3.9	2.6	4.3	2.7	4.7	2.6
	14	2.4	2.1	2.9	2.3	3.3	2.5	3.6	2.5	3.9	2.6	4.3	2.7	4.6	2.6
	16	2.4	2.1	2.9	2.3	3.3	2.5	3.6	2.5	3.9	2.6	4.3	2.7	4.6	2.5
	18	2.4	2.1	2.9	2.3	3.3	2.5	3.6	2.5	3.9	2.6	4.3	2.7	4.5	2.5
	20	2.4	2.1	2.9	2.3	3.3	2.5	3.6	2.5	3.9	2.6	4.3	2.7	4.4	2.5
	21	2.4	2.1	2.9	2.3	3.3	2.5	3.6	2.5	3.9	2.6	4.3	2.7	4.4	2.5
	23	2.4	2.1	2.9	2.3	3.3	2.5	3.6	2.5	3.9	2.6	4.3	2.7	4.3	2.5
	25	2.4	2.1	2.9	2.3	3.3	2.5	3.6	2.5	3.9	2.6	4.3	2.6	4.3	2.4
	27	2.4	2.1	2.9	2.3	3.3	2.5	3.6	2.5	3.9	2.6	4.2	2.6	4.2	2.4
	29	2.4	2.1	2.9	2.3	3.3	2.5	3.6	2.5	3.9	2.6	4.1	2.5	4.2	2.4
	31	2.4	2.1	2.9	2.3	3.3	2.5	3.6	2.5	3.9	2.6	4.1	2.5	4.1	2.3
	33	2.4	2.1	2.9	2.3	3.3	2.5	3.6	2.5	3.9	2.6	4.0	2.5	4.0	2.3
	35	2.4	2.1	2.9	2.3	3.3	2.5	3.6	2.5	3.9	2.6	3.9	2.5	4.0	2.3
	37	2.4	2.1	2.9	2.3	3.3	2.5	3.6	2.5	3.8	2.5	3.8	2.4	3.9	2.2
	39	2.4	2.1	2.9	2.3	3.3	2.5	3.6	2.5	3.7	2.5	3.8	2.4	3.9	2.2
4.5	10	3.0	2.7	3.6	3.0	4.2	3.2	4.5	3.3	4.8	3.4	5.4	3.6	5.9	3.5
	12	3.0	2.7	3.6	3.0	4.2	3.2	4.5	3.3	4.8	3.4	5.4	3.6	5.8	3.5
	14	3.0	2.7	3.6	3.0	4.2	3.2	4.5	3.3	4.8	3.4	5.4	3.6	5.8	3.4
	16	3.0	2.7	3.6	3.0	4.2	3.2	4.5	3.3	4.8	3.4	5.4	3.6	5.7	3.4
	18	3.0	2.7	3.6	3.0	4.2	3.2	4.5	3.3	4.8	3.4	5.4	3.6	5.6	3.4
	20	3.0	2.7	3.6	3.0	4.2	3.2	4.5	3.3	4.8	3.4	5.4	3.6	5.5	3.3
	21	3.0	2.7	3.6	3.0	4.2	3.2	4.5	3.3	4.8	3.4	5.4	3.6	5.5	3.3
	23	3.0	2.7	3.6	3.0	4.2	3.2	4.5	3.3	4.8	3.4	5.4	3.6	5.4	3.2
	25	3.0	2.7	3.6	3.0	4.2	3.2	4.5	3.3	4.8	3.4	5.3	3.5	5.3	3.2
	27	3.0	2.7	3.6	3.0	4.2	3.2	4.5	3.3	4.8	3.4	5.2	3.4	5.3	3.2
	29	3.0	2.7	3.6	3.0	4.2	3.2	4.5	3.3	4.8	3.4	5.1	3.4	5.2	3.1
	31	3.0	2.7	3.6	3.0	4.2	3.2	4.5	3.3	4.8	3.4	5.1	3.3	5.1	3.0
	33	3.0	2.7	3.6	3.0	4.2	3.2	4.5	3.3	4.8	3.4	4.9	3.3	5.0	3.0
	35	3.0	2.7	3.6	3.0	4.2	3.2	4.5	3.3	4.8	3.4	4.9	3.2	4.9	3.0
	37	3.0	2.7	3.6	3.0	4.2	3.2	4.5	3.3	4.7	3.3	4.8	3.2	4.9	2.9
	39	3.0	2.7	3.6	3.0	4.2	3.2	4.5	3.3	4.6	3.2	4.7	3.1	4.8	2.8
5.6	10	3.8	3.2	4.5	3.5	5.2	3.8	5.6	3.9	6.0	4.1	6.7	4.2	7.3	4.1
	12	3.8	3.2	4.5	3.5	5.2	3.8	5.6	3.9	6.0	4.1	6.7	4.2	7.3	4.1
	14	3.8	3.2	4.5	3.5	5.2	3.8	5.6	3.9	6.0	4.1	6.7	4.2	7.2	4.1
	16	3.8	3.2	4.5	3.5	5.2	3.8	5.6	3.9	6.0	4.1	6.7	4.2	7.1	4.0
	18	3.8	3.2	4.5	3.5	5.2	3.8	5.6	3.9	6.0	4.1	6.7	4.2	6.9	4.0
	20	3.8	3.2	4.5	3.5	5.2	3.8	5.6	3.9	6.0	4.1	6.7	4.2	6.9	3.9
	21	3.8	3.2	4.5	3.5	5.2	3.8	5.6	3.9	6.0	4.1	6.7	4.2	6.9	3.9
	23	3.8	3.2	4.5	3.5	5.2	3.8	5.6	3.9	6.0	4.1	6.7	4.2	6.7	3.8
	25	3.8	3.2	4.5	3.5	5.2	3.8	5.6	3.9	6.0	4.1	6.6	4.1	6.6	3.7
	27	3.8	3.2	4.5	3.5	5.2	3.8	5.6	3.9	6.0	4.1	6.5	4.1	6.5	3.7
	29	3.8	3.2	4.5	3.5	5.2	3.8	5.6	3.9	6.0	4.1	6.4	4.0	6.5	3.7
	31	3.8	3.2	4.5	3.5	5.2	3.8	5.6	3.9	6.0	4.1	6.3	3.9	6.4	3.6
	33	3.8	3.2	4.5	3.5	5.2	3.8	5.6	3.9	6.0	4.1	6.2	3.9	6.2	3.5
	35	3.8	3.2	4.5	3.5	5.2	3.8	5.6	3.9	6.0	4.1	6.1	3.8	6.2	3.5
	37	3.8	3.2	4.5	3.5	5.2	3.8	5.6	3.9	5.8	3.9	5.9	3.7	6.1	3.4
	39	3.8	3.2	4.5	3.5	5.2	3.8	5.6	3.9	5.7	3.8	5.8	3.7	6.0	3.4

Notes:

TC: Total Capacity(kW)

SHC: Sensible Heat Capacity(kW)

1. Capacity tables show the representative value of conditions which may occur.
2. Refer to Capacity Correction Factor in the outdoor unit PDB for the actual performance data of each indoor unit and outdoor unit combination.

6. Capacity Tables

Cooling capacity

Capacity Index	Outdoor air temp. (DB, °C)	Indoor air temp. (DB/WB, °C)													
		20		23		26		27		28		30		32	
		14		16		18		19		20		22		24	
		TC	SHC	TC	SHC	TC	SHC	TC	SHC	TC	SHC	TC	SHC	TC	SHC
		kW	kW	kW	kW	kW	kW	kW	kW	kW	kW	kW	kW	kW	kW
6.2	10	4.1	3.4	4.8	3.8	5.6	4.1	6.0	4.2	6.4	4.3	7.2	4.5	7.9	4.4
	12	4.1	3.4	4.8	3.8	5.6	4.1	6.0	4.2	6.4	4.3	7.2	4.5	7.8	4.4
	14	4.1	3.4	4.8	3.8	5.6	4.1	6.0	4.2	6.4	4.3	7.2	4.5	7.7	4.3
	16	4.1	3.4	4.8	3.8	5.6	4.1	6.0	4.2	6.4	4.3	7.2	4.5	7.6	4.3
	18	4.1	3.4	4.8	3.8	5.6	4.1	6.0	4.2	6.4	4.3	7.2	4.5	7.4	4.3
	20	4.1	3.4	4.8	3.8	5.6	4.1	6.0	4.2	6.4	4.3	7.2	4.5	7.4	4.2
	21	4.1	3.4	4.8	3.8	5.6	4.1	6.0	4.2	6.4	4.3	7.2	4.5	7.4	4.2
	23	4.1	3.4	4.8	3.8	5.6	4.1	6.0	4.2	6.4	4.3	7.2	4.5	7.2	4.1
	25	4.1	3.4	4.8	3.8	5.6	4.1	6.0	4.2	6.4	4.3	7.1	4.4	7.1	4.0
	27	4.1	3.4	4.8	3.8	5.6	4.1	6.0	4.2	6.4	4.3	6.9	4.3	7.0	4.0
	29	4.1	3.4	4.8	3.8	5.6	4.1	6.0	4.2	6.4	4.3	6.8	4.3	6.9	3.9
	31	4.1	3.4	4.8	3.8	5.6	4.1	6.0	4.2	6.4	4.3	6.8	4.2	6.8	3.9
	33	4.1	3.4	4.8	3.8	5.6	4.1	6.0	4.2	6.4	4.3	6.6	4.2	6.7	3.8
	35	4.1	3.4	4.8	3.8	5.6	4.1	6.0	4.2	6.4	4.3	6.5	4.1	6.6	3.8
	37	4.1	3.4	4.8	3.8	5.6	4.1	6.0	4.2	6.3	4.2	6.3	4.0	6.5	3.7
	39	4.1	3.4	4.8	3.8	5.6	4.1	6.0	4.2	6.1	4.1	6.3	3.9	6.4	3.6
7.1	10	4.8	4.2	5.7	4.6	6.6	5.0	7.1	5.1	7.6	5.3	8.5	5.5	9.3	5.4
	12	4.8	4.2	5.7	4.6	6.6	5.0	7.1	5.1	7.6	5.3	8.5	5.5	9.2	5.4
	14	4.8	4.2	5.7	4.6	6.6	5.0	7.1	5.1	7.6	5.3	8.5	5.5	9.1	5.3
	16	4.8	4.2	5.7	4.6	6.6	5.0	7.1	5.1	7.6	5.3	8.5	5.5	9.0	5.2
	18	4.8	4.2	5.7	4.6	6.6	5.0	7.1	5.1	7.6	5.3	8.5	5.5	8.8	5.2
	20	4.8	4.2	5.7	4.6	6.6	5.0	7.1	5.1	7.6	5.3	8.5	5.5	8.7	5.1
	21	4.8	4.2	5.7	4.6	6.6	5.0	7.1	5.1	7.6	5.3	8.5	5.5	8.7	5.1
	23	4.8	4.2	5.7	4.6	6.6	5.0	7.1	5.1	7.6	5.3	8.5	5.5	8.5	5.0
	25	4.8	4.2	5.7	4.6	6.6	5.0	7.1	5.1	7.6	5.3	8.4	5.4	8.4	4.9
	27	4.8	4.2	5.7	4.6	6.6	5.0	7.1	5.1	7.6	5.3	8.2	5.3	8.3	4.9
	29	4.8	4.2	5.7	4.6	6.6	5.0	7.1	5.1	7.6	5.3	8.1	5.2	8.2	4.8
	31	4.8	4.2	5.7	4.6	6.6	5.0	7.1	5.1	7.6	5.3	8.0	5.1	8.1	4.7
	33	4.8	4.2	5.7	4.6	6.6	5.0	7.1	5.1	7.6	5.3	7.8	5.1	7.9	4.6
	35	4.8	4.2	5.7	4.6	6.6	5.0	7.1	5.1	7.6	5.3	7.7	5.0	7.8	4.6
	37	4.8	4.2	5.7	4.6	6.6	5.0	7.1	5.1	7.4	5.1	7.5	4.9	7.7	4.5
	39	4.8	4.2	5.7	4.6	6.6	5.0	7.1	5.1	7.2	5.0	7.4	4.8	7.6	4.4
8.2	10	5.5	4.9	6.6	5.4	7.7	5.8	8.2	5.9	8.7	6.1	9.8	6.4	10.8	6.3
	12	5.5	4.9	6.6	5.4	7.7	5.8	8.2	5.9	8.7	6.1	9.8	6.4	10.6	6.2
	14	5.5	4.9	6.6	5.4	7.7	5.8	8.2	5.9	8.7	6.1	9.8	6.4	10.5	6.1
	16	5.5	4.9	6.6	5.4	7.7	5.8	8.2	5.9	8.7	6.1	9.8	6.4	10.4	6.1
	18	5.5	4.9	6.6	5.4	7.7	5.8	8.2	5.9	8.7	6.1	9.8	6.4	10.2	6.0
	20	5.5	4.9	6.6	5.4	7.7	5.8	8.2	5.9	8.7	6.1	9.8	6.4	10.1	5.9
	21	5.5	4.9	6.6	5.4	7.7	5.8	8.2	5.9	8.7	6.1	9.8	6.4	10.0	5.8
	23	5.5	4.9	6.6	5.4	7.7	5.8	8.2	5.9	8.7	6.1	9.8	6.4	9.9	5.8
	25	5.5	4.9	6.6	5.4	7.7	5.8	8.2	5.9	8.7	6.1	9.7	6.3	9.7	5.7
	27	5.5	4.9	6.6	5.4	7.7	5.8	8.2	5.9	8.7	6.1	9.4	6.1	9.6	5.6
	29	5.5	4.9	6.6	5.4	7.7	5.8	8.2	5.9	8.7	6.1	9.3	6.1	9.5	5.5
	31	5.5	4.9	6.6	5.4	7.7	5.8	8.2	5.9	8.7	6.1	9.2	5.9	9.3	5.4
	33	5.5	4.9	6.6	5.4	7.7	5.8	8.2	5.9	8.7	6.1	9.0	5.8	9.2	5.4
	35	5.5	4.9	6.6	5.4	7.7	5.8	8.2	5.9	8.7	6.1	8.9	5.7	9.0	5.3
	37	5.5	4.9	6.6	5.4	7.7	5.8	8.2	5.9	8.5	5.9	8.7	5.6	8.9	5.2
	39	5.5	4.9	6.6	5.4	7.7	5.8	8.2	5.9	8.4	5.8	8.5	5.5	8.8	5.1

Notes:

TC: Total Capacity(kW)

SHC: Sensible Heat Capacity(kW)

1. Capacity tables show the representative value of conditions which may occur.
2. Refer to Capacity Correction Factor in the outdoor unit PDB for the actual performance data of each indoor unit and outdoor unit combination.

6. Capacity Tables

Cooling capacity

Capacity Index	Outdoor air temp. (DB, °C)	Indoor air temp. (DB/WB, °C)													
		20		23		26		27		28		30		32	
		14		16		18		19		20		22		24	
		TC	SHC	TC	SHC	TC	SHC	TC	SHC	TC	SHC	TC	SHC	TC	SHC
		kW	kW	kW	kW	kW	kW	kW	kW	kW	kW	kW	kW	kW	kW
9.0	10	6.1	5.3	7.2	5.8	8.4	6.3	9.0	6.5	9.6	6.7	10.8	7.0	11.8	6.9
	12	6.1	5.3	7.2	5.8	8.4	6.3	9.0	6.5	9.6	6.7	10.8	7.0	11.7	6.9
	14	6.1	5.3	7.2	5.8	8.4	6.3	9.0	6.5	9.6	6.7	10.8	7.0	11.5	6.7
	16	6.1	5.3	7.2	5.8	8.4	6.3	9.0	6.5	9.6	6.7	10.8	7.0	11.4	6.6
	18	6.1	5.3	7.2	5.8	8.4	6.3	9.0	6.5	9.6	6.7	10.8	7.0	11.2	6.6
	20	6.1	5.3	7.2	5.8	8.4	6.3	9.0	6.5	9.6	6.7	10.8	7.0	11.0	6.5
	21	6.1	5.3	7.2	5.8	8.4	6.3	9.0	6.5	9.6	6.7	10.8	7.0	11.0	6.5
	23	6.1	5.3	7.2	5.8	8.4	6.3	9.0	6.5	9.6	6.7	10.8	7.0	10.8	6.3
	25	6.1	5.3	7.2	5.8	8.4	6.3	9.0	6.5	9.6	6.7	10.6	6.9	10.6	6.2
	27	6.1	5.3	7.2	5.8	8.4	6.3	9.0	6.5	9.6	6.7	10.4	6.7	10.5	6.2
	29	6.1	5.3	7.2	5.8	8.4	6.3	9.0	6.5	9.6	6.7	10.3	6.6	10.4	6.1
	31	6.1	5.3	7.2	5.8	8.4	6.3	9.0	6.5	9.6	6.7	10.1	6.5	10.3	6.0
	33	6.1	5.3	7.2	5.8	8.4	6.3	9.0	6.5	9.6	6.7	9.9	6.5	10.0	5.8
	35	6.1	5.3	7.2	5.8	8.4	6.3	9.0	6.5	9.6	6.7	9.8	6.3	9.9	5.8
	37	6.1	5.3	7.2	5.8	8.4	6.3	9.0	6.5	9.4	6.5	9.5	6.2	9.8	5.7
	39	6.1	5.3	7.2	5.8	8.4	6.3	9.0	6.5	9.1	6.3	9.4	6.1	9.6	5.6
10.6	10	7.2	6.3	8.5	6.9	9.9	7.5	10.6	7.6	11.3	7.9	12.7	8.2	13.9	8.1
	12	7.2	6.3	8.5	6.9	9.9	7.5	10.6	7.6	11.3	7.9	12.7	8.2	13.7	8.0
	14	7.2	6.3	8.5	6.9	9.9	7.5	10.6	7.6	11.3	7.9	12.7	8.2	13.6	7.9
	16	7.2	6.3	8.5	6.9	9.9	7.5	10.6	7.6	11.3	7.9	12.7	8.2	13.4	7.8
	18	7.2	6.3	8.5	6.9	9.9	7.5	10.6	7.6	11.3	7.9	12.7	8.2	13.2	7.7
	20	7.2	6.3	8.5	6.9	9.9	7.5	10.6	7.6	11.3	7.9	12.7	8.2	13.0	7.6
	21	7.2	6.3	8.5	6.9	9.9	7.5	10.6	7.6	11.3	7.9	12.7	8.2	12.9	7.6
	23	7.2	6.3	8.5	6.9	9.9	7.5	10.6	7.6	11.3	7.9	12.7	8.2	12.8	7.5
	25	7.2	6.3	8.5	6.9	9.9	7.5	10.6	7.6	11.3	7.9	12.5	8.1	12.6	7.3
	27	7.2	6.3	8.5	6.9	9.9	7.5	10.6	7.6	11.3	7.9	12.2	7.9	12.4	7.3
	29	7.2	6.3	8.5	6.9	9.9	7.5	10.6	7.6	11.3	7.9	12.1	7.8	12.2	7.1
	31	7.2	6.3	8.5	6.9	9.9	7.5	10.6	7.6	11.3	7.9	11.9	7.7	12.0	7.0
	33	7.2	6.3	8.5	6.9	9.9	7.5	10.6	7.6	11.3	7.9	11.7	7.6	11.8	6.9
	35	7.2	6.3	8.5	6.9	9.9	7.5	10.6	7.6	11.3	7.9	11.4	7.4	11.7	6.8
	37	7.2	6.3	8.5	6.9	9.9	7.5	10.6	7.6	11.0	7.7	11.2	7.3	11.5	6.7
	39	7.2	6.3	8.5	6.9	9.9	7.5	10.6	7.6	10.8	7.5	11.0	7.1	11.3	6.6
12.3	10	8.3	7.3	9.9	8.0	11.5	8.7	12.3	8.9	13.1	9.1	14.7	9.5	16.2	9.4
	12	8.3	7.3	9.9	8.0	11.5	8.7	12.3	8.9	13.1	9.1	14.7	9.5	15.9	9.3
	14	8.3	7.3	9.9	8.0	11.5	8.7	12.3	8.9	13.1	9.1	14.7	9.5	15.8	9.2
	16	8.3	7.3	9.9	8.0	11.5	8.7	12.3	8.9	13.1	9.1	14.7	9.5	15.6	9.1
	18	8.3	7.3	9.9	8.0	11.5	8.7	12.3	8.9	13.1	9.1	14.7	9.5	15.3	9.0
	20	8.3	7.3	9.9	8.0	11.5	8.7	12.3	8.9	13.1	9.1	14.7	9.5	15.1	8.8
	21	8.3	7.3	9.9	8.0	11.5	8.7	12.3	8.9	13.1	9.1	14.7	9.5	15.0	8.8
	23	8.3	7.3	9.9	8.0	11.5	8.7	12.3	8.9	13.1	9.1	14.7	9.5	14.8	8.6
	25	8.3	7.3	9.9	8.0	11.5	8.7	12.3	8.9	13.1	9.1	14.5	9.4	14.6	8.5
	27	8.3	7.3	9.9	8.0	11.5	8.7	12.3	8.9	13.1	9.1	14.1	9.2	14.4	8.4
	29	8.3	7.3	9.9	8.0	11.5	8.7	12.3	8.9	13.1	9.1	14.0	9.1	14.2	8.3
	31	8.3	7.3	9.9	8.0	11.5	8.7	12.3	8.9	13.1	9.1	13.8	8.9	14.0	8.2
	33	8.3	7.3	9.9	8.0	11.5	8.7	12.3	8.9	13.1	9.1	13.5	8.8	13.7	8.0
	35	8.3	7.3	9.9	8.0	11.5	8.7	12.3	8.9	13.1	9.1	13.3	8.6	13.5	7.9
	37	8.3	7.3	9.9	8.0	11.5	8.7	12.3	8.9	12.8	8.9	13.0	8.4	13.4	7.8
	39	8.3	7.3	9.9	8.0	11.5	8.7	12.3	8.9	12.5	8.7	12.8	8.3	13.1	7.7

Notes:

TC: Total Capacity(kW)

SHC: Sensible Heat Capacity(kW)

1. Capacity tables show the representative value of conditions which may occur.
2. Refer to Capacity Correction Factor in the outdoor unit PDB for the actual performance data of each indoor unit and outdoor unit combination.

6. Capacity Tables

Cooling capacity

Capacity Index	Outdoor air temp. (DB, °C)	Indoor air temp. (DB/WB, °C)													
		20		23		26		27		28		30		32	
		14		16		18		19		20		22		24	
		TC	SHC	TC	SHC	TC	SHC	TC	SHC	TC	SHC	TC	SHC	TC	SHC
		kW	kW	kW	kW	kW	kW	kW	kW	kW	kW	kW	kW	kW	kW
14.1	10	9.5	8.3	11.3	9.2	13.2	10.0	14.1	10.2	15.0	10.5	16.9	10.9	18.5	10.8
	12	9.5	8.3	11.3	9.2	13.2	10.0	14.1	10.2	15.0	10.5	16.9	10.9	18.3	10.7
	14	9.5	8.3	11.3	9.2	13.2	10.0	14.1	10.2	15.0	10.5	16.9	10.9	18.1	10.6
	16	9.5	8.3	11.3	9.2	13.2	10.0	14.1	10.2	15.0	10.5	16.9	10.9	17.8	10.4
	18	9.5	8.3	11.3	9.2	13.2	10.0	14.1	10.2	15.0	10.5	16.9	10.9	17.6	10.3
	20	9.5	8.3	11.3	9.2	13.2	10.0	14.1	10.2	15.0	10.5	16.9	10.9	17.3	10.1
	21	9.5	8.3	11.3	9.2	13.2	10.0	14.1	10.2	15.0	10.5	16.9	10.9	17.2	10.1
	23	9.5	8.3	11.3	9.2	13.2	10.0	14.1	10.2	15.0	10.5	16.9	10.9	17.0	9.9
	25	9.5	8.3	11.3	9.2	13.2	10.0	14.1	10.2	15.0	10.5	16.6	10.8	16.7	9.8
	27	9.5	8.3	11.3	9.2	13.2	10.0	14.1	10.2	15.0	10.5	16.2	10.5	16.5	9.6
	29	9.5	8.3	11.3	9.2	13.2	10.0	14.1	10.2	15.0	10.5	16.1	10.4	16.3	9.5
	31	9.5	8.3	11.3	9.2	13.2	10.0	14.1	10.2	15.0	10.5	15.8	10.2	16.0	9.4
	33	9.5	8.3	11.3	9.2	13.2	10.0	14.1	10.2	15.0	10.5	15.5	10.0	15.8	9.2
	35	9.5	8.3	11.3	9.2	13.2	10.0	14.1	10.2	15.0	10.5	15.2	9.9	15.5	9.1
	37	9.5	8.3	11.3	9.2	13.2	10.0	14.1	10.2	14.7	10.2	14.9	9.7	15.3	8.9
	39	9.5	8.3	11.3	9.2	13.2	10.0	14.1	10.2	14.4	10.0	14.7	9.5	15.1	8.8
15.8	10	10.7	9.4	12.7	10.3	14.7	11.2	15.8	11.4	16.9	11.9	18.9	12.3	20.7	12.1
	12	10.7	9.4	12.7	10.3	14.7	11.2	15.8	11.4	16.9	11.9	18.9	12.3	20.5	12.1
	14	10.7	9.4	12.7	10.3	14.7	11.2	15.8	11.4	16.9	11.9	18.9	12.3	20.3	11.9
	16	10.7	9.4	12.7	10.3	14.7	11.2	15.8	11.4	16.9	11.9	18.9	12.3	20.0	11.7
	18	10.7	9.4	12.7	10.3	14.7	11.2	15.8	11.4	16.9	11.9	18.9	12.3	19.6	11.7
	20	10.7	9.4	12.7	10.3	14.7	11.2	15.8	11.4	16.9	11.9	18.9	12.3	19.4	11.4
	21	10.7	9.4	12.7	10.3	14.7	11.2	15.8	11.4	16.9	11.9	18.9	12.3	19.4	11.4
	23	10.7	9.4	12.7	10.3	14.7	11.2	15.8	11.4	16.9	11.9	18.9	12.3	18.9	11.2
	25	10.7	9.4	12.7	10.3	14.7	11.2	15.8	11.4	16.9	11.9	18.7	12.1	18.7	11.0
	27	10.7	9.4	12.7	10.3	14.7	11.2	15.8	11.4	16.9	11.9	18.2	11.9	18.5	11.0
	29	10.7	9.4	12.7	10.3	14.7	11.2	15.8	11.4	16.9	11.9	18.0	11.7	18.2	10.8
	31	10.7	9.4	12.7	10.3	14.7	11.2	15.8	11.4	16.9	11.9	17.8	11.4	18.0	10.5
	33	10.7	9.4	12.7	10.3	14.7	11.2	15.8	11.4	16.9	11.9	17.4	11.4	17.6	10.3
	35	10.7	9.4	12.7	10.3	14.7	11.2	15.8	11.4	16.9	11.9	17.1	11.2	17.4	10.3
	37	10.7	9.4	12.7	10.3	14.7	11.2	15.8	11.4	16.5	11.4	16.7	11.0	17.1	10.1
	39	10.7	9.4	12.7	10.3	14.7	11.2	15.8	11.4	16.0	11.2	16.5	10.8	16.9	9.9

Notes:
TC: Total Capacity(kW)
SHC: Sensible Heat Capacity(kW)
1. Capacity tables show the representative value of conditions which may occur.
2. Refer to Capacity Correction Factor in the outdoor unit PDB for the actual performance data of each indoor unit and outdoor unit combination.

6. Capacity Tables

6.2 Heating Capacity

Heating capacity

Capacity Index	Outdoor air temp.		Indoor air temp. (DB, °C)					
			16	18	20	21	22	24
	DB(°C)	WB(°C)	TC	TC	TC	TC	TC	TC
			kW	kW	kW	kW	kW	kW
1.6	-24.8	-25.0	1.0	1.0	1.0	1.0	1.0	1.0
	-21.8	-22.0	1.3	1.3	1.3	1.3	1.3	1.2
	-19.8	-20.0	1.3	1.3	1.3	1.3	1.3	1.3
	-18.8	-19.0	1.4	1.3	1.3	1.3	1.3	1.3
	-16.7	-17.0	1.4	1.4	1.4	1.4	1.4	1.4
	-14.7	-15.0	1.5	1.5	1.5	1.5	1.5	1.5
	-12.6	-13.0	1.6	1.6	1.6	1.6	1.5	1.5
	-10.5	-11.0	1.6	1.6	1.6	1.6	1.6	1.6
	-9.5	-10.0	1.7	1.7	1.7	1.7	1.7	1.6
	-8.5	-9.1	1.7	1.7	1.7	1.7	1.7	1.6
	-7.0	-7.6	1.7	1.7	1.7	1.7	1.7	1.6
	-5.0	-5.6	1.8	1.8	1.8	1.7	1.7	1.6
	-3.0	-3.7	1.9	1.8	1.8	1.7	1.7	1.6
	0.0	-0.7	1.9	1.9	1.8	1.7	1.7	1.6
	3.0	2.2	2.0	1.9	1.8	1.7	1.7	1.6
	5.0	4.1	2.0	1.9	1.8	1.7	1.7	1.6
	7.0	6.0	2.0	1.9	1.8	1.7	1.7	1.6
	9.0	7.9	2.0	1.9	1.8	1.7	1.7	1.6
	11.0	9.8	2.0	1.9	1.8	1.7	1.7	1.6
	13.0	11.8	2.0	1.9	1.8	1.7	1.7	1.6
	15.0	13.7	2.0	1.9	1.8	1.7	1.7	1.6
2.2	-24.8	-25.0	1.4	1.4	1.4	1.4	1.4	1.4
	-21.8	-22.0	1.7	1.7	1.7	1.7	1.7	1.7
	-19.8	-20.0	1.8	1.8	1.8	1.8	1.8	1.8
	-18.8	-19.0	1.9	1.9	1.9	1.9	1.9	1.9
	-16.7	-17.0	2.0	2.0	2.0	2.0	2.0	2.0
	-14.7	-15.0	2.1	2.1	2.1	2.1	2.1	2.0
	-12.6	-13.0	2.2	2.2	2.2	2.2	2.1	2.1
	-10.5	-11.0	2.3	2.3	2.2	2.2	2.2	2.2
	-9.5	-10.0	2.3	2.3	2.3	2.3	2.3	2.2
	-8.5	-9.1	2.3	2.3	2.3	2.3	2.3	2.2
	-7.0	-7.6	2.4	2.4	2.4	2.4	2.3	2.2
	-5.0	-5.6	2.5	2.5	2.5	2.4	2.3	2.2
	-3.0	-3.7	2.6	2.6	2.5	2.4	2.3	2.2
	0.0	-0.7	2.7	2.6	2.5	2.4	2.3	2.2
	3.0	2.2	2.7	2.7	2.5	2.4	2.3	2.2
	5.0	4.1	2.8	2.7	2.5	2.4	2.3	2.2
	7.0	6.0	2.8	2.7	2.5	2.4	2.3	2.2
	9.0	7.9	2.8	2.7	2.5	2.4	2.3	2.2
	11.0	9.8	2.8	2.7	2.5	2.4	2.3	2.2
	13.0	11.8	2.8	2.7	2.5	2.4	2.3	2.2
	15.0	13.7	2.8	2.7	2.5	2.4	2.3	2.2
2.8	-24.8	-25.0	1.9	1.9	1.8	1.8	1.8	1.8
	-21.8	-22.0	2.2	2.2	2.2	2.2	2.2	2.2
	-19.8	-20.0	2.4	2.4	2.3	2.3	2.3	2.3
	-18.8	-19.0	2.4	2.4	2.4	2.4	2.4	2.4
	-16.7	-17.0	2.5	2.5	2.5	2.5	2.5	2.5
	-14.7	-15.0	2.7	2.7	2.6	2.6	2.6	2.6
	-12.6	-13.0	2.8	2.8	2.8	2.8	2.7	2.7
	-10.5	-11.0	2.9	2.9	2.9	2.9	2.9	2.8
	-9.5	-10.0	3.0	3.0	2.9	2.9	2.9	2.8
	-8.5	-9.1	3.0	3.0	3.0	3.0	3.0	2.8
	-7.0	-7.6	3.1	3.1	3.1	3.1	3.0	2.8
	-5.0	-5.6	3.2	3.2	3.2	3.1	3.0	2.8
	-3.0	-3.7	3.4	3.3	3.2	3.1	3.0	2.8
	0.0	-0.7	3.4	3.3	3.2	3.1	3.0	2.8
	3.0	2.2	3.5	3.4	3.2	3.1	3.0	2.8
	5.0	4.1	3.6	3.4	3.2	3.1	3.0	2.8
	7.0	6.0	3.6	3.4	3.2	3.1	3.0	2.8
	9.0	7.9	3.6	3.4	3.2	3.1	3.0	2.8
	11.0	9.8	3.6	3.4	3.2	3.1	3.0	2.8
	13.0	11.8	3.6	3.4	3.2	3.1	3.0	2.8
	15.0	13.7	3.6	3.4	3.2	3.1	3.0	2.8

Notes:
TC: Total Capacity(kW)
1. Capacity tables show the representative value of conditions which may occur.
2. is shown as reference. When selecting the outdoor units, avoid the outdoor air temperature range shown by .
3. In accordance with operation limits of outdoor unit, applicable range of capacity tables is different.
4. Refer to Capacity Correction Factor in the outdoor unit PDB for the actual performance data of each indoor unit and outdoor unit combination.

6. Capacity Tables

Heating capacity

Capacity Index	Outdoor air temp.		Indoor air temp. (DB, °C)					
			16	18	20	21	22	24
	DB(°C)	WB(°C)	TC	TC	TC	TC	TC	TC
			kW	kW	kW	kW	kW	kW
3.6	-24.8	-25.0	2.3	2.3	2.3	2.3	2.3	2.3
	-21.8	-22.0	2.8	2.8	2.8	2.8	2.8	2.8
	-19.8	-20.0	2.9	2.9	2.9	2.9	2.9	2.9
	-18.8	-19.0	3.0	3.0	3.0	3.0	3.0	3.0
	-16.7	-17.0	3.1	3.1	3.1	3.1	3.1	3.1
	-14.7	-15.0	3.3	3.3	3.3	3.3	3.3	3.3
	-12.6	-13.0	3.5	3.4	3.4	3.4	3.4	3.4
	-10.5	-11.0	3.6	3.6	3.6	3.6	3.6	3.5
	-9.5	-10.0	3.7	3.7	3.7	3.7	3.7	3.5
	-8.5	-9.1	3.8	3.8	3.7	3.7	3.7	3.5
	-7.0	-7.6	3.9	3.9	3.9	3.8	3.7	3.5
	-5.0	-5.6	4.0	4.0	4.0	3.9	3.7	3.5
	-3.0	-3.7	4.2	4.1	4.0	3.9	3.7	3.5
	0.0	-0.7	4.3	4.1	4.0	3.9	3.7	3.5
	3.0	2.2	4.4	4.3	4.0	3.9	3.7	3.5
	5.0	4.1	4.5	4.3	4.0	3.9	3.7	3.5
	7.0	6.0	4.5	4.3	4.0	3.9	3.7	3.5
	9.0	7.9	4.5	4.3	4.0	3.9	3.7	3.5
	11.0	9.8	4.5	4.3	4.0	3.9	3.7	3.5
	13.0	11.8	4.5	4.3	4.0	3.9	3.7	3.5
	15.0	13.7	4.5	4.3	4.0	3.9	3.7	3.5
4.5	-24.8	-25.0	2.9	2.9	2.9	2.9	2.9	2.9
	-21.8	-22.0	3.5	3.5	3.5	3.5	3.5	3.5
	-19.8	-20.0	3.7	3.7	3.7	3.7	3.7	3.6
	-18.8	-19.0	3.8	3.7	3.7	3.7	3.7	3.7
	-16.7	-17.0	3.9	3.9	3.9	3.9	3.9	3.9
	-14.7	-15.0	4.1	4.1	4.1	4.1	4.1	4.1
	-12.6	-13.0	4.3	4.3	4.3	4.3	4.3	4.3
	-10.5	-11.0	4.5	4.5	4.5	4.5	4.5	4.4
	-9.5	-10.0	4.6	4.6	4.6	4.6	4.6	4.4
	-8.5	-9.1	4.7	4.7	4.7	4.7	4.7	4.4
	-7.0	-7.6	4.8	4.8	4.8	4.8	4.7	4.4
	-5.0	-5.6	5.0	5.0	5.0	4.8	4.7	4.4
	-3.0	-3.7	5.3	5.1	5.0	4.8	4.7	4.4
	0.0	-0.7	5.3	5.2	5.0	4.8	4.7	4.4
	3.0	2.2	5.5	5.3	5.0	4.8	4.7	4.4
	5.0	4.1	5.6	5.3	5.0	4.8	4.7	4.4
	7.0	6.0	5.6	5.3	5.0	4.8	4.7	4.4
	9.0	7.9	5.6	5.3	5.0	4.8	4.7	4.4
	11.0	9.8	5.6	5.3	5.0	4.8	4.7	4.4
	13.0	11.8	5.6	5.3	5.0	4.8	4.7	4.4
	15.0	13.7	5.6	5.3	5.0	4.8	4.7	4.4
5.6	-24.8	-25.0	3.6	3.6	3.6	3.6	3.6	3.6
	-21.8	-22.0	4.4	4.4	4.4	4.4	4.4	4.4
	-19.8	-20.0	4.6	4.6	4.6	4.6	4.6	4.6
	-18.8	-19.0	4.8	4.7	4.7	4.7	4.7	4.7
	-16.7	-17.0	5.0	5.0	5.0	4.9	4.9	4.9
	-14.7	-15.0	5.2	5.2	5.2	5.2	5.2	5.2
	-12.6	-13.0	5.5	5.4	5.4	5.4	5.4	5.4
	-10.5	-11.0	5.7	5.7	5.7	5.7	5.7	5.5
	-9.5	-10.0	5.8	5.8	5.8	5.8	5.8	5.5
	-8.5	-9.1	5.9	5.9	5.9	5.9	5.9	5.5
	-7.0	-7.6	6.1	6.1	6.1	6.0	5.9	5.5
	-5.0	-5.6	6.3	6.3	6.3	6.1	5.9	5.5
	-3.0	-3.7	6.6	6.5	6.3	6.1	5.9	5.5
	0.0	-0.7	6.7	6.5	6.3	6.1	5.9	5.5
	3.0	2.2	6.9	6.7	6.3	6.1	5.9	5.5
	5.0	4.1	7.0	6.7	6.3	6.1	5.9	5.5
	7.0	6.0	7.1	6.7	6.3	6.1	5.9	5.5
	9.0	7.9	7.1	6.7	6.3	6.1	5.9	5.5
	11.0	9.8	7.1	6.7	6.3	6.1	5.9	5.5
	13.0	11.8	7.1	6.7	6.3	6.1	5.9	5.5
	15.0	13.7	7.1	6.7	6.3	6.1	5.9	5.5

Notes:

TC: Total Capacity(kW)

1. Capacity tables show the representative value of conditions which may occur.
2. is shown as reference. When selecting the outdoor units, avoid the outdoor air temperature range shown by .
3. In accordance with operation limits of outdoor unit, applicable range of capacity tables is different.
4. Refer to Capacity Correction Factor in the outdoor unit PDB for the actual performance data of each indoor unit and outdoor unit combination.

6. Capacity Tables

Heating capacity

Capacity Index	Outdoor air temp.		Indoor air temp. (DB, °C)					
			16	18	20	21	22	24
	DB(°C)	WB(°C)	TC	TC	TC	TC	TC	TC
			kW	kW	kW	kW	kW	kW
6.2	-24.8	-25.0	3.9	3.9	3.9	3.9	3.9	3.9
	-21.8	-22.0	4.8	4.8	4.7	4.7	4.7	4.7
	-19.8	-20.0	5.0	5.0	5.0	5.0	5.0	4.9
	-18.8	-19.0	5.1	5.1	5.1	5.1	5.1	5.1
	-16.7	-17.0	5.4	5.4	5.4	5.3	5.3	5.3
	-14.7	-15.0	5.6	5.6	5.6	5.6	5.6	5.6
	-12.6	-13.0	5.9	5.9	5.9	5.9	5.8	5.8
	-10.5	-11.0	6.1	6.1	6.1	6.1	6.1	5.9
	-9.5	-10.0	6.3	6.3	6.2	6.2	6.2	5.9
	-8.5	-9.1	6.4	6.4	6.4	6.4	6.4	5.9
	-7.0	-7.6	6.6	6.5	6.5	6.5	6.4	5.9
	-5.0	-5.6	6.8	6.8	6.8	6.6	6.4	5.9
	-3.0	-3.7	7.1	7.0	6.8	6.6	6.4	5.9
	0.0	-0.7	7.3	7.0	6.8	6.6	6.4	5.9
	3.0	2.2	7.5	7.2	6.8	6.6	6.4	5.9
	5.0	4.1	7.6	7.2	6.8	6.6	6.4	5.9
	7.0	6.0	7.7	7.2	6.8	6.6	6.4	5.9
	9.0	7.9	7.7	7.2	6.8	6.6	6.4	5.9
	11.0	9.8	7.7	7.2	6.8	6.6	6.4	5.9
	13.0	11.8	7.7	7.2	6.8	6.6	6.4	5.9
	15.0	13.7	7.7	7.2	6.8	6.6	6.4	5.9
7.1	-24.8	-25.0	4.6	4.6	4.6	4.6	4.6	4.6
	-21.8	-22.0	5.6	5.6	5.6	5.6	5.6	5.5
	-19.8	-20.0	5.9	5.9	5.9	5.9	5.9	5.8
	-18.8	-19.0	6.0	6.0	6.0	6.0	6.0	6.0
	-16.7	-17.0	6.3	6.3	6.3	6.3	6.3	6.3
	-14.7	-15.0	6.6	6.6	6.6	6.6	6.6	6.6
	-12.6	-13.0	6.9	6.9	6.9	6.9	6.9	6.9
	-10.5	-11.0	7.2	7.2	7.2	7.2	7.2	7.0
	-9.5	-10.0	7.4	7.4	7.3	7.3	7.3	7.0
	-8.5	-9.1	7.5	7.5	7.5	7.5	7.5	7.0
	-7.0	-7.6	7.7	7.7	7.7	7.7	7.5	7.0
	-5.0	-5.6	8.0	8.0	8.0	7.7	7.5	7.0
	-3.0	-3.7	8.4	8.2	8.0	7.7	7.5	7.0
	0.0	-0.7	8.6	8.3	8.0	7.7	7.5	7.0
	3.0	2.2	8.8	8.5	8.0	7.7	7.5	7.0
	5.0	4.1	8.9	8.5	8.0	7.7	7.5	7.0
	7.0	6.0	9.0	8.5	8.0	7.7	7.5	7.0
	9.0	7.9	9.0	8.5	8.0	7.7	7.5	7.0
	11.0	9.8	9.0	8.5	8.0	7.7	7.5	7.0
	13.0	11.8	9.0	8.5	8.0	7.7	7.5	7.0
	15.0	13.7	9.0	8.5	8.0	7.7	7.5	7.0
8.2	-24.8	-25.0	5.3	5.3	5.3	5.3	5.3	5.3
	-21.8	-22.0	6.4	6.4	6.4	6.4	6.4	6.4
	-19.8	-20.0	6.8	6.8	6.7	6.7	6.7	6.7
	-18.8	-19.0	6.9	6.9	6.9	6.9	6.9	6.9
	-16.7	-17.0	7.2	6.9	7.2	7.2	7.2	7.2
	-14.7	-15.0	7.6	6.9	7.6	7.6	7.6	7.5
	-12.6	-13.0	8.0	6.9	7.9	7.9	7.9	7.9
	-10.5	-11.0	8.3	6.9	8.3	8.3	8.3	8.0
	-9.5	-10.0	8.5	6.9	8.4	8.4	8.4	8.0
	-8.5	-9.1	8.6	6.9	8.6	8.6	8.6	8.0
	-7.0	-7.6	8.9	6.9	8.9	8.8	8.6	8.0
	-5.0	-5.6	9.2	6.9	9.2	8.9	8.6	8.0
	-3.0	-3.7	9.7	6.9	9.2	8.9	8.6	8.0
	0.0	-0.7	9.8	6.9	9.2	8.9	8.6	8.0
	3.0	2.2	10.1	6.9	9.2	8.9	8.6	8.0
	5.0	4.1	10.3	6.9	9.2	8.9	8.6	8.0
	7.0	6.0	10.4	6.9	9.2	8.9	8.6	8.0
	9.0	7.9	10.4	6.9	9.2	8.9	8.6	8.0
	11.0	9.8	10.4	6.9	9.2	8.9	8.6	8.0
	13.0	11.8	10.4	6.9	9.2	8.9	8.6	8.0
	15.0	13.7	10.4	6.9	9.2	8.9	8.6	8.0

Notes:
TC: Total Capacity(kW)
1. Capacity tables show the representative value of conditions which may occur.
2. is shown as reference. When selecting the outdoor units, avoid the outdoor air temperature range shown by .
3. In accordance with operation limits of outdoor unit, applicable range of capacity tables is different.
4. Refer to Capacity Correction Factor in the outdoor unit PDB for the actual performance data of each indoor unit and outdoor unit combination.

6. Capacity Tables

Heating capacity

Capacity Index	Outdoor air temp.		Indoor air temp. (DB, °C)					
			16	18	20	21	22	24
	DB(°C)	WB(°C)	TC	TC	TC	TC	TC	TC
			kW	kW	kW	kW	kW	kW
9.0	-24.8	-25.0	5.8	5.8	5.8	5.8	5.8	5.7
	-21.8	-22.0	7.0	7.0	7.0	7.0	7.0	6.9
	-19.8	-20.0	7.4	7.4	7.3	7.3	7.3	7.3
	-18.8	-19.0	7.5	7.5	7.5	7.5	7.5	7.5
	-16.7	-17.0	7.9	7.9	7.9	7.8	7.8	7.8
	-14.7	-15.0	8.3	8.3	8.2	8.2	8.2	8.2
	-12.6	-13.0	8.7	8.6	8.6	8.6	8.6	8.6
	-10.5	-11.0	9.0	9.0	9.0	9.0	9.0	8.7
	-9.5	-10.0	9.2	9.2	9.2	9.2	9.2	8.7
	-8.5	-9.1	9.4	9.4	9.3	9.3	9.3	8.7
	-7.0	-7.6	9.7	9.6	9.6	9.6	9.4	8.7
	-5.0	-5.6	10.0	10.0	10.0	9.7	9.4	8.7
	-3.0	-3.7	10.5	10.3	10.0	9.7	9.4	8.7
	0.0	-0.7	10.7	10.3	10.0	9.7	9.4	8.7
	3.0	2.2	11.0	10.6	10.0	9.7	9.4	8.7
	5.0	4.1	11.2	10.6	10.0	9.7	9.4	8.7
	7.0	6.0	11.3	10.6	10.0	9.7	9.4	8.7
	9.0	7.9	11.3	10.6	10.0	9.7	9.4	8.7
	11.0	9.8	11.3	10.6	10.0	9.7	9.4	8.7
	13.0	11.8	11.3	10.6	10.0	9.7	9.4	8.7
	15.0	13.7	11.3	10.6	10.0	9.7	9.4	8.7
10.6	-24.8	-25.0	6.9	6.9	6.8	6.8	6.8	6.8
	-21.8	-22.0	8.3	8.3	8.3	8.3	8.3	8.2
	-19.8	-20.0	8.8	8.8	8.7	8.7	8.7	8.6
	-18.8	-19.0	9.0	8.9	8.9	8.9	8.9	8.9
	-16.7	-17.0	9.4	9.4	9.4	9.3	9.3	9.3
	-14.7	-15.0	9.9	9.9	9.8	9.8	9.8	9.8
	-12.6	-13.0	10.3	10.3	10.3	10.3	10.2	10.2
	-10.5	-11.0	10.8	10.8	10.7	10.7	10.7	10.4
	-9.5	-10.0	11.0	11.0	10.9	10.9	10.9	10.4
	-8.5	-9.1	11.2	11.2	11.1	11.1	11.1	10.4
	-7.0	-7.6	11.5	11.5	11.5	11.4	11.1	10.4
	-5.0	-5.6	12.0	11.9	11.9	11.5	11.1	10.4
	-3.0	-3.7	12.5	12.2	11.9	11.5	11.1	10.4
	0.0	-0.7	12.7	12.3	11.9	11.5	11.1	10.4
	3.0	2.2	13.1	12.7	11.9	11.5	11.1	10.4
	5.0	4.1	13.3	12.7	11.9	11.5	11.1	10.4
	7.0	6.0	13.4	12.7	11.9	11.5	11.1	10.4
	9.0	7.9	13.4	12.7	11.9	11.5	11.1	10.4
	11.0	9.8	13.4	12.7	11.9	11.5	11.1	10.4
	13.0	11.8	13.4	12.7	11.9	11.5	11.1	10.4
	15.0	13.7	13.4	12.7	11.9	11.5	11.1	10.4
12.3	-24.8	-25.0	8.0	8.0	7.9	7.9	7.9	7.9
	-21.8	-22.0	9.7	9.7	9.6	9.6	9.6	9.5
	-19.8	-20.0	10.2	10.2	10.1	10.1	10.1	10.0
	-18.8	-19.0	10.4	10.3	10.3	10.3	10.3	10.3
	-16.7	-17.0	10.9	10.9	10.9	10.8	10.8	10.8
	-14.7	-15.0	11.4	11.4	11.4	11.4	11.4	11.3
	-12.6	-13.0	12.0	11.9	11.9	11.9	11.8	11.8
	-10.5	-11.0	12.5	12.5	12.4	12.4	12.4	12.0
	-9.5	-10.0	12.7	12.7	12.7	12.7	12.7	12.0
	-8.5	-9.1	13.0	13.0	12.9	12.9	12.9	12.0
	-7.0	-7.6	13.3	13.3	13.3	13.2	12.9	12.0
	-5.0	-5.6	13.9	13.8	13.8	13.4	12.9	12.0
	-3.0	-3.7	14.5	14.2	13.8	13.4	12.9	12.0
	0.0	-0.7	14.8	14.3	13.8	13.4	12.9	12.0
	3.0	2.2	15.2	14.7	13.8	13.4	12.9	12.0
	5.0	4.1	15.4	14.7	13.8	13.4	12.9	12.0
	7.0	6.0	15.6	14.7	13.8	13.4	12.9	12.0
	9.0	7.9	15.6	14.7	13.8	13.4	12.9	12.0
	11.0	9.8	15.6	14.7	13.8	13.4	12.9	12.0
	13.0	11.8	15.6	14.7	13.8	13.4	12.9	12.0
	15.0	13.7	15.6	14.7	13.8	13.4	12.9	12.0

Notes:

TC: Total Capacity(kW)

1. Capacity tables show the representative value of conditions which may occur.
2. is shown as reference. When selecting the outdoor units, avoid the outdoor air temperature range shown by .
3. In accordance with operation limits of outdoor unit, applicable range of capacity tables is different.
4. Refer to Capacity Correction Factor in the outdoor unit PDB for the actual performance data of each indoor unit and outdoor unit combination.

6. Capacity Tables

Heating capacity

Capacity Index	Outdoor air temp.		Indoor air temp. (DB, °C)					
			16	18	20	21	22	24
	DB(°C)	WB(°C)	TC	TC	TC	TC	TC	TC
			kW	kW	kW	kW	kW	kW
14.1	-24.8	-25.0	9.2	9.2	9.1	9.1	9.1	9.1
	-21.8	-22.0	11.1	11.1	11.1	11.1	11.1	11.0
	-19.8	-20.0	11.7	11.7	11.6	11.6	11.6	11.6
	-18.8	-19.0	12.0	11.9	11.9	11.9	11.9	11.9
	-16.7	-17.0	12.5	12.5	12.5	12.4	12.4	12.4
	-14.7	-15.0	13.2	13.2	13.1	13.1	13.1	13.0
	-12.6	-13.0	13.8	13.7	13.7	13.7	13.6	13.6
	-10.5	-11.0	14.4	14.4	14.3	14.3	14.3	13.9
	-9.5	-10.0	14.7	14.7	14.6	14.6	14.6	13.9
	-8.5	-9.1	14.9	14.9	14.9	14.9	14.9	13.9
	-7.0	-7.6	15.4	15.3	15.3	15.2	14.9	13.9
	-5.0	-5.6	16.0	15.9	15.9	15.4	14.9	13.9
	-3.0	-3.7	16.7	16.3	15.9	15.4	14.9	13.9
	0.0	-0.7	17.0	16.5	15.9	15.4	14.9	13.9
	3.0	2.2	17.5	16.9	15.9	15.4	14.9	13.9
	5.0	4.1	17.7	16.9	15.9	15.4	14.9	13.9
	7.0	6.0	17.9	16.9	15.9	15.4	14.9	13.9
	9.0	7.9	17.9	16.9	15.9	15.4	14.9	13.9
	11.0	9.8	17.9	16.9	15.9	15.4	14.9	13.9
	13.0	11.8	17.9	16.9	15.9	15.4	14.9	13.9
	15.0	13.7	17.9	16.9	15.9	15.4	14.9	13.9
15.8	-24.8	-25.0	10.4	10.4	10.4	10.4	10.4	10.3
	-21.8	-22.0	12.6	12.6	12.5	12.5	12.5	12.4
	-19.8	-20.0	13.2	13.2	13.2	13.2	13.2	13.1
	-18.8	-19.0	13.6	13.5	13.5	13.5	13.4	13.4
	-16.7	-17.0	14.2	14.2	14.2	14.1	14.1	14.1
	-14.7	-15.0	14.9	14.9	14.8	14.8	14.8	14.8
	-12.6	-13.0	15.6	15.5	15.5	15.5	15.4	15.4
	-10.5	-11.0	16.3	16.3	16.2	16.2	16.2	15.7
	-9.5	-10.0	16.6	16.6	16.5	16.5	16.5	15.7
	-8.5	-9.1	16.9	16.9	16.8	16.8	16.8	15.7
	-7.0	-7.6	17.4	17.3	17.3	17.3	16.8	15.7
	-5.0	-5.6	18.1	18.0	18.0	17.4	16.8	15.7
	-3.0	-3.7	18.9	18.5	18.0	17.4	16.8	15.7
	0.0	-0.7	19.3	18.6	18.0	17.4	16.8	15.7
	3.0	2.2	19.8	19.2	18.0	17.4	16.8	15.7
	5.0	4.1	20.1	19.2	18.0	17.4	16.8	15.7
	7.0	6.0	20.3	19.2	18.0	17.4	16.8	15.7
	9.0	7.9	20.3	19.2	18.0	17.4	16.8	15.7
	11.0	9.8	20.3	19.2	18.0	17.4	16.8	15.7
	13.0	11.8	20.3	19.2	18.0	17.4	16.8	15.7
	15.0	13.7	20.3	19.2	18.0	17.4	16.8	15.7

Notes:

TC: Total Capacity(kW)

1. Capacity tables show the representative value of conditions which may occur.
2. is shown as reference. When selecting the outdoor units, avoid the outdoor air temperature range shown by .
3. In accordance with operation limits of outdoor unit, applicable range of capacity tables is different.
4. Refer to Capacity Correction Factor in the outdoor unit PDB for the actual performance data of each indoor unit and outdoor unit combination.

7. Air Velocity and Temperature Distribution(Reference Data)

ARNU05GTR*4, ARNU07GTR*4, ARNU09GTR*4

Cooling

Discharge angle: 40°

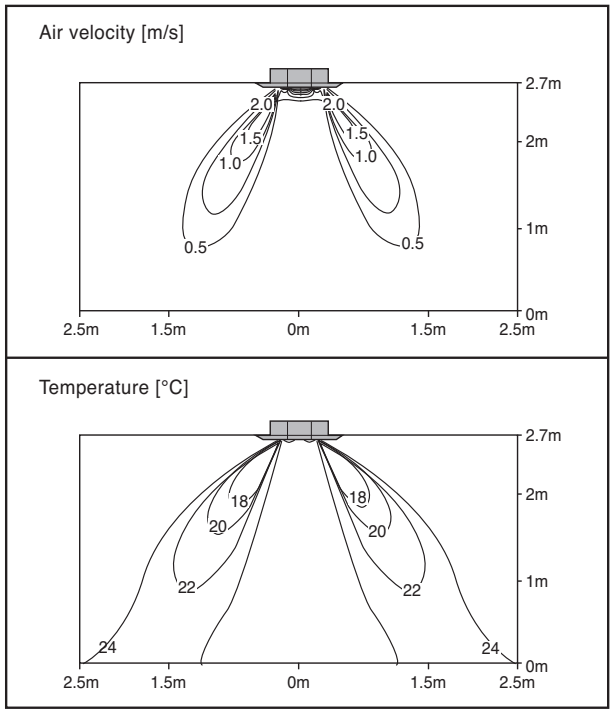

Heating

Discharge angle: 50°

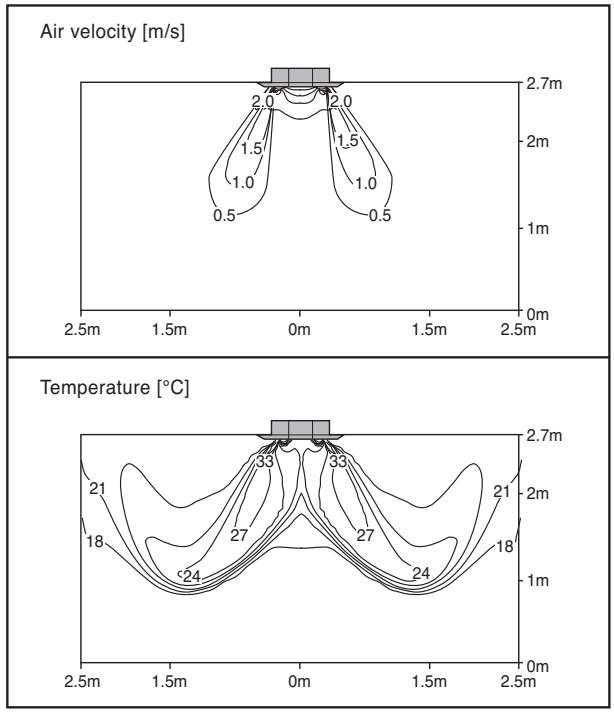

ARNU12GTR*4

Cooling

Discharge angle: 40°

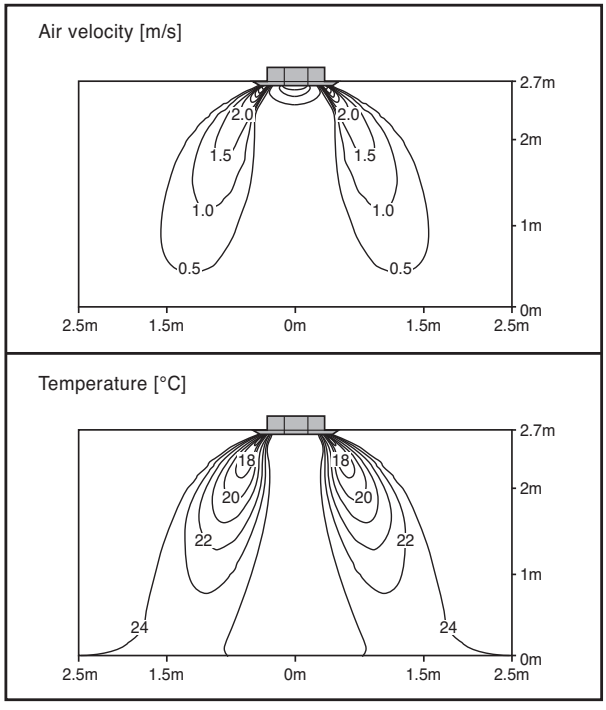

Heating

Discharge angle: 50°

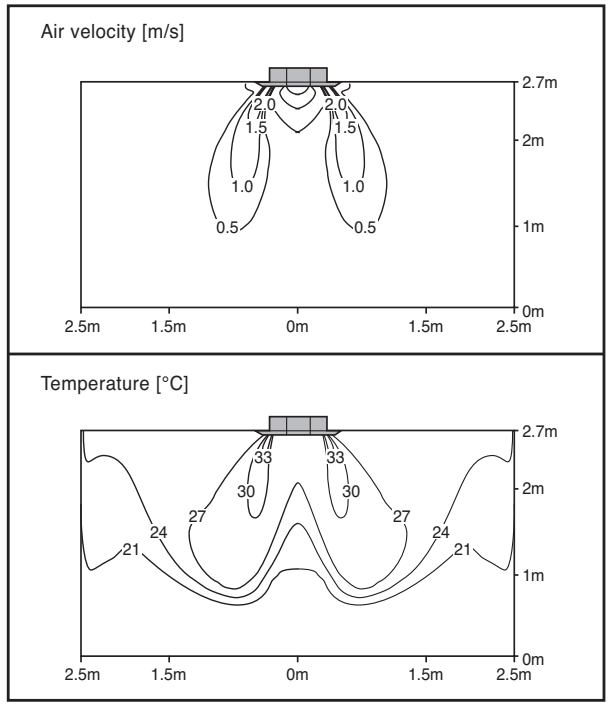

Note: Fan operating mode is high.

7. Air Velocity and Temperature Distribution(Reference Data)

ARNU15GTQ*4

Cooling

Discharge angle: 40°

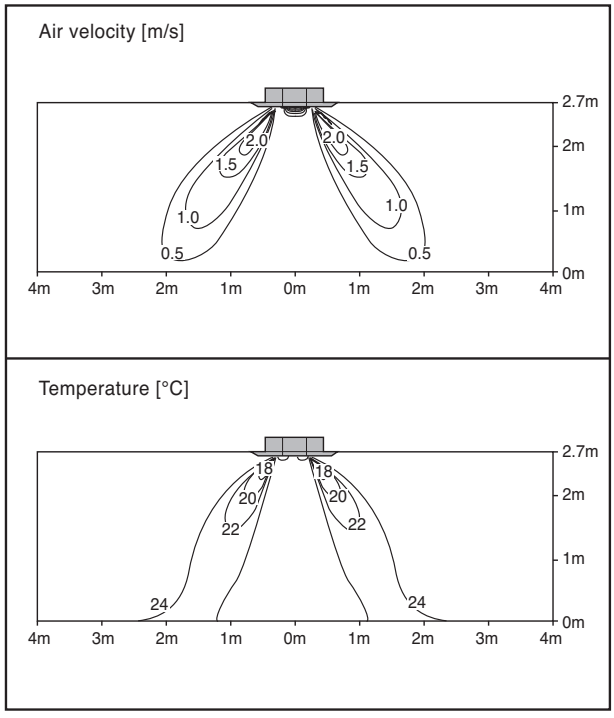

Heating

Discharge angle: 50°

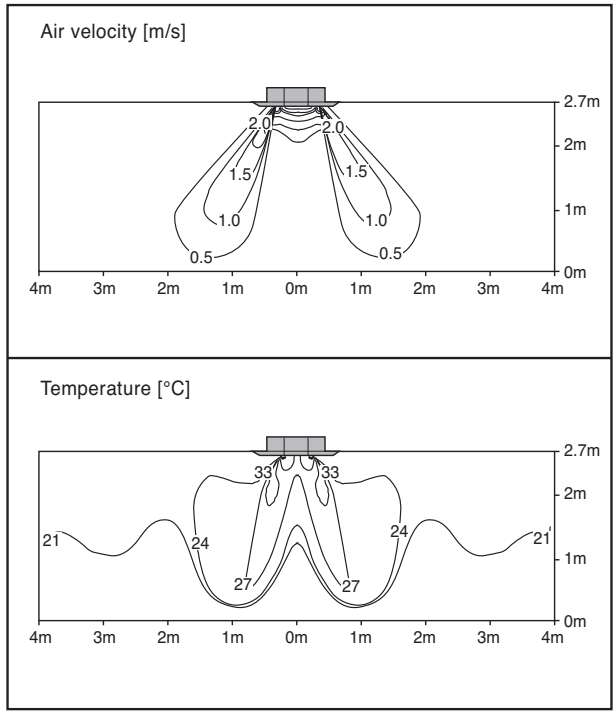

ARNU18GTQ*4

Cooling

Discharge angle: 40°

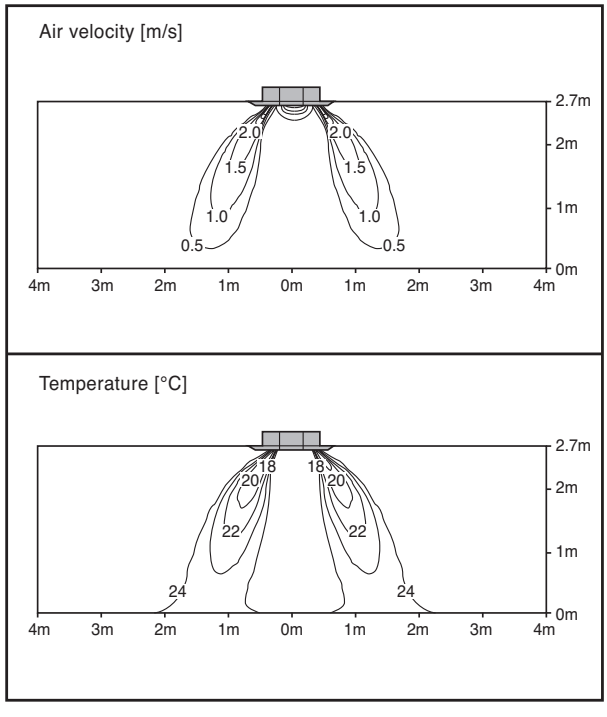

Heating

Discharge angle: 50°

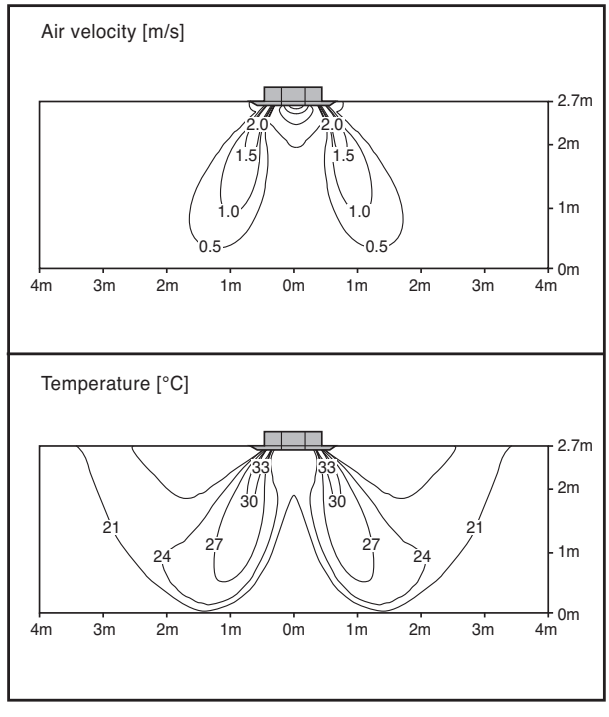

Note: Fan operating mode is high.

7. Air Velocity and Temperature Distribution(Reference Data)

ARNU21GTQ*4

Cooling

Discharge angle: 40°

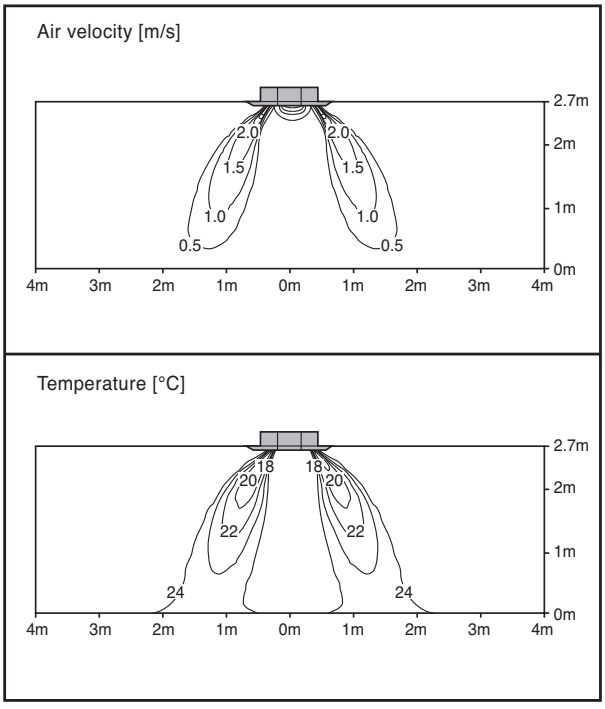

Heating

Discharge angle: 50°

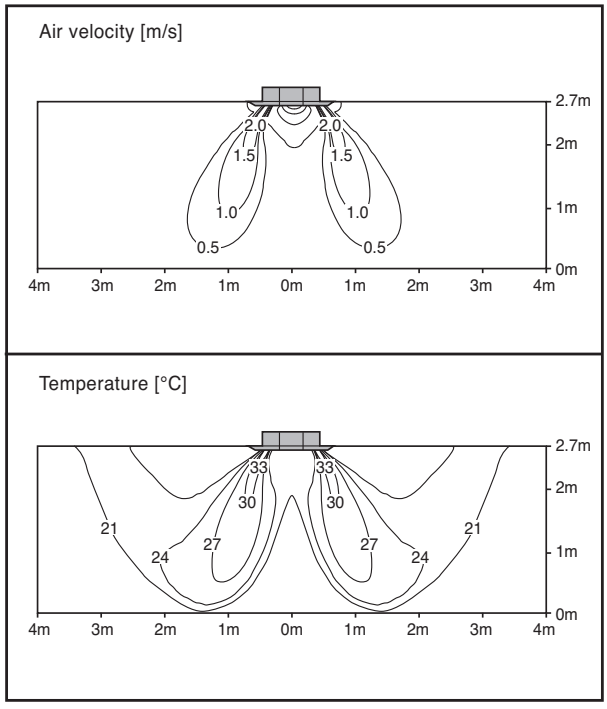

ARNU24GTP*4

Cooling

Discharge angle: 40°

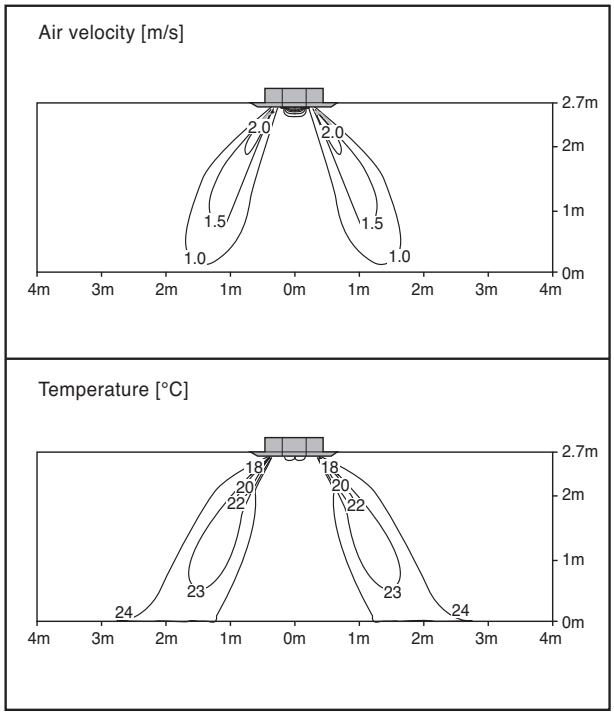

Heating

Discharge angle: 50°

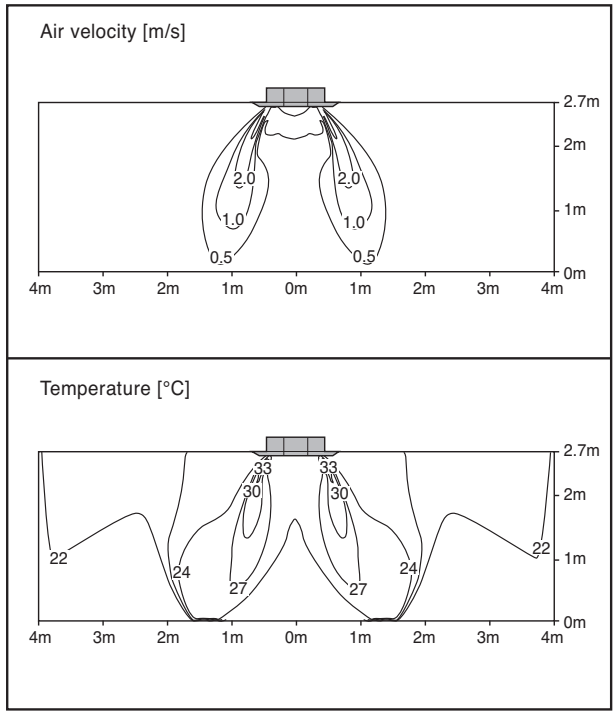

Note: Fan operating mode is high.

7. Air Velocity and Temperature Distribution(Reference Data)

ARNU28GTP*4

Cooling

Discharge angle: 40°

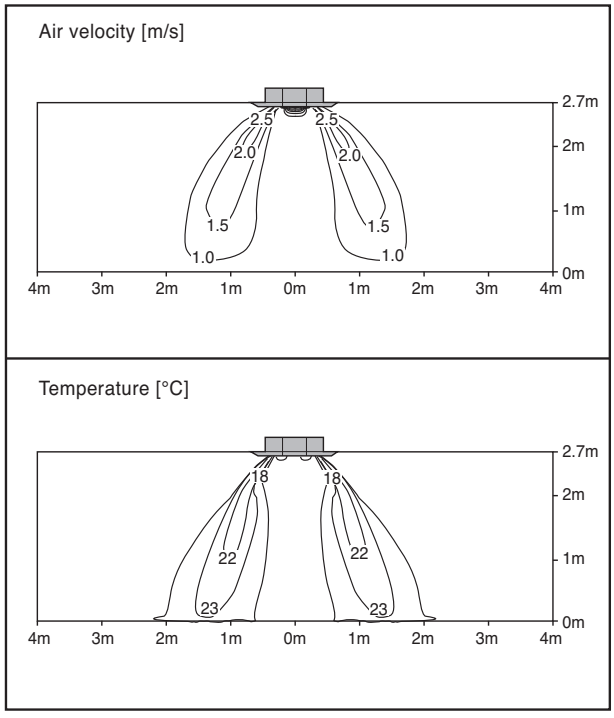

Heating

Discharge angle: 50°

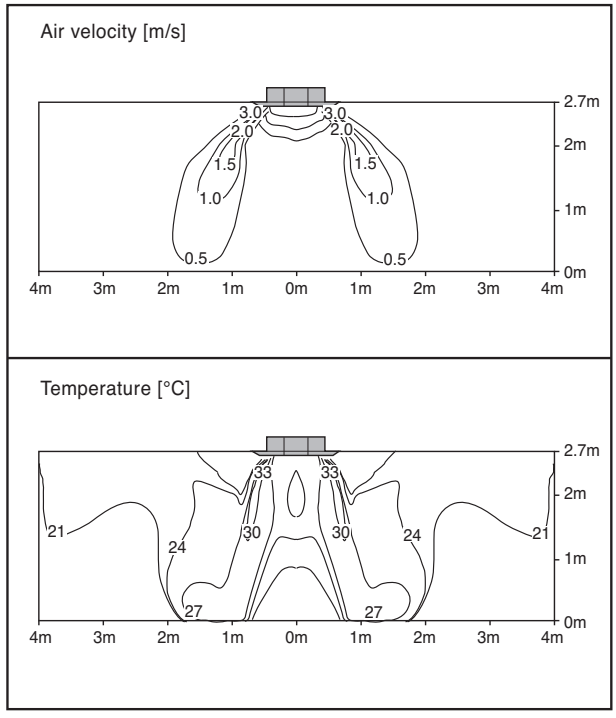

ARNU30GTP*4

Cooling

Discharge angle: 40°

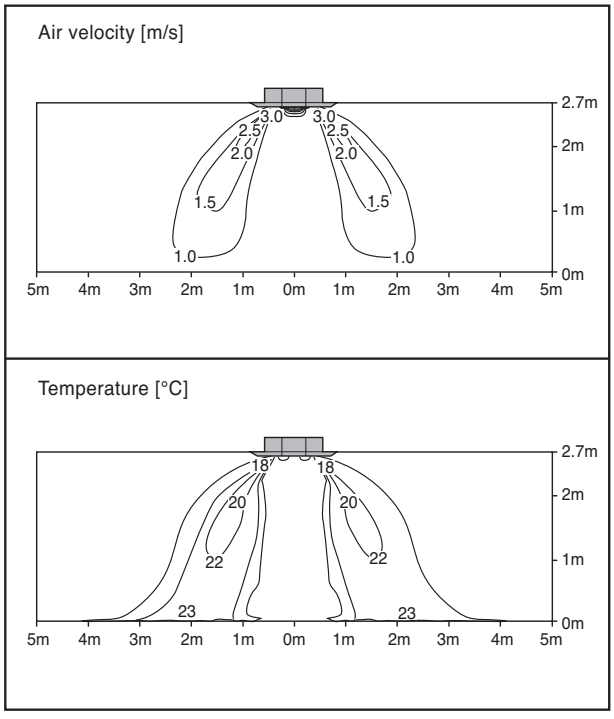

Heating

Discharge angle: 50°

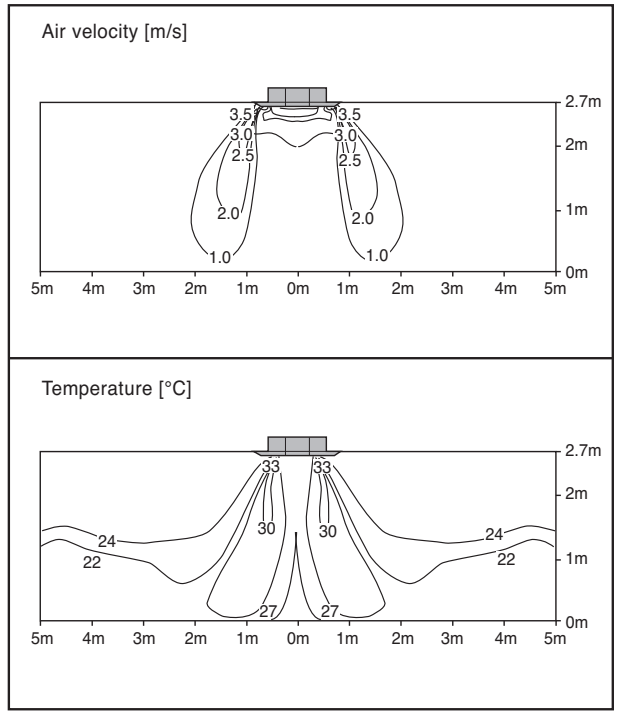

Note: Fan operating mode is high.

7. Air Velocity and Temperature Distribution(Reference Data)

ARNU36GTN*4

Cooling

Discharge angle: 40°

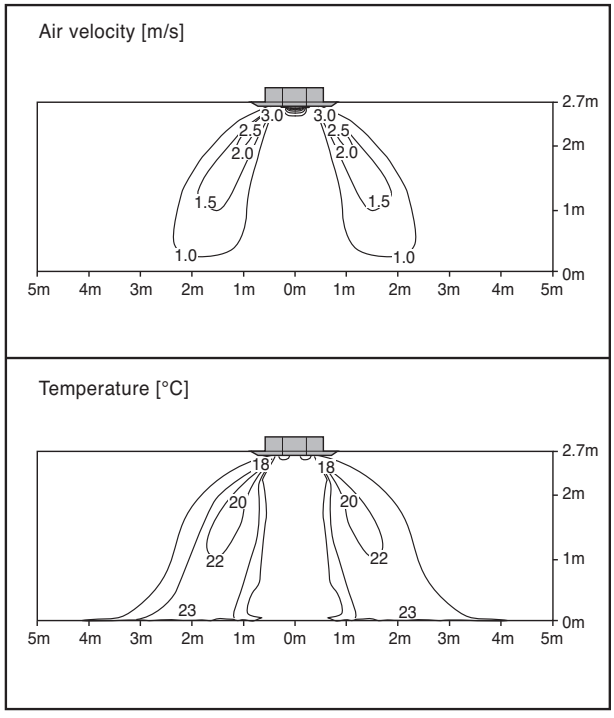

Heating

Discharge angle: 50°

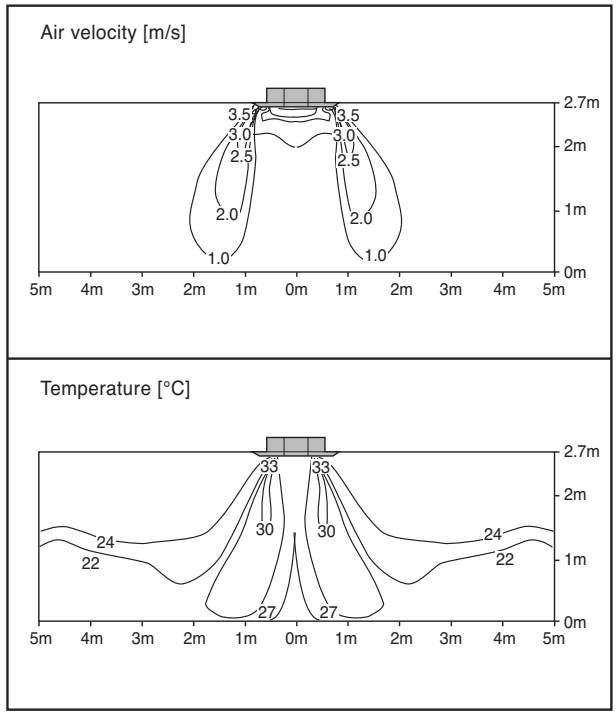

ARNU42GTM*4

Cooling

Discharge angle: 40°

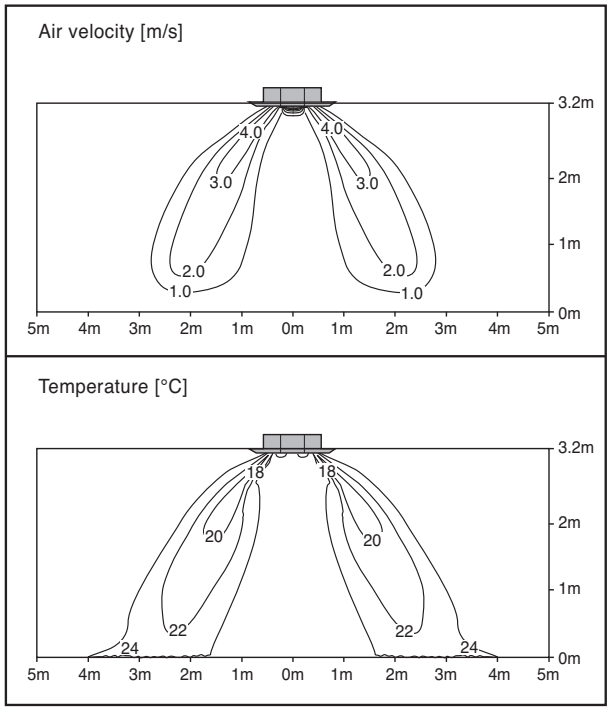

Heating

Discharge angle: 50°

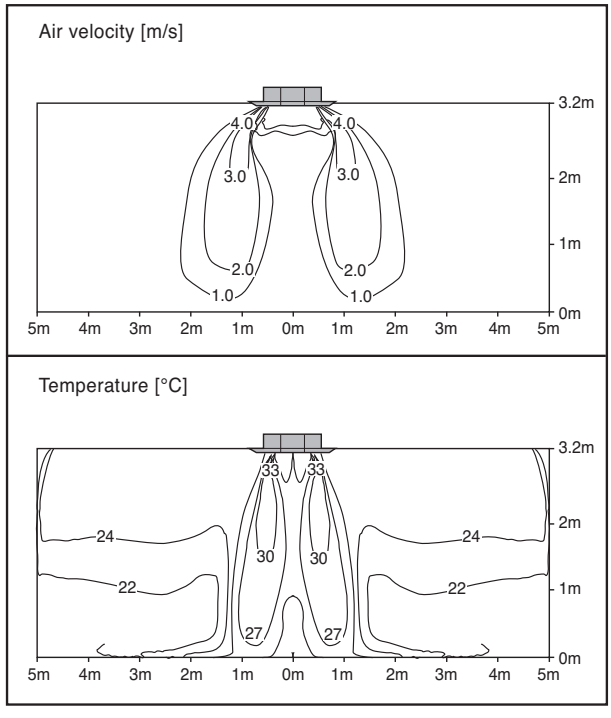

Note: Fan operating mode is high.

7. Air Velocity and Temperature Distribution(Reference Data)

ARNU48GTM*4, ARNU54GTM*4

Cooling

Discharge angle: 40°

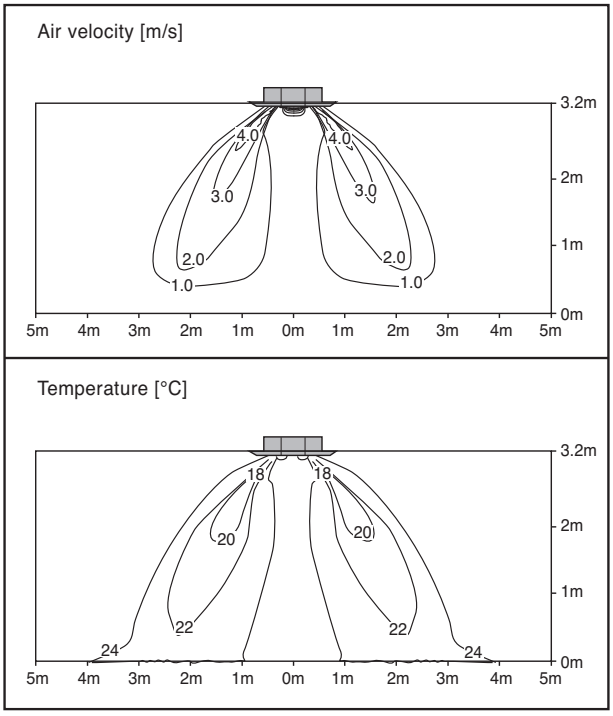

Heating

Discharge angle: 50°

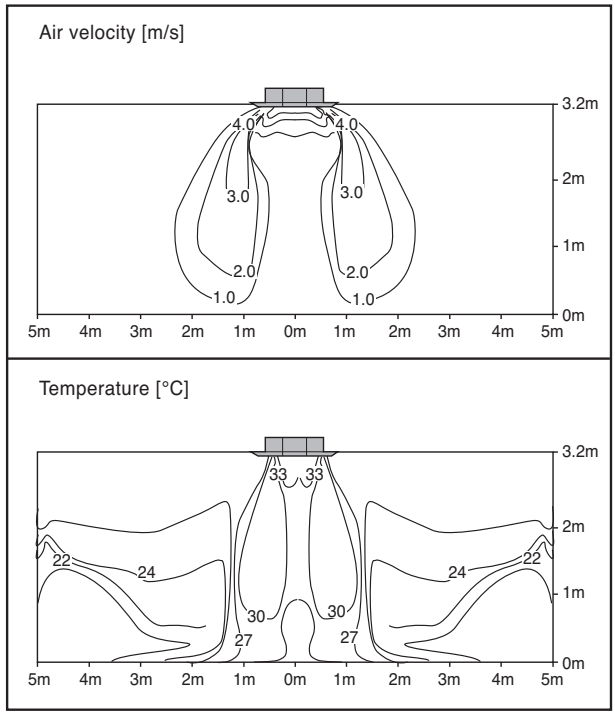

Note: Fan operating mode is high.

8. Electric Characteristicss

Units					Power Supply		IFM		Input(W)	
Model	Type	Hz	Volts	Voltage Range	MCA	MFA	kW	FLA	Cooling	Heating
ARNU05GTR*4	TR	50	220-240	Max:264 Min:198	0.25	15	0.043	0.20	30	30
ARNU07GTR*4	TR				0.25	15	0.043	0.20	30	30
ARNU09GTR*4	TR				0.25	15	0.043	0.20	30	30
ARNU12GTR*4	TR				0.25	15	0.043	0.20	30	30
ARNU15GTQ*4	TQ				0.25	15	0.043	0.20	30	30
ARNU18GTQ*4	TQ				0.25	15	0.043	0.20	30	30
ARNU21GTQ*4	TQ				0.25	15	0.043	0.20	30	30
ARNU24GTP*4	TP				0.19	15	0.030	0.15	40	40
ARNU28GTP*4	TP				0.19	15	0.030	0.15	40	40
ARNU30GTP*4	TP				0.19	15	0.030	0.15	40	40
ARNU36GTN*4	TN				0.71	15	0.135	0.56	144	144
ARNU42GTM*4	TM				1.60	15	0.135	1.30	144	144
ARNU48GTM*4	TM				1.60	15	0.135	1.30	144	144
ARNU54GTM*4	TM				1.60	15	0.135	1.30	144	144
ARNU05GTR*4	TR	60	220	Max:242 Min:198	0.25	15	0.043	0.20	30	30
ARNU07GTR*4	TR				0.25	15	0.043	0.20	30	30
ARNU09GTR*4	TR				0.25	15	0.043	0.20	30	30
ARNU12GTR*4	TR				0.25	15	0.043	0.20	30	30
ARNU15GTQ*4	TQ				0.25	15	0.043	0.20	30	30
ARNU18GTQ*4	TQ				0.25	15	0.043	0.20	30	30
ARNU21GTQ*4	TQ				0.25	15	0.043	0.20	30	30
ARNU24GTP*4	TP				0.19	15	0.030	0.15	40	40
ARNU28GTP*4	TP				0.19	15	0.030	0.15	40	40
ARNU30GTP*4	TP				0.19	15	0.030	0.15	40	40
ARNU36GTN*4	TN				0.71	15	0.135	0.56	144	144
ARNU42GTM*4	TM				1.60	15	0.135	1.30	144	144
ARNU48GTM*4	TM				1.60	15	0.135	1.30	144	144
ARNU54GTM*4	TM				1.60	15	0.135	1.30	144	144

Symbols:

MCA : Minimum Circuit Amperes (A)

MFA : Maximum Fuse Amperes(see note 5)

kW : Fan Motor Rated Output(kW)

FLA : Full Load Amperes(A)

IFM : Indoor Fan Motor

Note :

1. Voltage Range
   Units are suitable for use on electrical system where voltage supplied to unit terminals is not below or above the listed range limits.
2. Maximum allowable voltage unbalance between phase is 2%.
3. MCA/MFA
   MCA = 1.25 x FLA
   MFA ≤ 4 x FLA
   (Next lower standard fuse rating. Minimum 15A)
4. Select wire size based on the larger value on the MCA.
5. Instead of fuse, use Circuit Breaker.

9. Sound Levels

9.1 Sound Pressure Levels

Overall

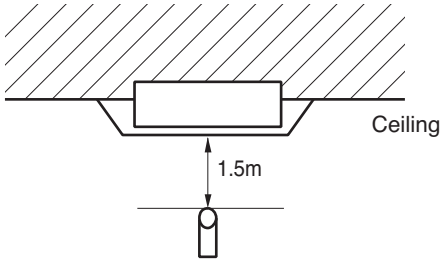

❉ Measuring place : Anechoic chamber

Notes:

1. Sound measured at 1.5m away from the center of the unit
2. Operating conditionl
   - Power source : 220-240V 50Hz / 220V 60Hz
   - Cooling : Indoor temperature (27°C DB, 19°C WB), Outdoor temperature (35°C DB, 24°C WB)
   - Heating : Indoor temperature (20°C DB, 15°C WB), Outdoor temperature (7°C DB, 6°C WB)
3. Reference accoustic pressure 0dB = 20μPa
4. Sound level will vary depending on a range of factors such as the construction(acoustic absorption coefficient) of particular room in which the equipment in installed.

Model	Sound Pressure Levels dB(A)		
	H	M	L
ARNU05GTR*4	29	27	26
ARNU07GTR*4	29	27	26
ARNU09GTR*4	30	29	27
ARNU12GTR*4	32	30	27
ARNU15GTQ*4	36	34	32
ARNU18GTQ*4	37	35	34
ARNU21GTQ*4	40	38	34

Model	Sound Pressure Levels dB(A)		
	H	M	L
ARNU24GTP*4	36	34	31
ARNU28GTP*4	39	35	33
ARNU30GTP*4	40	36	33
ARNU36GTN*4	43	40	37
ARNU42GTM*4	44	41	38
ARNU48GTM*4	46	43	41
ARNU54GTM*4	50	48	44

ARNU05GTR*4

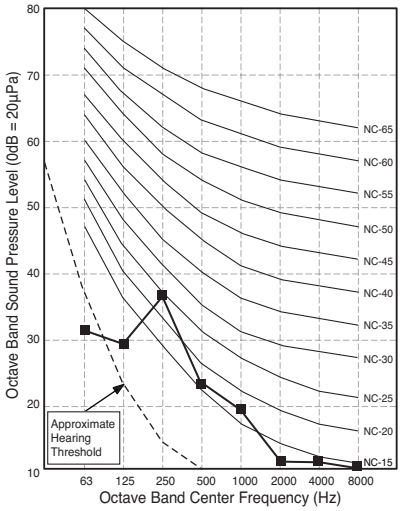

ARNU07GTR*4

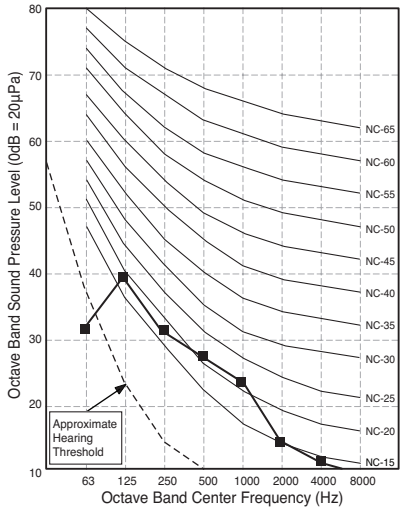

ARNU09GTR*4

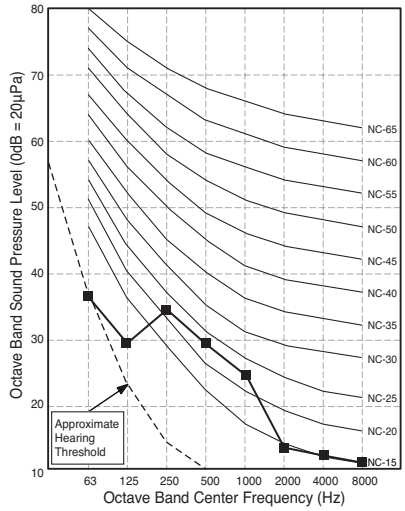

9. Sound Levels

ARNU12GTR*4

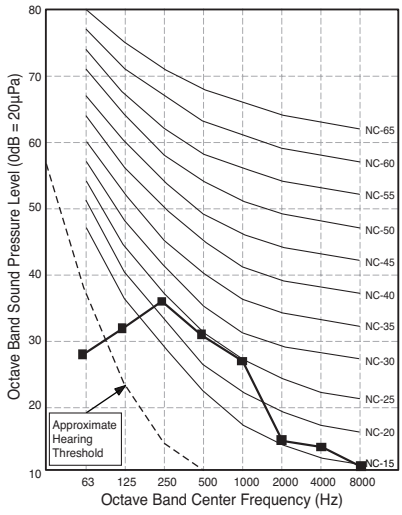

ARNU15GTQ*4

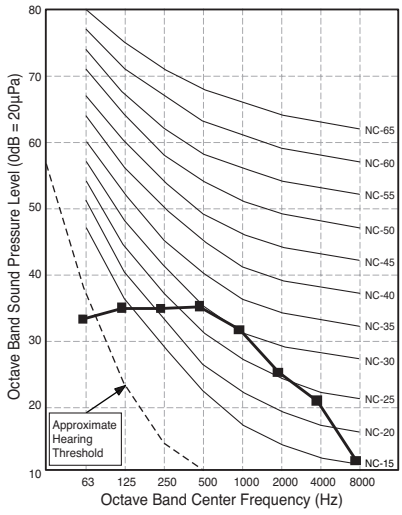

ARNU18GTQ*4

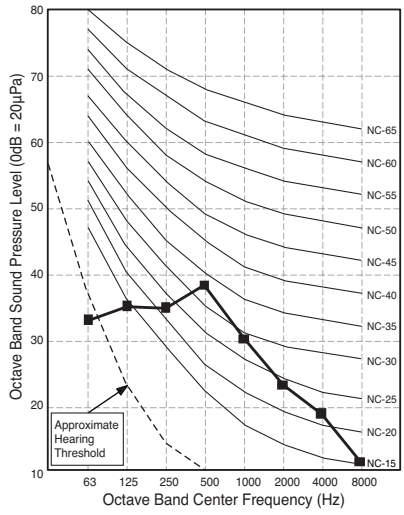

ARNU21GTQ*4

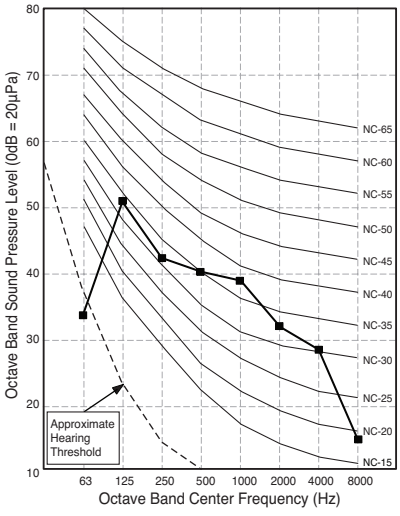

ARNU24GTP*4

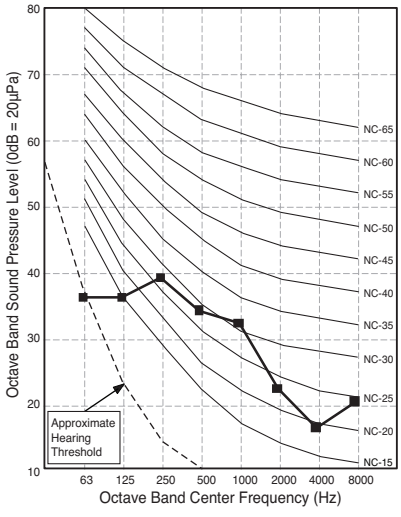

ARNU28GTP*4

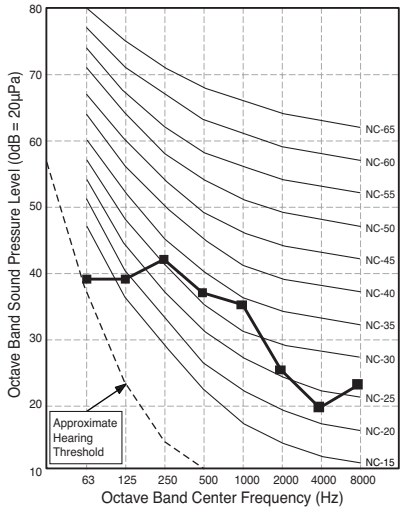

ARNU30GTP*4

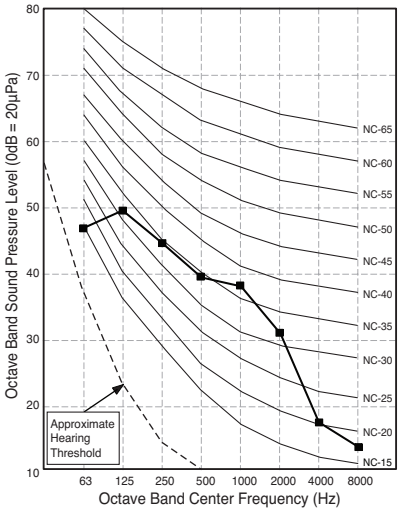

ARNU36GTN*4

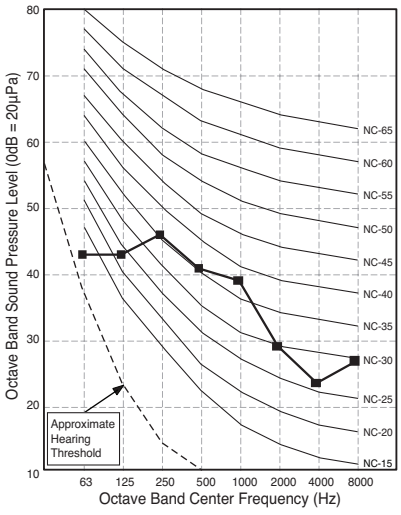

ARNU42GTM*4

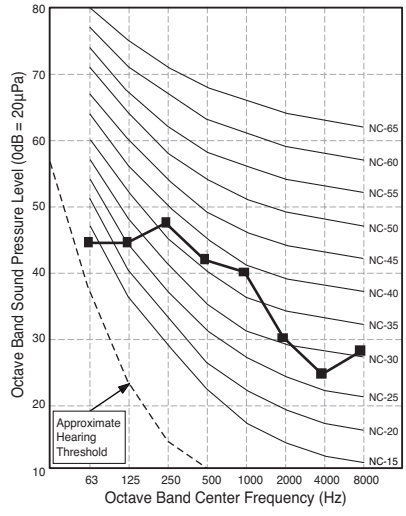

9. Sound Levels

ARNU48GTM*4

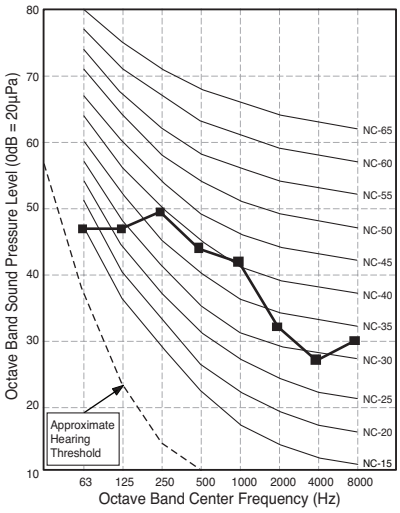

ARNU54GTM*4

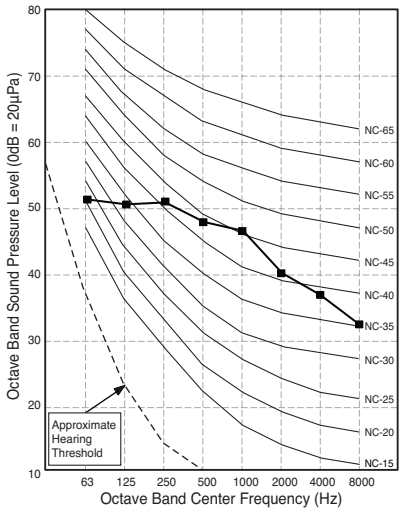

9. Sound Levels

9.2 Sound Power Levels

Model	Sound Power Levels dB(A)
	High Fan Speed
ARNU05GTR*4	46.0
ARNU07GTR*4	46.0
ARNU09GTR*4	47.0
ARNU12GTR*4	48.0
ARNU15GTQ*4	51.0
ARNU18GTQ*4	52.0
ARNU21GTQ*4	57.0
ARNU24GTP*4	55.0
ARNU28GTP*4	56.0
ARNU30GTP*4	59.0
ARNU36GTN*4	62.0
ARNU42GTM*4	63.0
ARNU48GTM*4	65.0
ARNU54GTM*4	69.0

Notes:

- Data is valid at diffuse field condition
- Data is valid at nominal operating condition
- Sound level can be increased in static pressure mode or used air guide.
- Sound power level is measured on the rated condition in the reverberation rooms.
- Sound level will vary depending on a range of factors such as the construction (acoustic absorption coefficient) of particular room in which the equipment in installed.
- Reference acoustic intensity 0dB = 10E-6μW/m²

ARNU05GTR*4
ARNU07GTR*4

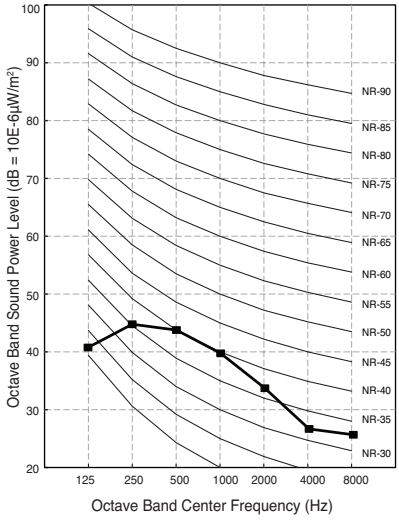

ARNU09GTR*4

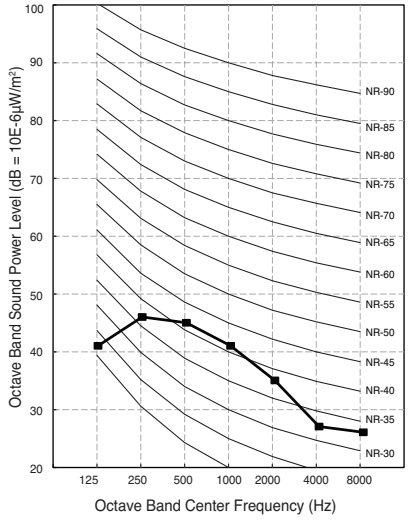

ARNU12GTR*4

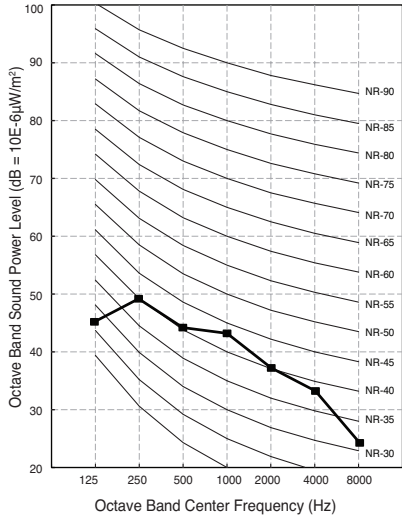

ARNU15GTQ*4

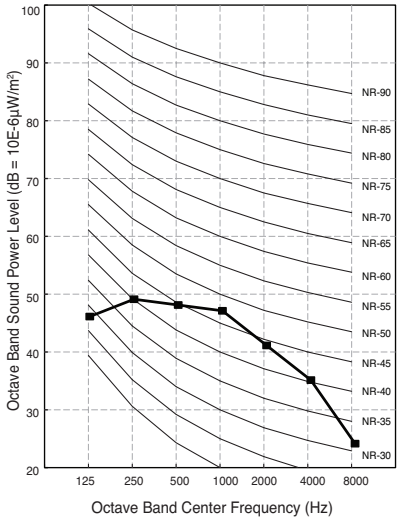

ARNU18GTQ*4

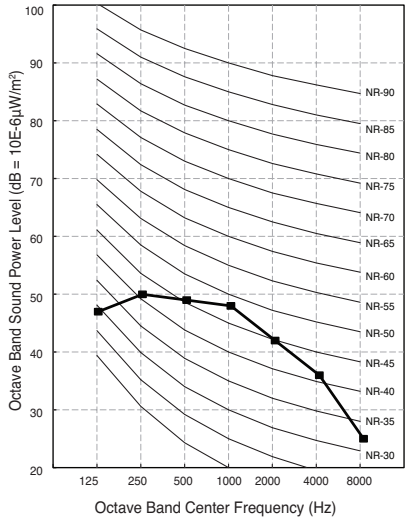

ARNU21GTQ*4

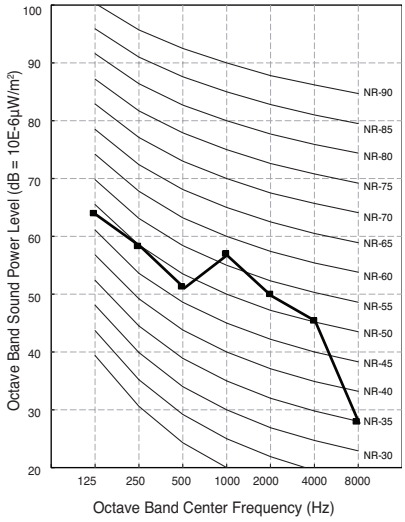

9. Sound Levels

ARNU24GTP*4

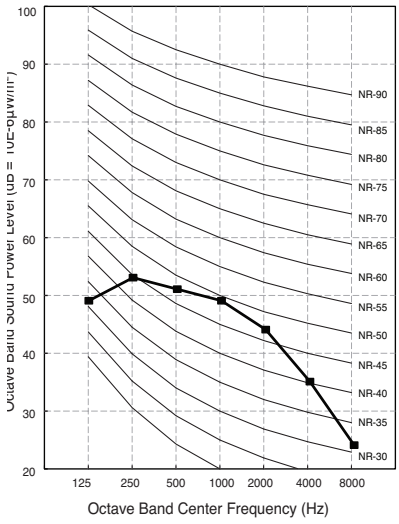

ARNU28GTP*4

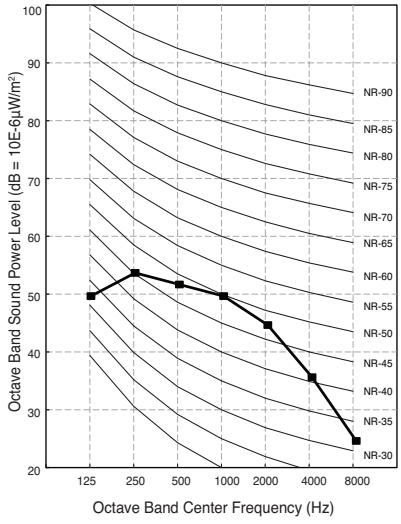

ARNU30GTP*4

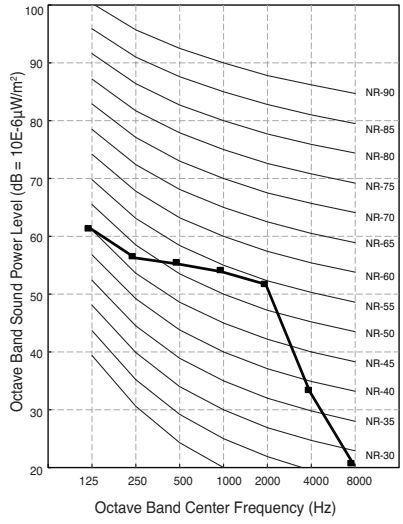

ARNU36GTN*4

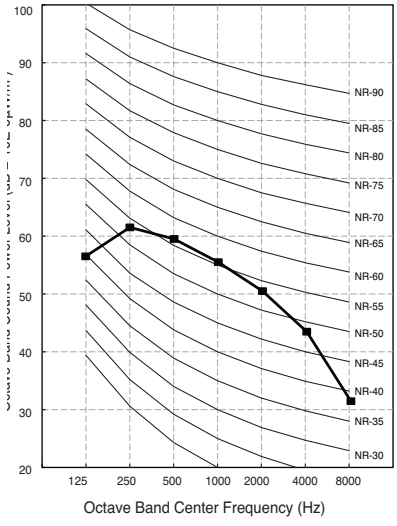

ARNU42GTM*4

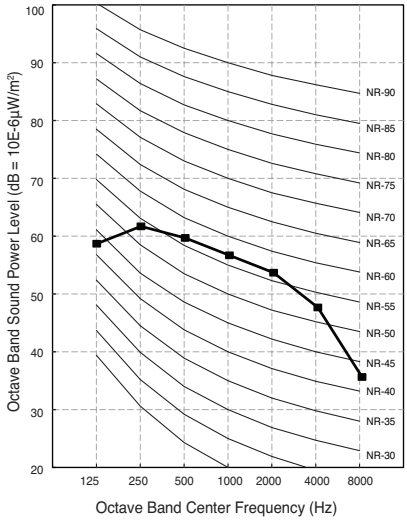

ARNU48GTM*4

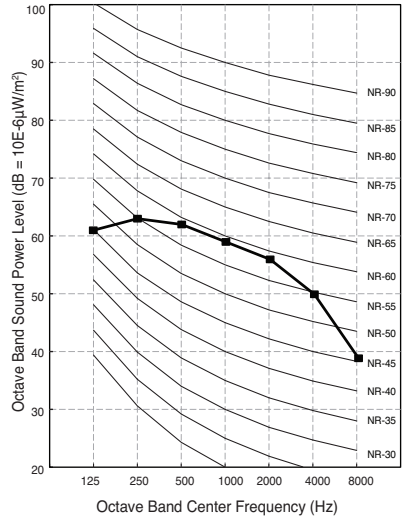

ARNU54GTM*4

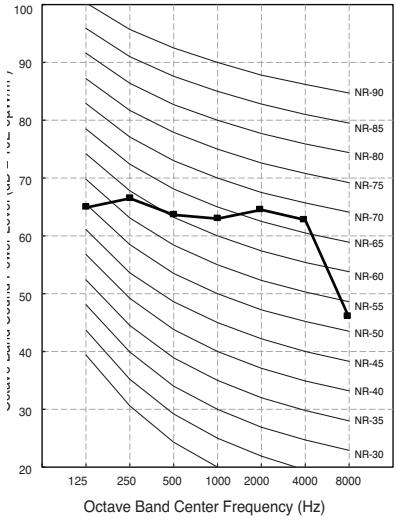

10. Installation

- Please read this instruction sheet completely before installing the product.
- When the power cord is damaged, replacement work shall be performed by authorized personnel only.
- Installation work must be performed in accordance with the national wiring standards by authorized personnel only.

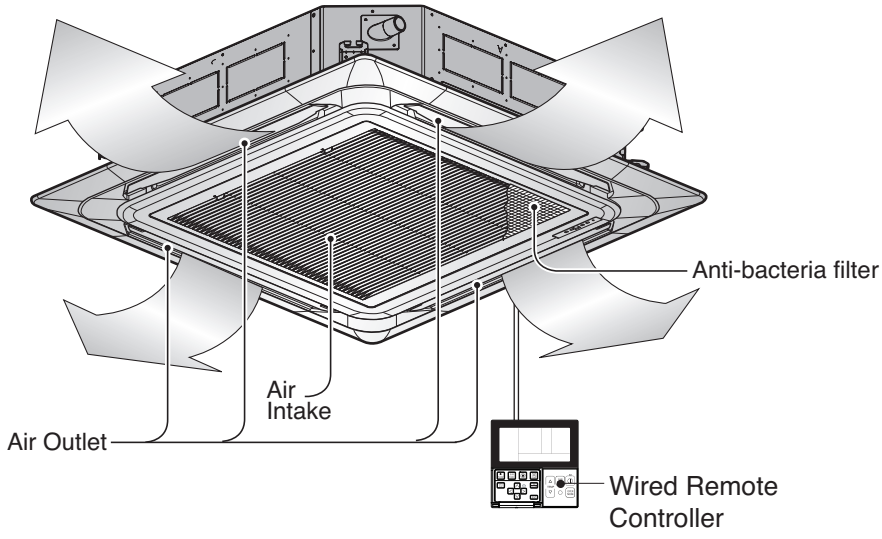

Required Parts

- Connecting cable
- Pipes: Gas side
  Liquid side
- Hanging Bolt
  (W 3/8 or M10 length 650mm)
- Insulated drain hose
- Additional Drain hose

Required Tools

- Level
- Screw driver
- Electric drill
- Hole core drill
- Flaring Tool set
- Torque Wrenches
- Hexagonal Wrench
- Gas-leak detector
- Thermometer

10.1 Selection of the best location

- If the temperature might rise above 30°C or the humidity might rise above RH 80%, attach the Dew-Protective kit or use another insulation to the indoor body.
  ❊ Dew Protective kit is sold separately.
  Use glass wool material or polyethylene foam and make sure at least 10mm thick.
- There should not be any heat source or steam near the unit.
- There should not be any obstacles to the air circulation.
- A place where air circulation in the room will be good.
- A place where drainage can be easily obtained.
- A place where noise prevention is taken into consideration.
- Do not install the unit near the door way.
- Ensure the spaces indicated by arrows from the wall, ceiling, or other obstacles.
- The indoor unit must have sufficient maintenance space.

10. Installation

■ TQ/TR Chassis

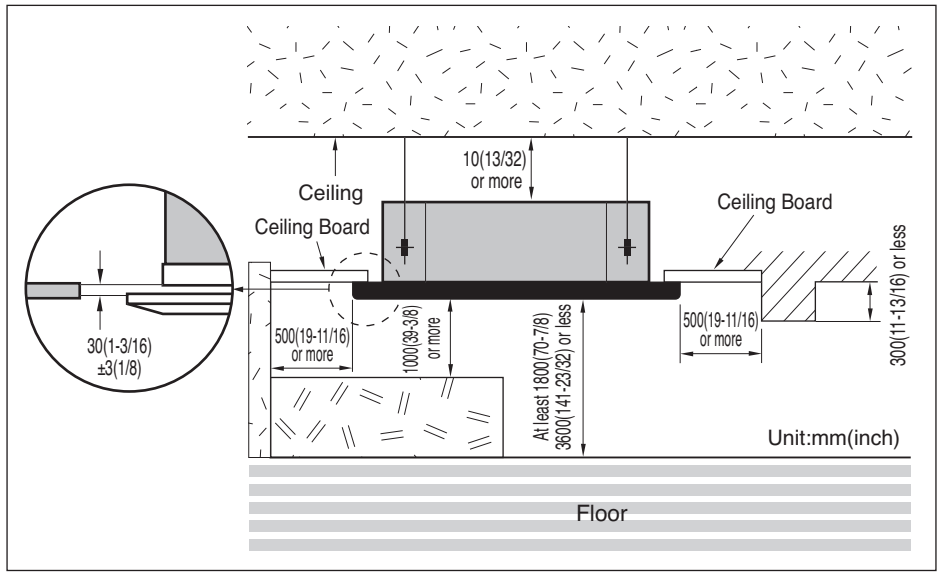

■ TP Chassis

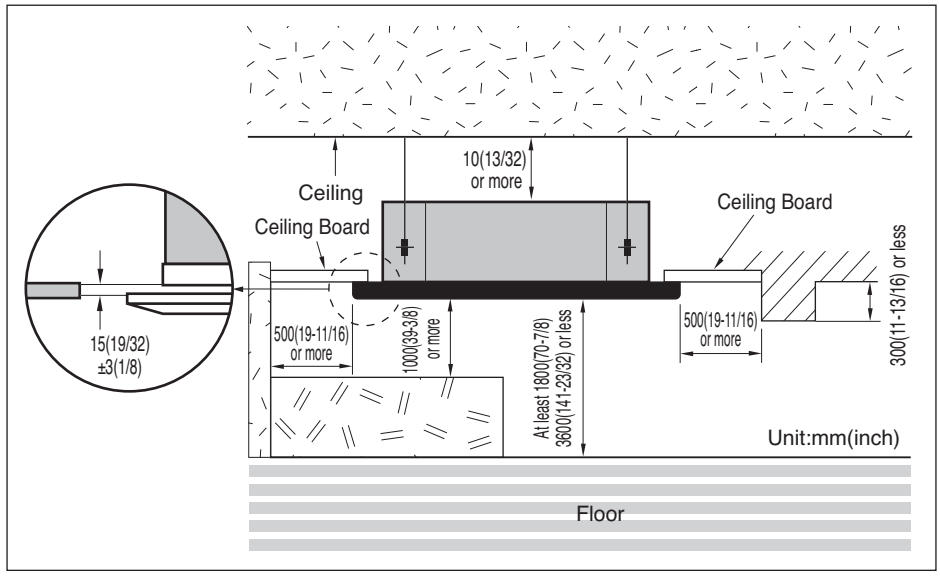

■ TM/TN Chassis

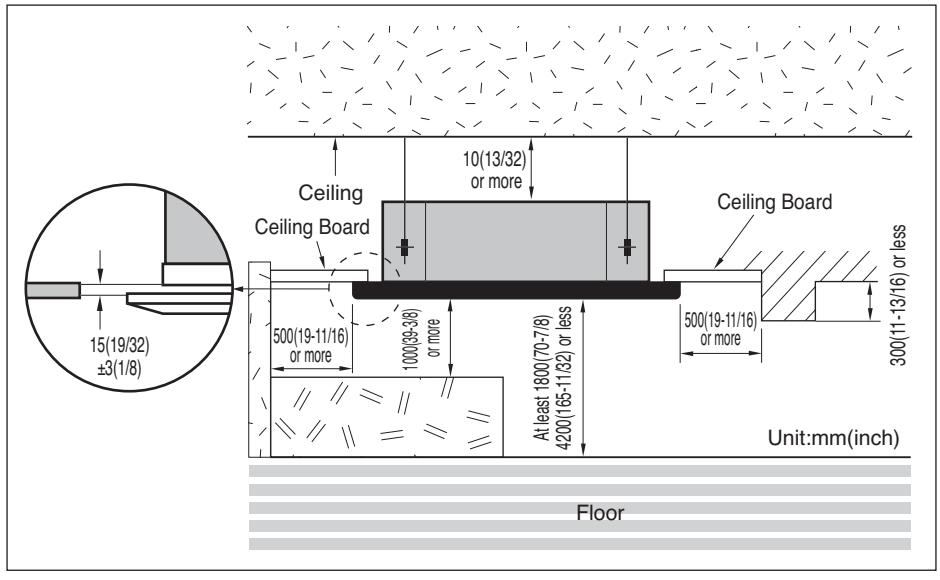

10. Installation

10.2 Ceiling opening dimensions and hanging bolt location

• The dimensions of the paper pattern for installation are the same as those of the ceiling opening dimensions.

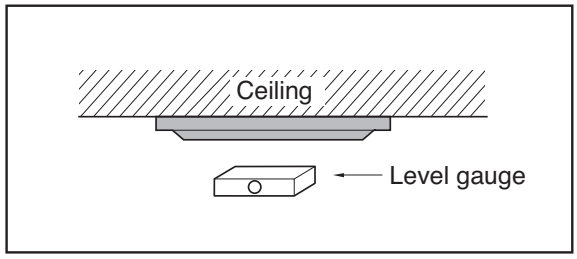

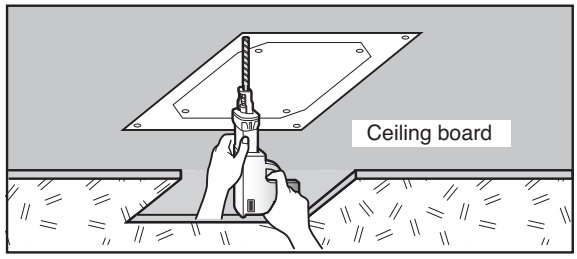

TQ/TR Chassis

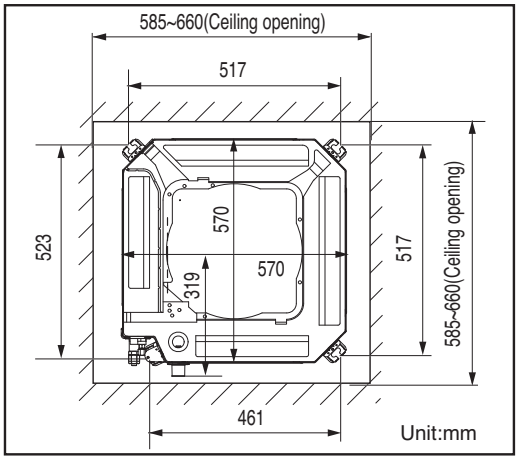

TM/TN/TP Chassis

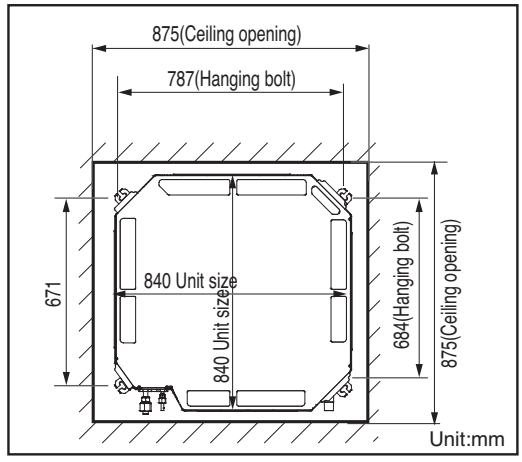

⚠ CAUTION

- This air-conditioner uses a drain pump.
- Install the unit horizontally using a level gauge.
- During the installation, care should be taken not to damage electric wires.

- Select and mark the position for fixing bolts and piping hole.
- Decide the position for fixing bolts slightly tilted to the drain direction after considering the direction of drain hose.
- Drill the hole for anchor bolt on the wall.

10. Installation

NOTE:

• Avoid the following installation location.

1. Such places as restaurants and kitchen where considerable amount of oil steam and flour is generated.
   These may cause heat exchange efficiency reduction, or water drops, drain pump mal-function.
   In these cases, take the following actions;
   • Make sure that ventilation fan is enough to cover all noxious gases from this place.
   • Ensure enough distance from the cooking room to install the air conditioner in such a place where it may not suck oily steam.

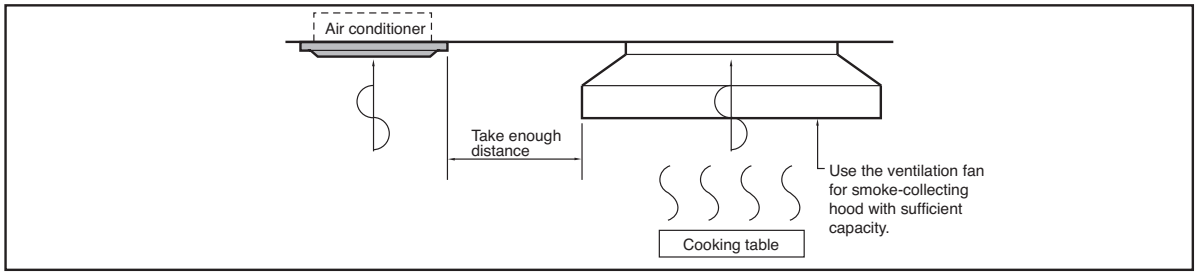

2. Avoid installng air conditioner in such places where cooking oil or iron powder is generated.
3. Avoid places where inflammable gas is generated.
4. Avoid place where noxious gas is generated.
5. Avoid places near high frequency generators.

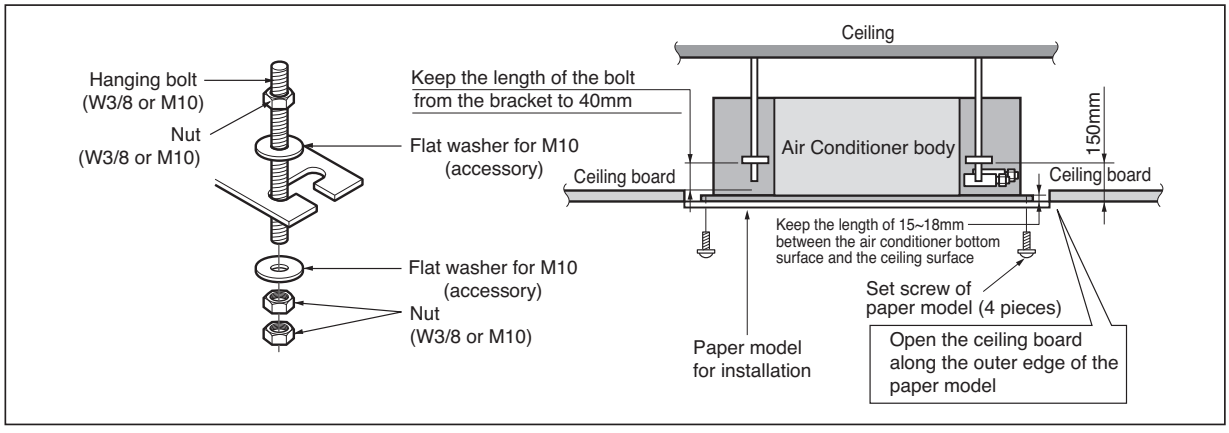

• The following parts are locally purchased.
① Hanging Bolt - W 3/8 or M10
② Nut - W 3/8 or M10
③ Spring Washer - M10
④ Plate Washer - M10

⚠ CAUTION

• Tighten the nut and bolt to prevent the unit from falling.

10.3 Wiring Connection

Connect the wires to the terminals on the control board individually according to the outdoor unit connection.

- Ensure that the color of the wires of outdoor unit and the terminal No. are the same as those of indoor unit respectively.

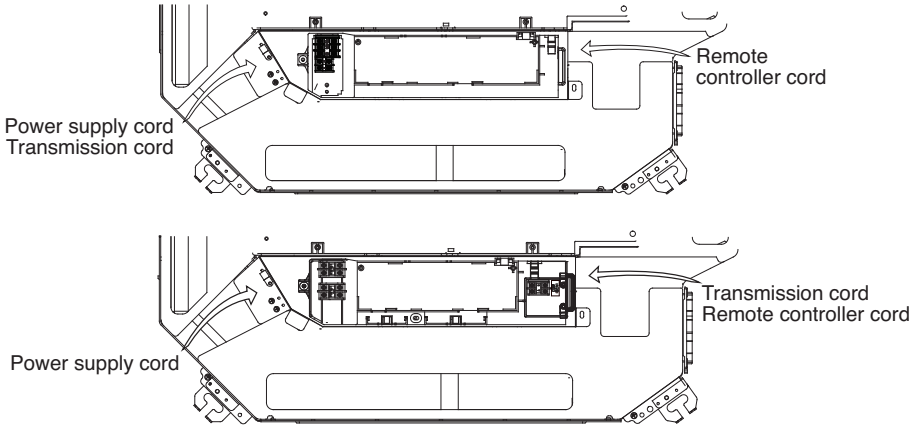

• TQ/TR Chassis

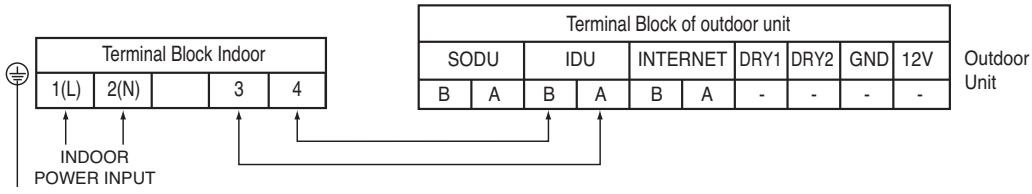

• TM/TN/TP Chassis

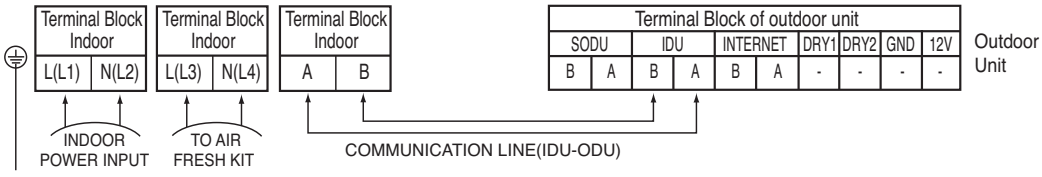

⚠ WARNING

Make sure that the screws of the terminal are not loose.

10.4 Installation of Decoration Panel

The decoration panel has its installation direction.

Before installing the decoration panel, always remove the paper template.

1. Temporarily fix two decoration panel fixing screws (hexagon M5 screw) on the unit body. (Tighten by amount 10mm in length.)
   The fixing screws (hexagon M5 screw) are included in the indoor unit box.
2. Remove the air inlet grille from the decoration panel. (Remove the hook for the air inlet grille cord.)
3. Hook the decoration panel key hole (⊂⊃) on the screws fixed in step above, and slide the panel so that the screws reach the key hole edge.
4. Retighten completely two temporarily fixed screws and other two screws. (Total 4 screws)
5. Connect the louver motor connector and display connector.
6. After tightening these screws, install the air inlet grille (including the air filter).

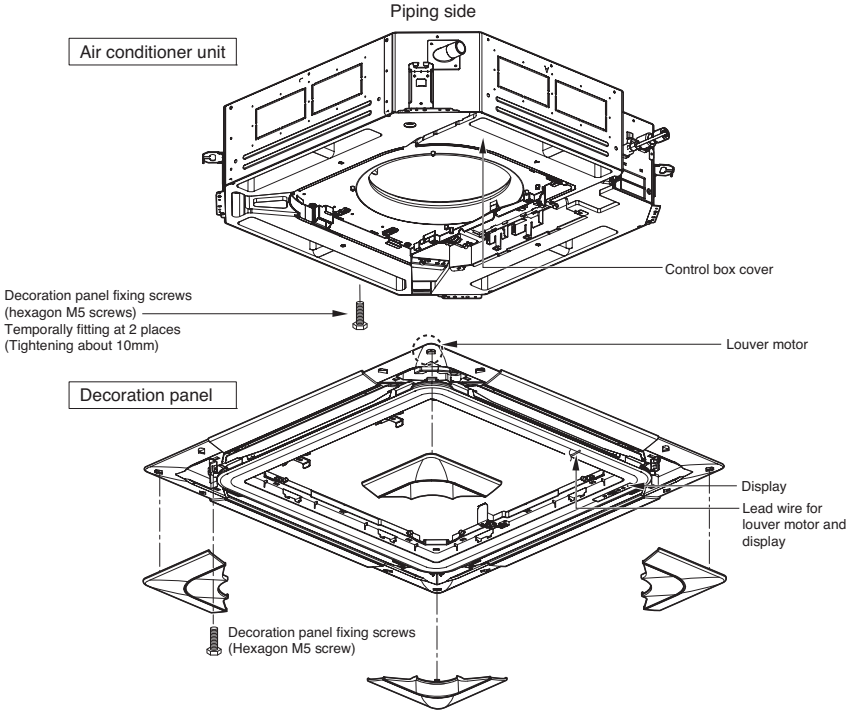

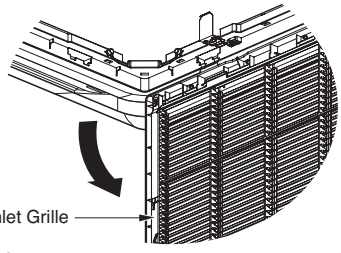

⚠ CAUTION

Install certainly the decoration panel.
Cool air leakage causes sweating.

⇨ Water drops fall.

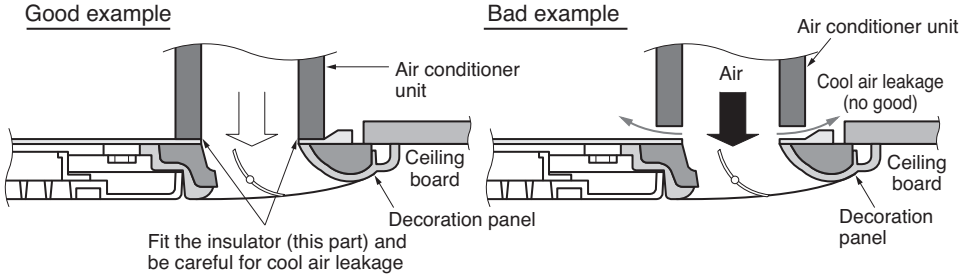

10.5 Indoor Unit Drain Piping

- Drain piping must have down-slope (1/50 to 1/100): be sure not to provide up-and-down slope to prevent reversal flow.
- During drain piping connection, be careful not to exert extra force on the drain port on the indoor unit.
- The outside diameter of the drain connection on the indoor unit is 32mm.

Piping material: Polyvinyl chloride pipe inner diometes Ø 25mm and pipe fittings

- Be sure to install heat insulation on the drain piping.

Heat insulation material: Polyethylene foam with thickness more than 8 mm.

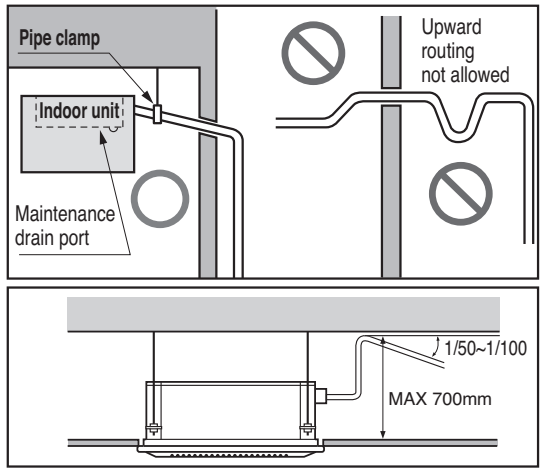

Drain test

The air conditioner uses a drain pump to drain water.
Use the following procedure to test the drain pump operation:

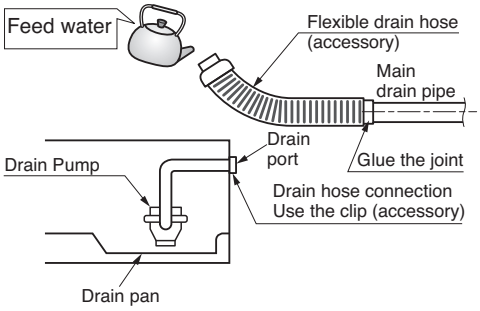

- Connect the main drain pipe to the exterior and leave it provisionally until the test comes to an end.
- Feed water to the flexible drain hose and check the piping for leakage.
- Be sure to check the drain pump for normal operating and noise when electrical wiring is complete.
- When the test is complete, connect the flexible drain hose to the drain port on the indoor unit.

⚠ CAUTION

The supplied flexible drain hose should not be strained.
A strained hose may cause leakage of water.

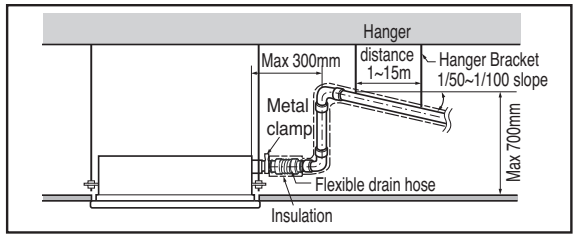

10. Installation

⚠ CAUTION

After the confirmation of the above conditions, prepare the wiring as follows:

1) Never fail to have separate power specially for the air conditioner. As for the method of wiring, follow the circuit diagram pasted on the inside of control box cover.
2) Provide a circuit breaker switch between power source and the unit.
3) The screw which fasten the wiring in the casing of electrical fittings are liable to come loose from vibrations to which the unit is subjected during the course of transportation. Check them and make sure that they are all tightly fastened. (If they are loose, it could give rise to burn-out of the wires.)
4) Confirm the specification of power source
5) Confirm that electrical capacity is sufficient.
6) Be sure that the starting voltage is maintained at more than 90 percent of the rated voltage marked on the name plate.
7) Confirm that the cable thickness is as specified in the power sources specification.
(Particularly note the relation between cable length and thickness.)
8) Do not install the leakage breaker in a place which is wet or moist.
Water or moist may cause short circuit.
9) The following troubles would be caused by voltage drop-down.
- Vibration of a magnetic switch, damage on the contact point there of, fuse breaking, disturbance to the normal function of a overload protection device.
- Proper starting power is not given to the compressor.

HAND OVER

Teach the customer the operation and maintenance procedures, using the operation manual (air filter cleaning, temperature control, etc.).

WIRED REMOTE CONTROLLER INSTALLATION

- Since the room temperature sensor is in the remote controller, the remote controller box should be installed in a place away from direct sunlight, high humidity and direct supply of cold air to maintain proper space temperature.
  Install the remote controller about 5ft(1.5m) above the floor in an area with good air circulation at an average temperature.

Do not install the remote controller where it can be affected by:

- Drafts, or dead spots behind doors and in corners.
- Hot or cold air from ducts.
- Radiant heat from sun or appliances.
- Concealed pipes and chimneys.
- Uncontrolled areas such as an outside wall behind the remote controller.
- This remote controller is equipped with a seven segment LED. display. For proper display of the remote controller LED's, the remote controller should be installed properly as shown in Fig.1. (The standard height is 1.2~1.5 m from floor level.)

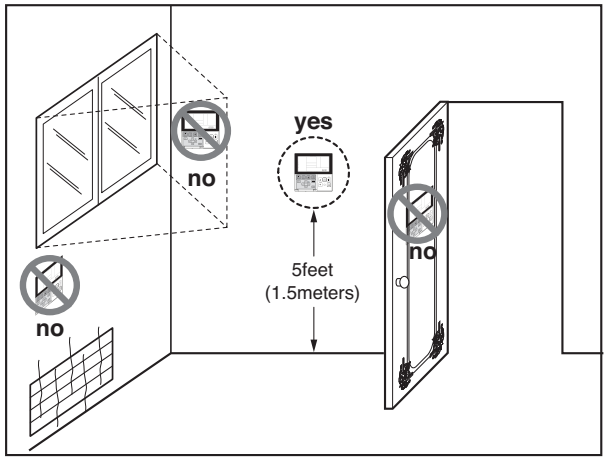

Fig.1 Typical locations for remote controller

11. Accessories

Standard Accessories

Name	Drain hose	Clamp metal	Washer for hanging backet	Clamp (Tie Wrap)	Insulation for fitting	Bolt	(Other)
Quantity	1 EA	2 EA	8 EA	4 EA	1 SET	4 EA	
Shape				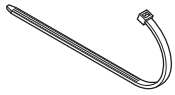	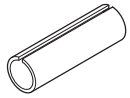 for gas pipe 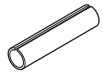 for liquid pipe	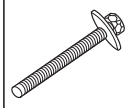	• Paper pattern for installation • Owner's manual • Installation manual

⚠ CAUTION

• Use only those accessories (Standard or optional) which have designated specifications.

MULTI V™ Indoor unit

Ceiling Cassette 4-way(2)

1. List of functions

2. Specifications

3. Dimensions

4. Piping Diagrams

5. Wiring Diagrams

6. Capacity Tables

7. Air Velocity and Temperature Distribution

8. Electric Characteristics

9. Sound Levels

10. Installation

11. Accessories

1. List of functions

Category	Function	ARNU07GTN*4, ARNU15GTN*4, ARNU18GTN*4, ARNU24GTM*4
Air flow	Air supply outlet	4
	Airflow direction control(left & right)	-
	Airflow direction control(up & down)	Auto
	Auto swing(left & right)	-
	Auto swing(up & down)	O
	Airflow steps(fan/cool/heat)	4 / 5 / 4
	Chaos swing	X
	Chaos wind(auto wind)	O
	Jet cool(Power wind)	O
	Swirl wind	O
Air purifying	Deodorizing filter	X
	Plasma air purifier	O(C4 Model only), Option(A4 Model - PTPKM0(TN/TM))
	Prefilter(washable / anti-fungus)	O
Installation	Drain pump	O
	E.S.P. control	X
	Electric heater(operation)	X
	High ceiling operation	O
Reliability	Hot start	O
	Self diagnosis	O
	Soft dry operation	O
Convenience	Auto changeover	O(Heat recovery)
	Auto cleaning	X
	Auto operation(artificial intelligence)	O(Heat pump or Cooling only)
	Auto restart operation	O
	Child lock	O
	Forced operation	O
	Group control	O
	Sleep mode	O
	Timer(on/off)	O
	Timer(weekly)	O
	Two thermistor control	O
	Elevation Grill	PTEGM0 (TM,TN only)
	External On/Off	O
Individual control	Wide wired remote controller (RS2)	PQRCVSL0/PQRCVSL0QW
	Wide wired remote controller (RS2 Plus)	PREMTB001/PREMTBB01
	Premium wired remote controller	PREMTA000/PREMTA000A/PREMTA000B
	Simple wired remote controller	PQRCVCL0Q(W)
	Wired remote controller(for hotel use)	PQRCHCA0Q(W)
	Wireless LCD remote control	PQWRH(C)Q0FDB
Special function kit	Zone control	-
	CTIE	-
	Electro thermostat	-
	Remote temperature sensor	PQRSTA0
	Group control wire	PZCWRCG3
	Dry contact	PDRYCB000/PDRYCB100/PDRYCB300/PDRYCB400/PDRYCB500

O : Applied X : Not applied – : No relation

Option : Model name & price are different according to options, and assembled in factory with main unit.

Accessory : Installed at field, ordered and purchased separately by the corresponding model name, supplied with separate package.

* Plasma kit and Elevation Grille are not applicable at the same time

2. Specifications

* Model Name
A:Basic, C:Plasma

Model		Unit	ARNU07GTN*4	ARNU15GTN*4	ARNU18GTN*4
Cooling Capacity		kW	2.2	4.5	5.6
		kcal/h	1,900	3,900	4,800
		Btu/h	7,500	15,400	19,100
Heating Capacity		kW	2.5	5.0	6.3
		kcal/h	2,200	4,300	5,400
		Btu/h	8,500	17,100	21,500
Casing			Galvanized Steel Plate	Galvanized Steel Plate	Galvanized Steel Plate
Dimensions(WxHxD)	Body	mm	840 x 246 x 840	840 x 246 x 840	840 x 246 x 840
		inch	33-1/16 x 9-11/16 x 33-1/16	33-1/16 x 9-11/16 x 33-1/16	33-1/16 x 9-11/16 x 33-1/16
	Front Panel	mm	950 x 25 x 950	950 x 25 x 950	950 x 25 x 950
		inch	37-13/32 x 31/32 x 37-13/32	37-13/32 x 31/32 x 37-13/32	37-13/32 x 31/32 x 37-13/32
Coil	Rows x Columns x FPI		2 x 10 x 19	2 x 10 x 19	2 x 10 x 19
	Face Area	m^2	0.57	0.57	0.57
Fan	Type		Turbo Fan	Turbo Fan	Turbo Fan
	Motor Output x Number	W	135	135	135
	Running Current	A	0.56	0.56	0.56
	Air Flow Rate(H / M / L)	CMM	13 / 12 / 11	15 / 13 / 12	16 / 14 / 12
		cfm	459 /424 / 388	530 /459 / 424	565 / 530 / 424
	Drive		Direct	Direct	Direct
	Motor type		BLDC	BLDC	BLDC
Temperature Control			Microprocessor, Thermostat for cooling and heating		
Sound Absorbing Thermal Insulation Material			Foamed polystrene	Foamed polystrene	Foamed polystrene
Safety Device			Fuse	Fuse	Fuse
Pipe Connections	Liquid Side	mm(inch)	Ø9.52(3/8)	Ø9.52(3/8)	Ø9.52(3/8)
	Gas Side	mm(inch)	Ø15.88(5/8)	Ø15.88(5/8)	Ø15.88(5/8)
	Drain Pipe(Internal Dia.)	mm(inch)	25(1)	25(1)	25(1)
Net Weight	Body	kg(lbs)	23.5(51.8)	23.5(51.8)	23.5(51.8)
Noise Level(Sound Press, 1.5m, H / M / L)		dB(A)	29 / 26 / 24	32 / 29 / 26	34 / 30 / 26
Power Supply		Ø, V, Hz	1, 220-240, 50	1, 220-240, 50	1, 220-240, 50
			1, 220, 60	1, 220, 60	1, 220, 60
Refrigerant Control			EEV	EEV	EEV
Transmission cable		mm^2	CVV-SB 1.0~1.5 X 2C	CVV-SB 1.0~1.5 X 2C	CVV-SB 1.0~1.5 X 2C
Panel Color			Morning fog	Morning fog	Morning fog
Panel Name(Accessory)			PT-UMC	PT-UMC	PT-UMC
Elevation Grill(Accessory)			PTEGM0	PTEGM0	PTEGM0

Notes:

1. Capacities are based on the following conditions:
   - Cooling
     - Indoor temp. 27°C[80.6°F]DB/ 19°C[66.2°F]WB
     - Outdoor temp. 35°C[95°F]DB/ 24°C[75.2°F]WB
     - Interconnecting Piping Length 7.5m
     - Level Difference of Zero
   - Heating
     - Indoor temp. 20°C[68°F]DB/ 15°C[59°F]WB
     - Outdoor temp. 7°C[44.6°F]DB/ 6°C[42.8°F]WB
     - Interconnecting Piping Length 7.5m
     - Level Difference of Zero
2. Capacities are Net Capacities
3. Due to our policy of innovation some specifications may be changed without prior notification
4. Wiring cable size must comply with the applicable local and national codes. And "Electric characteristics" chapter should be considered for electrical work and design. Especially the power cable and circuit breaker should be selected in accordance with that.
5. EEV: Electronic Expansion Valve
6. Anechoic chamber conversion value is measured at 1.5 m downward from unit centre.
   The values depends on the ambient conditions and values are normally higher in actual operation.

Conversion Formula
kcal/h= kW x 860
Btu/h = kW x 3412
cfm = m^3/min x 35.3
l/s = CMM x 1000/60

2. Specifications

* Model Name
A:Basic, C:Plasma

Model		Unit	ARNU24GTM*4
Cooling Capacity		kW	7.1
		kcal/h	6,100
		Btu/h	24,200
Heating Capacity		kW	8.0
		kcal/h	6,900
		Btu/h	27,300
Casing			Galvanized Steel Plate
Dimensions(WxHxD)	Body	mm	840 x 288 x 840
		inch	33-1/16 x 11-11/32 x 33-1/16
	Front Panel	mm	950 x 25 x 950
		inch	37-13/32 x 31/32 x 37-13/32
Coil	Rows x Columns x FPI		2 x 12 x 19
	Face Area	m^2	0.57
Fan	Type		Turbo Fan
	Motor Output x Number	W	135
	Running Current	A	1.3
	Air Flow Rate(H / M / L)	CMM	22 / 20 / 18
		cfm	777 / 706 / 635
	Drive		Direct
	Motor type		BLDC
Temperature Control			Microprocessor, Thermostat for cooling and heating
Sound Absorbing Thermal Insulation Material			Foamed polystrene
Safety Device			Fuse
Pipe Connections	Liquid Side	mm(inch)	Ø9.52(3/8)
	Gas Side	mm(inch)	Ø15.88(5/8)
	Drain Pipe(Internal Dia.)	mm(inch)	25(1)
Net Weight	Body	kg(lbs)	25.6(56.4)
Noise Level(Sound Press, 1.5m, H / M / L)		dB(A)	41/ 38 / 35
Power Supply		Ø, V, Hz	1, 220-240, 50
			1, 220, 60
Refrigerant Control			EEV
Transmission cable		mm^2	CVV-SB 1.0~1.5 X 2C
Panel Color			Morning fog
Panel Name(Accessory)			PT-UMC
Elevation Grill(Accessory)			PTEGM0

Notes:

1. Capacities are based on the following conditions:
   - Cooling
     - Indoor temp. 27°C[80.6°F]DB/ 19°C[66.2°F]WB
     - Outdoor temp. 35°C[95°F]DB/ 24°C[75.2°F]WB
     - Interconnecting Piping Length 7.5m
     - Level Difference of Zero
   - Heating
     - Indoor temp. 20°C[68°F]DB/ 15°C[59°F]WB
     - Outdoor temp. 7°C[44.6°F]DB/ 6°C[42.8°F]WB
     - Interconnecting Piping Length 7.5m
     - Level Difference of Zero
2. Capacities are Net Capacities
3. Due to our policy of innovation some specifications may be changed without prior notification
4. Wiring cable size must comply with the applicable local and national codes. And “Electric characteristics” chapter should be considered for electrical work and design. Especially the power cable and circuit breaker should be selected in accordance with that.
5. EEV: Electronic Expansion Valve
6. Anechoic chamber conversion value is measured at 1.5 m downward from unit centre.
   The values depends on the ambient conditions and values are normally higher in actual operation.

Conversion Formula
kcal/h= kW x 860
Btu/h = kW x 3412
cfm = m^3/min x 35.3
l/s = CMM x 1000/60

Ceiling Cassette 4-way

ARNU07GTN*4
ARNU15GTN*4
ARNU18GTN*4

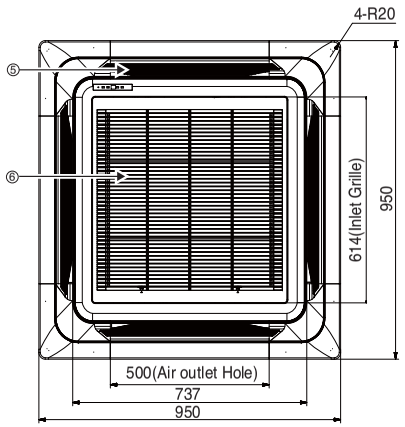

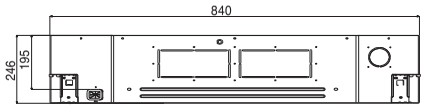

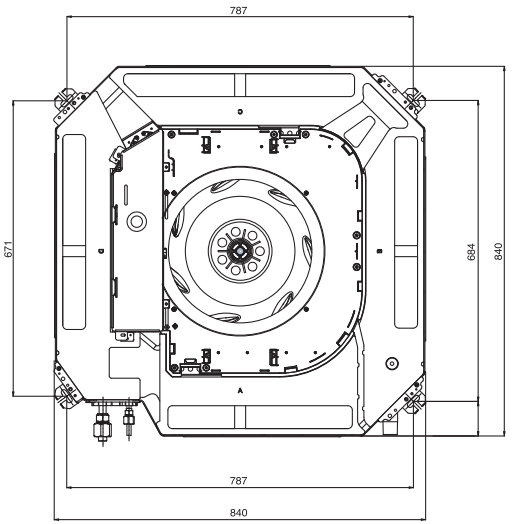

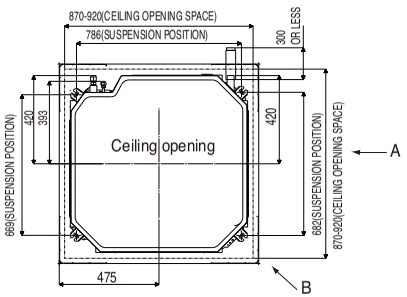

(unit : mm)

Number	Name	Descripition
1	Liquid pipe connection	Unit size(7k,15k,18k):ø9.52
2	Gas pipe connection	Unit size(7k,15k,18k):ø15.88
3	Drain pipe connection	VP25(Φ32)
4	Power supply connection	
5	Air discharge grill	
6	Air suction grill	

▣ Note

1. Unit should be installed in compliance with the installation manual in the product box.
2. Unit shall be grounded in accordance with the local regulations or applicable national codes.

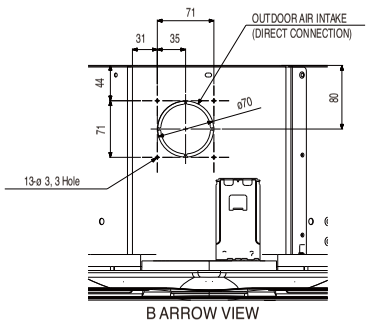

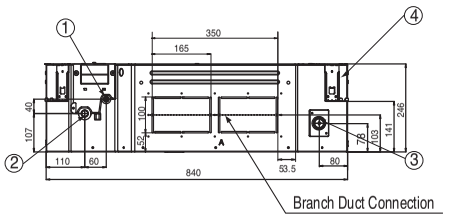

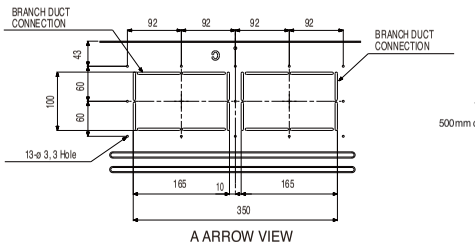

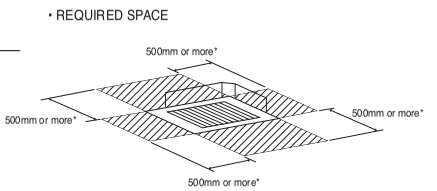

LG Electronics

CHASSIS CODE: TN

Ceiling Cassette 4-way

ARNU24GTM*4

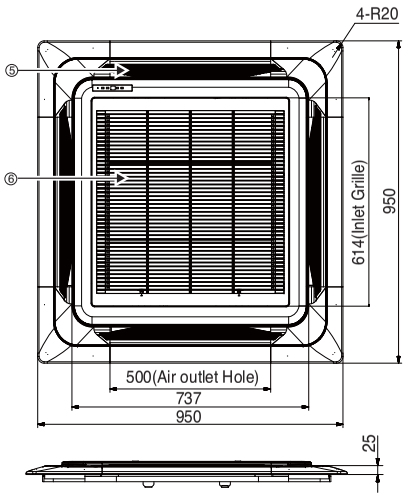

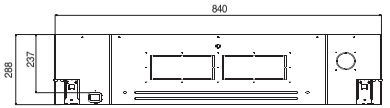

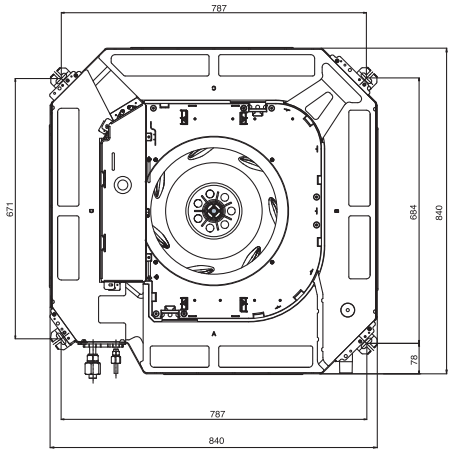

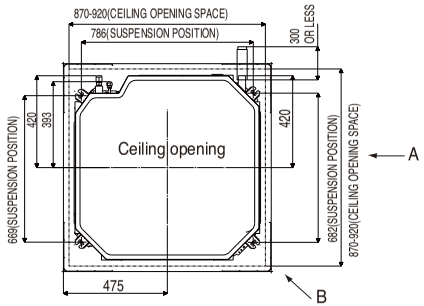

(unit : mm)

Number	Name	Descripition
1	Liquid pipe connection	Unit size(24k):ø9.52
2	Gas pipe connection	Unit size(24k):ø15.88
3	Drain pipe connection	VP25(Φ32)
4	Power supply connection	
5	Air discharge grill	
6	Air suction grill	

▣ Note

1. Unit should be installed in compliance with the installation manual in the product box.
2. Unit shall be grounded in accordance with the local regulations or applicable national codes.

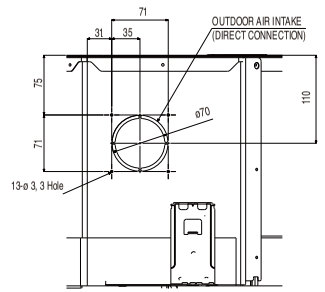

B ARROW VIEW

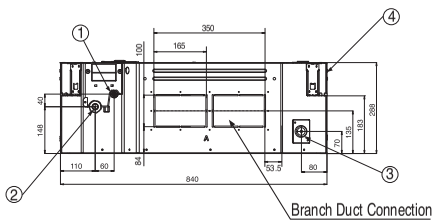

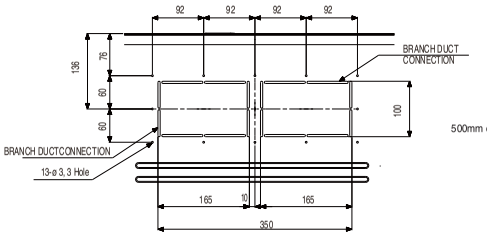

A ARROW VIEW

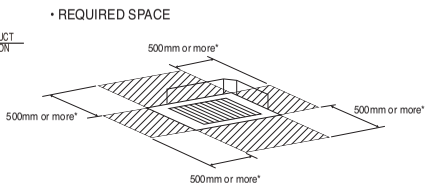

LG Electronics

CHASSIS CODE: TM

4. Piping Diagrams

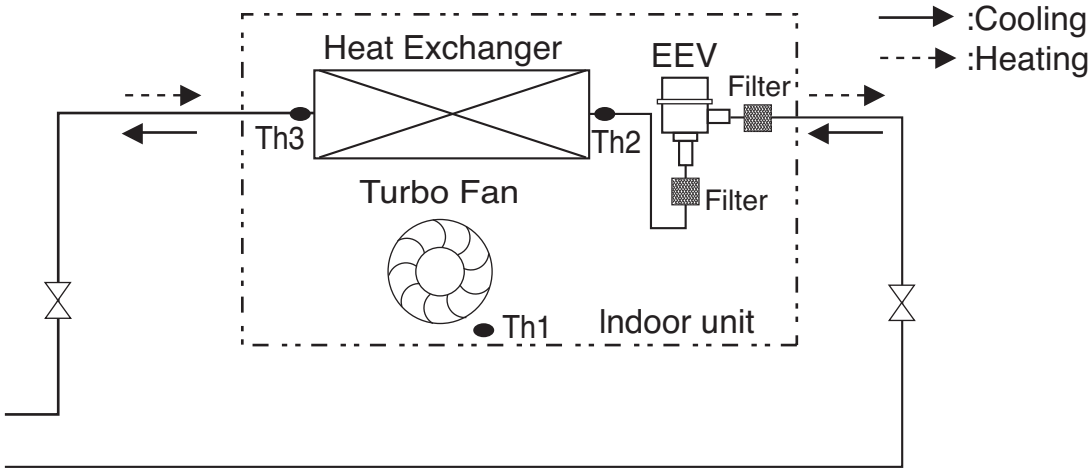

Refrigerant pipe connection port diameter

[Unit: mm(inch)]

Model	Gas	Liquid
ARNU07GTN*4	Ø15.88(5/8)	Ø9.52(3/8)
ARNU15GTN*4	Ø15.88(5/8)	Ø9.52(3/8)
ARNU18GTN*4	Ø15.88(5/8)	Ø9.52(3/8)
ARNU24GTM*4	Ø15.88(5/8)	Ø9.52(3/8)

LOC.	Description
Th1	Room thermistor
Th2	Pipe in thermistor
Th3	Pipe out thermistor

5. Wiring Diagrams

TM/TN Chassis

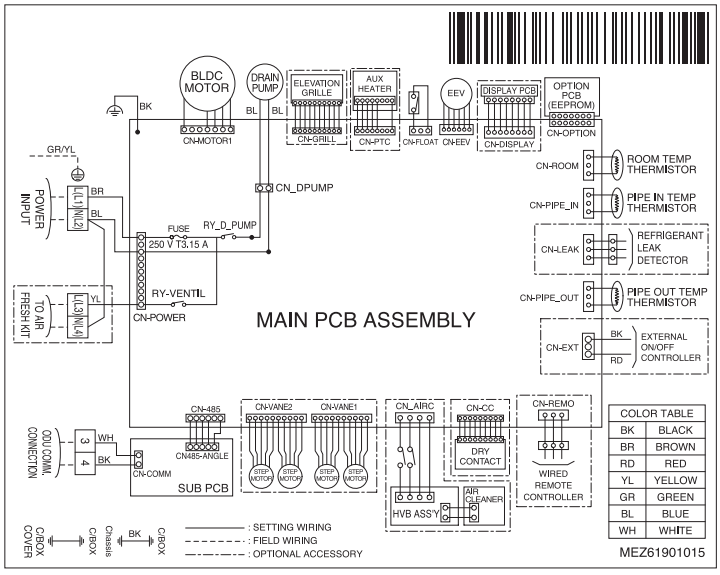

CONNECTOR NUMBER	LOCATION POINT	FUNCTION
CN-MOTOR1	Fan motor output	Motor output of BLDC
CN_DPUMP	Drain pump output	AC output for drain pump
CN-GRILL	Elevation grill	Elevation grill line
CN-PTC	Aux heater	Aux heater line
CN-LEAK	Refrigerant leak detector	Refrigerant leak detector line
CN-AIRC	Air cleaner	Air cleaner line
CN-DISPLAY	Display	Display of indoor status
CN-OPTION	Option pwb.	Communication between main and option
CN-EEV	EEV Output	EEV Control output
CN-FLOAT	Float switch input	Float switch sensing
CN-ROOM	Room sensor	Room air thermistor
CN-PIPE_IN	Suction pipe sensor	Pipe in thermistor
CN-PIPE_OUT	Discharge pipe sensor	Pipe out thermistor
CN-REMO	Remote controller	Remote control line
CN-CC	Dry contact	Dry contact line
CN-COMM	Communication	Communication between indoor and outdoor
CN-VANE1	Step motor	Step motor output
CN-VANE2	Step motor	Step motor output
CN-485	Communication	Connection between indoor and outdoor
CN-EXT	External On/Off	External On/Off signal input

Dip Switch Setting		Off	On	Remarks
SW3	GROUP	Master	Slave	Group Control setting using Wired Remote Controller
SW4	DRY CONTACT	Variable	Auto	Old Dry Contact Mode Setting 1. Variable : Auto/Manual Mode can be chosen by Wide wired remote controller or Wireless remote controller (When shipped from Factory → Manual Mode) 2. Auto : For Dry Contact, it is always Auto mode.
SW5	EXTRA 1	Off	On	1. Duct model -. OFF : Default(not operate continuosly) -. ON : Fan operate continuosly 2. Cassette Model : No Function 3. Ceiling Suspended Model -. OFF : Ceiling(default) -. ON : Floor

⚠ CAUTION

For Multi V Model, Dip Switch 1,2,6,7,8 must be set OFF
That dip switch is used for the other model.

6. Capacity Tables

6.1 Cooling Capacity

Cooling capacity

Capacity Index	Outdoor air temp. (DB, °C)	Indoor air temp. (DB/WB, °C)													
		20		23		26		27		28		30		32	
		14		16		18		19		20		22		24	
		TC	SHC	TC	SHC	TC	SHC	TC	SHC	TC	SHC	TC	SHC	TC	SHC
		kW	kW	kW	kW	kW	kW	kW	kW	kW	kW	kW	kW	kW	kW
2.2	10	1.5	1.4	1.8	1.5	2.0	1.6	2.2	1.6	2.4	1.7	2.6	1.8	2.9	1.7
	12	1.5	1.4	1.8	1.5	2.0	1.6	2.2	1.6	2.4	1.7	2.6	1.8	2.9	1.7
	14	1.5	1.4	1.8	1.5	2.0	1.6	2.2	1.6	2.4	1.7	2.6	1.8	2.8	1.7
	16	1.5	1.4	1.8	1.5	2.0	1.6	2.2	1.6	2.4	1.7	2.6	1.8	2.8	1.7
	18	1.5	1.4	1.8	1.5	2.0	1.6	2.2	1.6	2.4	1.7	2.6	1.8	2.7	1.7
	20	1.5	1.4	1.8	1.5	2.0	1.6	2.2	1.6	2.4	1.7	2.6	1.8	2.7	1.6
	21	1.5	1.4	1.8	1.5	2.0	1.6	2.2	1.6	2.4	1.7	2.6	1.8	2.7	1.6
	23	1.5	1.4	1.8	1.5	2.0	1.6	2.2	1.6	2.4	1.7	2.6	1.8	2.6	1.6
	25	1.5	1.4	1.8	1.5	2.0	1.6	2.2	1.6	2.4	1.7	2.6	1.7	2.6	1.6
	27	1.5	1.4	1.8	1.5	2.0	1.6	2.2	1.6	2.4	1.7	2.5	1.7	2.6	1.6
	29	1.5	1.4	1.8	1.5	2.0	1.6	2.2	1.6	2.4	1.7	2.5	1.7	2.5	1.5
	31	1.5	1.4	1.8	1.5	2.0	1.6	2.2	1.6	2.4	1.7	2.5	1.6	2.5	1.5
	33	1.5	1.4	1.8	1.5	2.0	1.6	2.2	1.6	2.4	1.7	2.4	1.6	2.4	1.5
	35	1.5	1.4	1.8	1.5	2.0	1.6	2.2	1.6	2.4	1.7	2.4	1.6	2.4	1.5
	37	1.5	1.4	1.8	1.5	2.0	1.6	2.2	1.6	2.3	1.6	2.3	1.6	2.4	1.4
	39	1.5	1.4	1.8	1.5	2.0	1.6	2.2	1.6	2.2	1.6	2.3	1.5	2.4	1.4
4.5	10	3.0	2.7	3.6	3.0	4.2	3.3	4.5	3.3	4.8	3.5	5.4	3.6	5.9	3.5
	12	3.0	2.7	3.6	3.0	4.2	3.3	4.5	3.3	4.8	3.5	5.4	3.6	5.8	3.5
	14	3.0	2.7	3.6	3.0	4.2	3.3	4.5	3.3	4.8	3.5	5.4	3.6	5.8	3.5
	16	3.0	2.7	3.6	3.0	4.2	3.3	4.5	3.3	4.8	3.5	5.4	3.6	5.7	3.4
	18	3.0	2.7	3.6	3.0	4.2	3.3	4.5	3.3	4.8	3.5	5.4	3.6	5.6	3.4
	20	3.0	2.7	3.6	3.0	4.2	3.3	4.5	3.3	4.8	3.5	5.4	3.6	5.5	3.3
	21	3.0	2.7	3.6	3.0	4.2	3.3	4.5	3.3	4.8	3.5	5.4	3.6	5.5	3.3
	23	3.0	2.7	3.6	3.0	4.2	3.3	4.5	3.3	4.8	3.5	5.4	3.6	5.4	3.3
	25	3.0	2.7	3.6	3.0	4.2	3.3	4.5	3.3	4.8	3.5	5.3	3.5	5.3	3.2
	27	3.0	2.7	3.6	3.0	4.2	3.3	4.5	3.3	4.8	3.5	5.2	3.5	5.3	3.2
	29	3.0	2.7	3.6	3.0	4.2	3.3	4.5	3.3	4.8	3.5	5.1	3.4	5.2	3.1
	31	3.0	2.7	3.6	3.0	4.2	3.3	4.5	3.3	4.8	3.5	5.1	3.3	5.1	3.1
	33	3.0	2.7	3.6	3.0	4.2	3.3	4.5	3.3	4.8	3.5	4.9	3.3	5.0	3.0
	35	3.0	2.7	3.6	3.0	4.2	3.3	4.5	3.3	4.8	3.5	4.9	3.3	4.9	3.0
	37	3.0	2.7	3.6	3.0	4.2	3.3	4.5	3.3	4.7	3.3	4.8	3.2	4.9	2.9
	39	3.0	2.7	3.6	3.0	4.2	3.3	4.5	3.3	4.6	3.3	4.7	3.1	4.8	2.9
5.6	10	3.8	3.7	4.5	4.0	5.2	4.4	5.6	4.5	6.0	4.7	6.7	4.8	7.3	4.7
	12	3.8	3.7	4.5	4.0	5.2	4.4	5.6	4.5	6.0	4.7	6.7	4.8	7.3	4.7
	14	3.8	3.7	4.5	4.0	5.2	4.4	5.6	4.5	6.0	4.7	6.7	4.8	7.2	4.7
	16	3.8	3.7	4.5	4.0	5.2	4.4	5.6	4.5	6.0	4.7	6.7	4.8	7.1	4.6
	18	3.8	3.7	4.5	4.0	5.2	4.4	5.6	4.5	6.0	4.7	6.7	4.8	6.9	4.6
	20	3.8	3.7	4.5	4.0	5.2	4.4	5.6	4.5	6.0	4.7	6.7	4.8	6.9	4.5
	21	3.8	3.7	4.5	4.0	5.2	4.4	5.6	4.5	6.0	4.7	6.7	4.8	6.9	4.5
	23	3.8	3.7	4.5	4.0	5.2	4.4	5.6	4.5	6.0	4.7	6.7	4.8	6.7	4.4
	25	3.8	3.7	4.5	4.0	5.2	4.4	5.6	4.5	6.0	4.7	6.6	4.7	6.6	4.3
	27	3.8	3.7	4.5	4.0	5.2	4.4	5.6	4.5	6.0	4.7	6.5	4.7	6.5	4.3
	29	3.8	3.7	4.5	4.0	5.2	4.4	5.6	4.5	6.0	4.7	6.4	4.6	6.5	4.2
	31	3.8	3.7	4.5	4.0	5.2	4.4	5.6	4.5	6.0	4.7	6.3	4.5	6.4	4.1
	33	3.8	3.7	4.5	4.0	5.2	4.4	5.6	4.5	6.0	4.7	6.2	4.5	6.2	4.0
	35	3.8	3.7	4.5	4.0	5.2	4.4	5.6	4.5	6.0	4.7	6.1	4.4	6.2	4.0
	37	3.8	3.7	4.5	4.0	5.2	4.4	5.6	4.5	5.8	4.5	5.9	4.3	6.1	4.0
	39	3.8	3.7	4.5	4.0	5.2	4.4	5.6	4.5	5.7	4.4	5.8	4.2	6.0	3.9

Notes:

TC: Total Capacity(kW)

SHC: Sensible Heat Capacity(kW)

1. Capacity tables show the representative value of conditions which may occur.
2. Refer to Capacity Correction Factor in the outdoor unit PDB for the actual performance data of each indoor unit and outdoor unit combination.

6. Capacity Tables

Cooling capacity

Capacity Index	Outdoor air temp. (DB, °C)	Indoor air temp. (DB/WB, °C)													
		20		23		26		27		28		30		32	
		14		16		18		19		20		22		24	
		TC	SHC	TC	SHC	TC	SHC	TC	SHC	TC	SHC	TC	SHC	TC	SHC
		kW	kW	kW	kW	kW	kW	kW	kW	kW	kW	kW	kW	kW	kW
7.1	10	4.8	4.7	5.7	5.2	6.6	5.6	7.1	5.8	7.6	6.0	8.5	6.2	9.3	6.1
	12	4.8	4.7	5.7	5.2	6.6	5.6	7.1	5.8	7.6	6.0	8.5	6.2	9.2	6.1
	14	4.8	4.7	5.7	5.2	6.6	5.6	7.1	5.8	7.6	6.0	8.5	6.2	9.1	6.0
	16	4.8	4.7	5.7	5.2	6.6	5.6	7.1	5.8	7.6	6.0	8.5	6.2	9.0	5.9
	18	4.8	4.7	5.7	5.2	6.6	5.6	7.1	5.8	7.6	6.0	8.5	6.2	8.8	5.9
	20	4.8	4.7	5.7	5.2	6.6	5.6	7.1	5.8	7.6	6.0	8.5	6.2	8.7	5.8
	21	4.8	4.7	5.7	5.2	6.6	5.6	7.1	5.8	7.6	6.0	8.5	6.2	8.7	5.8
	23	4.8	4.7	5.7	5.2	6.6	5.6	7.1	5.8	7.6	6.0	8.5	6.2	8.5	5.6
	25	4.8	4.7	5.7	5.2	6.6	5.6	7.1	5.8	7.6	6.0	8.4	6.1	8.4	5.5
	27	4.8	4.7	5.7	5.2	6.6	5.6	7.1	5.8	7.6	6.0	8.2	6.0	8.3	5.5
	29	4.8	4.7	5.7	5.2	6.6	5.6	7.1	5.8	7.6	6.0	8.1	5.9	8.2	5.4
	31	4.8	4.7	5.7	5.2	6.6	5.6	7.1	5.8	7.6	6.0	8.0	5.8	8.1	5.3
	33	4.8	4.7	5.7	5.2	6.6	5.6	7.1	5.8	7.6	6.0	7.8	5.8	7.9	5.2
	35	4.8	4.7	5.7	5.2	6.6	5.6	7.1	5.8	7.6	6.0	7.7	5.6	7.8	5.2
	37	4.8	4.7	5.7	5.2	6.6	5.6	7.1	5.8	7.4	5.8	7.5	5.5	7.7	5.1
	39	4.8	4.7	5.7	5.2	6.6	5.6	7.1	5.8	7.2	5.6	7.4	5.4	7.6	5.0

Notes:

TC: Total Capacity(kW)

SHC: Sensible Heat Capacity(kW)

1. Capacity tables show the representative value of conditions which may occur.
2. Refer to Capacity Correction Factor in the outdoor unit PDB for the actual performance data of each indoor unit and outdoor unit combination.

6. Capacity Tables

6.2 Heating Capacity

Heating capacity

Capacity Index	Outdoor air temp.		Indoor air temp. (DB, °C)					
			16	18	20	21	22	24
	DB(°C)	WB(°C)	TC	TC	TC	TC	TC	TC
			kW	kW	kW	kW	kW	kW
2.2	-24.8	-25.0	1.4	1.4	1.4	1.4	1.4	1.4
	-21.8	-22.0	1.7	1.7	1.7	1.7	1.7	1.7
	-19.8	-20.0	1.8	1.8	1.8	1.8	1.8	1.8
	-18.8	-19.0	1.9	1.9	1.9	1.9	1.9	1.9
	-16.7	-17.0	2.0	2.0	2.0	2.0	2.0	2.0
	-14.7	-15.0	2.1	2.1	2.1	2.1	2.1	2.0
	-12.6	-13.0	2.2	2.2	2.2	2.2	2.1	2.1
	-10.5	-11.0	2.3	2.3	2.2	2.2	2.2	2.2
	-9.5	-10.0	2.3	2.3	2.3	2.3	2.3	2.2
	-8.5	-9.1	2.3	2.3	2.3	2.3	2.3	2.2
	-7.0	-7.6	2.4	2.4	2.4	2.4	2.3	2.2
	-5.0	-5.6	2.5	2.5	2.5	2.4	2.3	2.2
	-3.0	-3.7	2.6	2.6	2.5	2.4	2.3	2.2
	0.0	-0.7	2.7	2.6	2.5	2.4	2.3	2.2
	3.0	2.2	2.7	2.7	2.5	2.4	2.3	2.2
	5.0	4.1	2.8	2.7	2.5	2.4	2.3	2.2
	7.0	6.0	2.8	2.7	2.5	2.4	2.3	2.2
	9.0	7.9	2.8	2.7	2.5	2.4	2.3	2.2
	11.0	9.8	2.8	2.7	2.5	2.4	2.3	2.2
	13.0	11.8	2.8	2.7	2.5	2.4	2.3	2.2
	15.0	13.7	2.8	2.7	2.5	2.4	2.3	2.2
4.5	-24.8	-25.0	2.9	2.9	2.9	2.9	2.9	2.9
	-21.8	-22.0	3.5	3.5	3.5	3.5	3.5	3.5
	-19.8	-20.0	3.7	3.7	3.7	3.7	3.7	3.6
	-18.8	-19.0	3.8	3.7	3.7	3.7	3.7	3.7
	-16.7	-17.0	3.9	3.9	3.9	3.9	3.9	3.9
	-14.7	-15.0	4.1	4.1	4.1	4.1	4.1	4.1
	-12.6	-13.0	4.3	4.3	4.3	4.3	4.3	4.3
	-10.5	-11.0	4.5	4.5	4.5	4.5	4.5	4.4
	-9.5	-10.0	4.6	4.6	4.6	4.6	4.6	4.4
	-8.5	-9.1	4.7	4.7	4.7	4.7	4.7	4.4
	-7.0	-7.6	4.8	4.8	4.8	4.8	4.7	4.4
	-5.0	-5.6	5.0	5.0	5.0	4.8	4.7	4.4
	-3.0	-3.7	5.3	5.1	5.0	4.8	4.7	4.4
	0.0	-0.7	5.3	5.2	5.0	4.8	4.7	4.4
	3.0	2.2	5.5	5.3	5.0	4.8	4.7	4.4
	5.0	4.1	5.6	5.3	5.0	4.8	4.7	4.4
	7.0	6.0	5.6	5.3	5.0	4.8	4.7	4.4
	9.0	7.9	5.6	5.3	5.0	4.8	4.7	4.4
	11.0	9.8	5.6	5.3	5.0	4.8	4.7	4.4
	13.0	11.8	5.6	5.3	5.0	4.8	4.7	4.4
	15.0	13.7	5.6	5.3	5.0	4.8	4.7	4.4
5.6	-24.8	-25.0	3.6	3.6	3.6	3.6	3.6	3.6
	-21.8	-22.0	4.4	4.4	4.4	4.4	4.4	4.4
	-19.8	-20.0	4.6	4.6	4.6	4.6	4.6	4.6
	-18.8	-19.0	4.8	4.7	4.7	4.7	4.7	4.7
	-16.7	-17.0	5.0	5.0	5.0	4.9	4.9	4.9
	-14.7	-15.0	5.2	5.2	5.2	5.2	5.2	5.2
	-12.6	-13.0	5.5	5.4	5.4	5.4	5.4	5.4
	-10.5	-11.0	5.7	5.7	5.7	5.7	5.7	5.5
	-9.5	-10.0	5.8	5.8	5.8	5.8	5.8	5.5
	-8.5	-9.1	5.9	5.9	5.9	5.9	5.9	5.5
	-7.0	-7.6	6.1	6.1	6.1	6.0	5.9	5.5
	-5.0	-5.6	6.3	6.3	6.3	6.1	5.9	5.5
	-3.0	-3.7	6.6	6.5	6.3	6.1	5.9	5.5
	0.0	-0.7	6.7	6.5	6.3	6.1	5.9	5.5
	3.0	2.2	6.9	6.7	6.3	6.1	5.9	5.5
	5.0	4.1	7.0	6.7	6.3	6.1	5.9	5.5
	7.0	6.0	7.1	6.7	6.3	6.1	5.9	5.5
	9.0	7.9	7.1	6.7	6.3	6.1	5.9	5.5
	11.0	9.8	7.1	6.7	6.3	6.1	5.9	5.5
	13.0	11.8	7.1	6.7	6.3	6.1	5.9	5.5
	15.0	13.7	7.1	6.7	6.3	6.1	5.9	5.5

Notes:
TC: Total Capacity(kW)
1. Capacity tables show the representative value of conditions which may occur.
2. is shown as reference. When selecting the outdoor units, avoid the outdoor air temperature range shown by .
3. In accordance with operation limits of outdoor unit, applicable range of capacity tables is different.
4. Refer to Capacity Correction Factor in the outdoor unit PDB for the actual performance data of each indoor unit and outdoor unit combination.

6. Capacity Tables

Heating capacity

Capacity Index	Outdoor air temp.		Indoor air temp. (DB, °C)					
			16	18	20	21	22	24
	DB(°C)	WB(°C)	TC	TC	TC	TC	TC	TC
			kW	kW	kW	kW	kW	kW
7.1	-24.8	-25.0	4.6	4.6	4.6	4.6	4.6	4.6
	-21.8	-22.0	5.6	5.6	5.6	5.6	5.6	5.5
	-19.8	-20.0	5.9	5.9	5.9	5.9	5.9	5.8
	-18.8	-19.0	6.0	6.0	6.0	6.0	6.0	6.0
	-16.7	-17.0	6.3	6.3	6.3	6.3	6.3	6.3
	-14.7	-15.0	6.6	6.6	6.6	6.6	6.6	6.6
	-12.6	-13.0	6.9	6.9	6.9	6.9	6.9	6.9
	-10.5	-11.0	7.2	7.2	7.2	7.2	7.2	7.0
	-9.5	-10.0	7.4	7.4	7.3	7.3	7.3	7.0
	-8.5	-9.1	7.5	7.5	7.5	7.5	7.5	7.0
	-7.0	-7.6	7.7	7.7	7.7	7.7	7.5	7.0
	-5.0	-5.6	8.0	8.0	8.0	7.7	7.5	7.0
	-3.0	-3.7	8.4	8.2	8.0	7.7	7.5	7.0
	0.0	-0.7	8.6	8.3	8.0	7.7	7.5	7.0
	3.0	2.2	8.8	8.5	8.0	7.7	7.5	7.0
	5.0	4.1	8.9	8.5	8.0	7.7	7.5	7.0
	7.0	6.0	9.0	8.5	8.0	7.7	7.5	7.0
	9.0	7.9	9.0	8.5	8.0	7.7	7.5	7.0
	11.0	9.8	9.0	8.5	8.0	7.7	7.5	7.0
	13.0	11.8	9.0	8.5	8.0	7.7	7.5	7.0
	15.0	13.7	9.0	8.5	8.0	7.7	7.5	7.0

Notes:

TC: Total Capacity(kW)

1. Capacity tables show the representative value of conditions which may occur.
2. is shown as reference. When selecting the outdoor units, avoid the outdoor air temperature range shown by .
3. In accordance with operation limits of outdoor unit, applicable range of capacity tables is different.
4. Refer to Capacity Correction Factor in the outdoor unit PDB for the actual performance data of each indoor unit and outdoor unit combination.

7. Air Velocity and Temperature Distribution(Reference Data)

ARNU07GTN*4

Cooling

Discharge angle: 40°

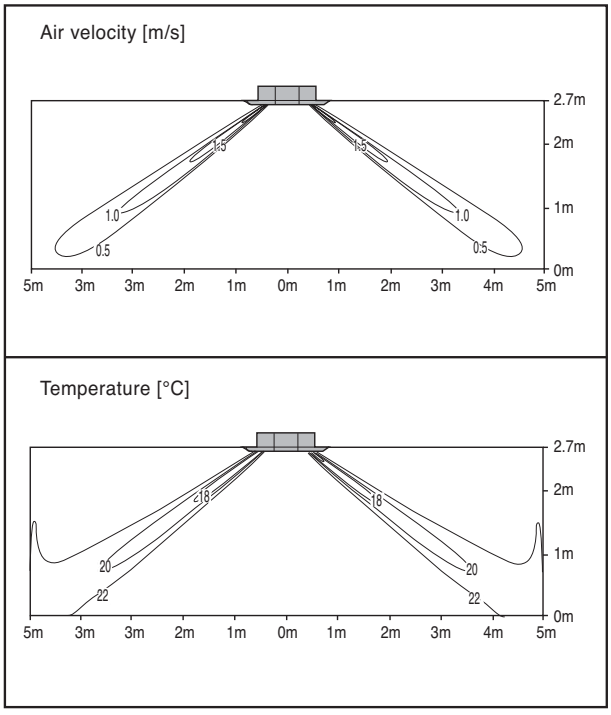

Heating

Discharge angle: 50°

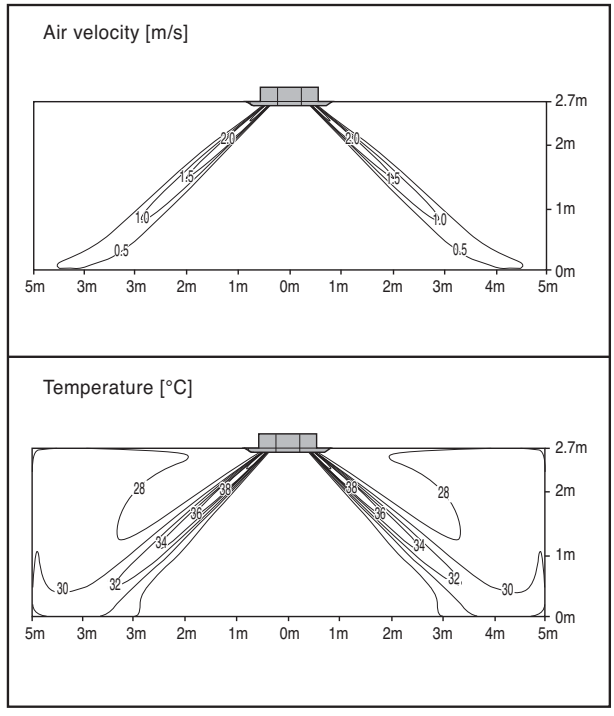

ARNU15GTN*4

Cooling

Discharge angle: 40°

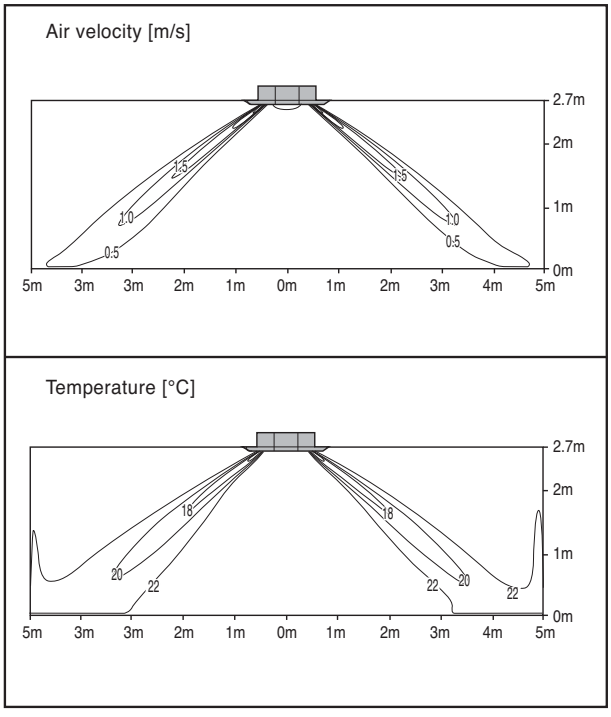

Heating

Discharge angle: 50°

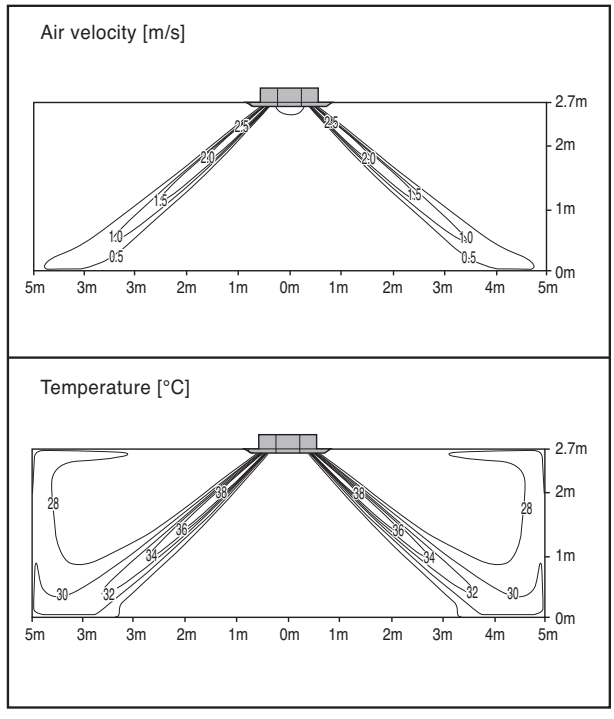

Note: Fan operating mode is high.

7. Air Velocity and Temperature Distribution(Reference Data)

ARNU18GTN*4

Cooling

Discharge angle: 40°

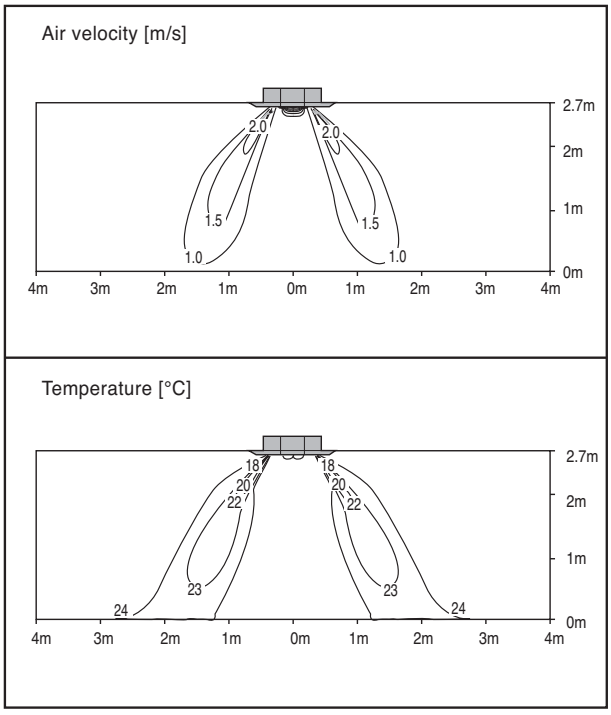

Heating

Discharge angle: 50°

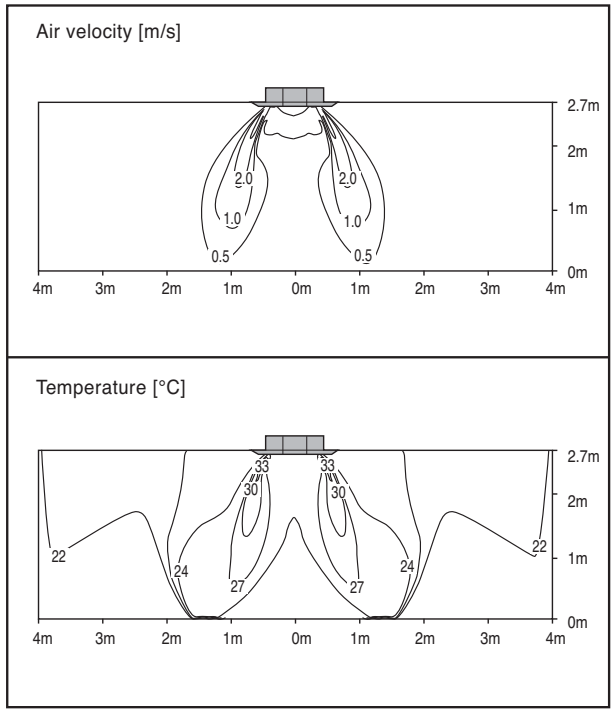

ARNU24GTM*4

Cooling

Discharge angle: 40°

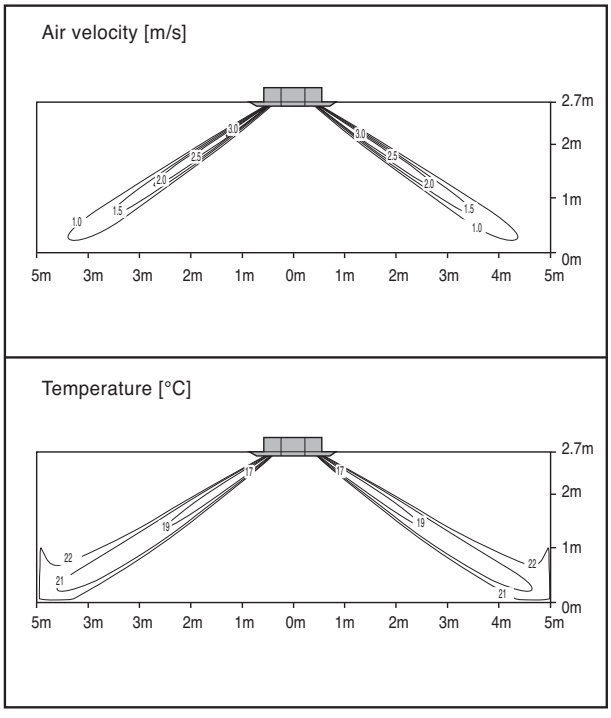

Heating

Discharge angle: 50°

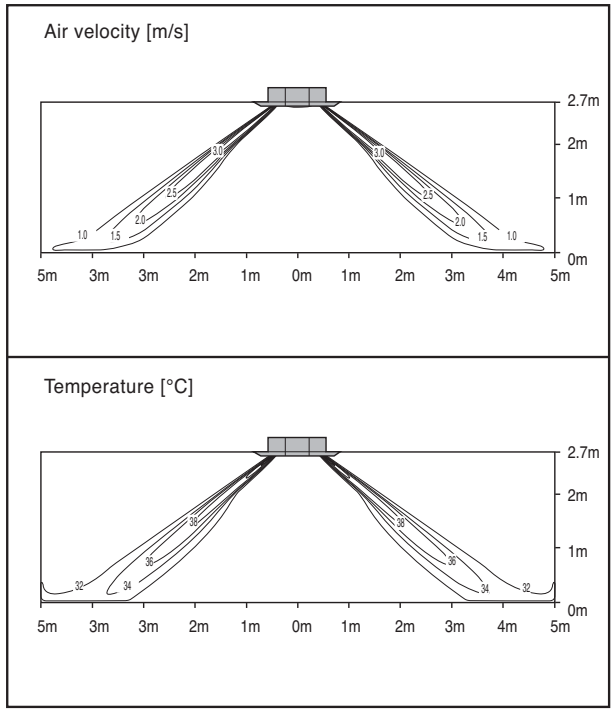

Note: Fan operating mode is high.

8. Electric Characteristics

Units					Power Supply		IFM		Input(W)	
Model	Type	Hz	Volts	Voltage Range	MCA	MFA	kW	FLA	Cooling	Heating
ARNU07GTN*4	TN	50	220-240	Max:264 Min:198	0.71	15	0.135	0.56	144	144
ARNU15GTN*4	TN				0.71	15	0.135	0.56	144	144
ARNU18GTN*4	TN				0.71	15	0.135	0.56	144	144
ARNU24GTM*4	TM				1.60	15	0.135	1.30	144	144
ARNU07GTN*4	TN	60	220	Max:242 Min:198	0.71	15	0.135	0.56	144	144
ARNU15GTN*4	TN				0.71	15	0.135	0.56	144	144
ARNU18GTN*4	TN				0.71	15	0.135	0.56	144	144
ARNU24GTM*4	TM				1.60	15	0.135	1.30	144	144

Symbols:

MCA : Minimum Circuit Amperes (A)

MFA : Maximum Fuse Amperes(see note 5)

kW : Fan Motor Rated Output(kW)

FLA : Full Load Amperes(A)

IFM : Indoor Fan Motor

Note :

1. Voltage Range
   Units are suitable for use on electrical system where voltage supplied to unit terminals is not below or above the listed range limits.
2. Maximum allowable voltage unbalance between phase is 2%.
3. MCA/MFA
   MCA = 1.25 x FLA
   MFA ≤ 4 x FLA
   (Next lower standard fuse rating. Minimum 15A)
4. Select wire size based on the larger value on the MCA.
5. Instead of fuse, use Circuit Breaker.

9. Sound Levels

9.1 Sound Pressure Levels

Overall

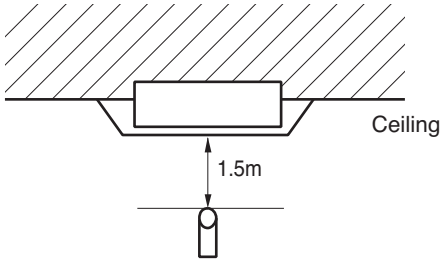

❉ Measuring place : Anechoic chamber

Notes:

1. Sound measured at 1.5m away from the center of the unit
2. Operating conditionl
   - Power source : 220-240V 50Hz / 220V 60Hz
   - Cooling : Indoor temperature (27°C DB, 19°C WB), Outdoor temperature (35°C DB, 24°C WB)
   - Heating : Indoor temperature (20°C DB, 15°C WB), Outdoor temperature (7°C DB, 6°C WB)
3. Reference accoustic pressure 0dB = 20μPa
4. Sound level will vary depending on a range of factors such as the construction(acoustic absorption coefficient) of particular room in which the equipment in installed.

Model	Sound Pressure Levels dB(A)		
	H	M	L
ARNU07GTN*4	29	26	24
ARNU15GTN*4	32	29	26
ARNU18GTN*4	34	30	26
ARNU24GTM*4	41	38	35

ARNU07GTN*4

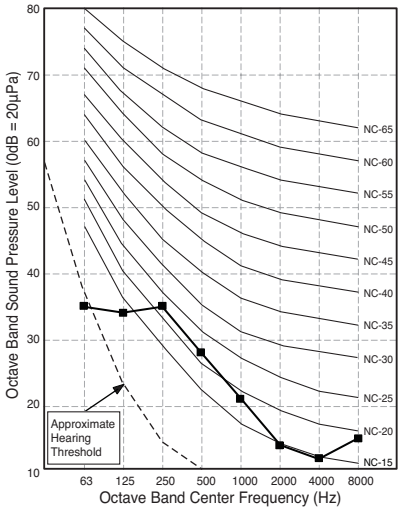

ARNU15GTN*4

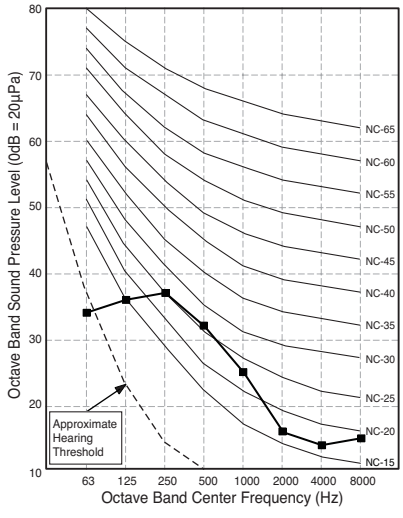

ARNU18GTN*4

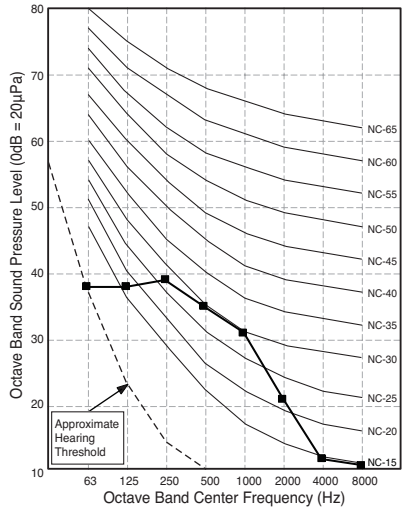

9. Sound Levels

ARNU24GTM*4

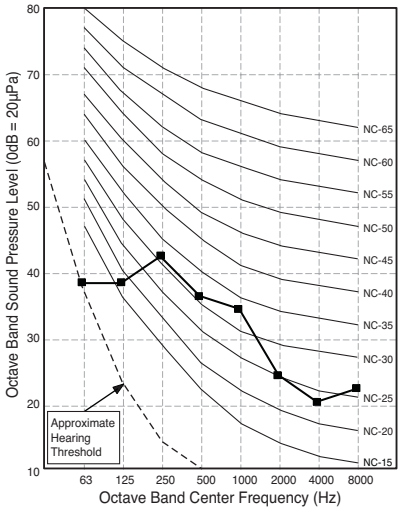

9. Sound Levels

9.2 Sound Power Levels

Model	Sound Power Levels dB(A)
	High Fan Speed
ARNU07GTN*4	44.0
ARNU15GTN*4	47.0
ARNU18GTN*4	48.0
ARNU24GTM*4	56.0

Notes:

- Data is valid at diffuse field condition
- Data is valid at nominal operating condition
- Sound level can be increased in static pressure mode or used air guide.
- Sound power level is measured on the rated condition in the reverberation rooms.
- Sound level will vary depending on a range of factors such as the construction (acoustic absorption coefficient) of particular room in which the equipment in installed.
- Reference acoustic intensity 0dB = 10E-6μW/m²

ARNU07GTN*4

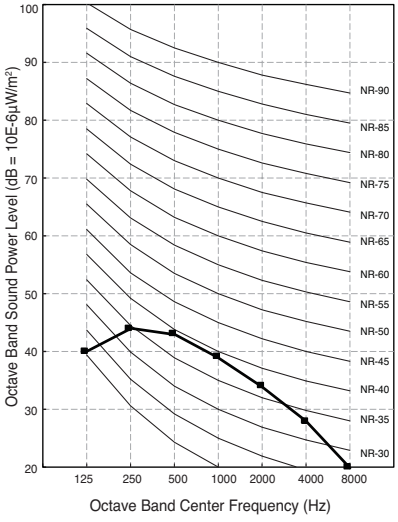

ARNU15GTN*4

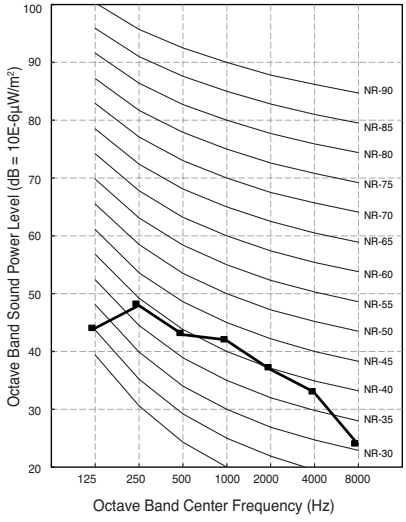

ARNU18GTN*4

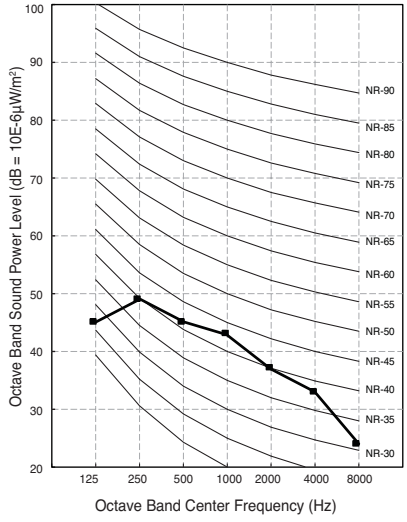

ARNU24GTM*4

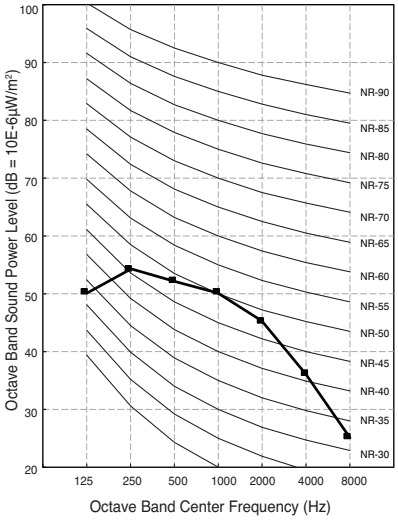

10. Installation

- Please read this instruction sheet completely before installing the product.
- When the power cord is damaged, replacement work shall be performed by authorized personnel only.
- Installation work must be performed in accordance with the national wiring standards by authorized personnel only.

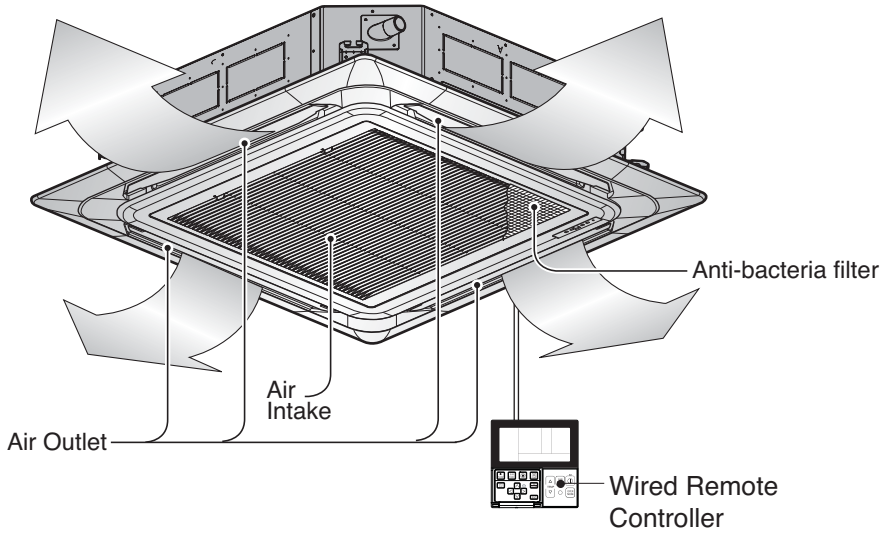

Required Parts

- Connecting cable
- Pipes: Gas side
  Liquid side
- Hanging Bolt
  (W 3/8 or M10 length 650mm)
- Insulated drain hose
- Additional Drain hose

Required Tools

- Level
- Screw driver
- Electric drill
- Hole core drill
- Flaring Tool set
- Torque Wrenches
- Hexagonal Wrench
- Gas-leak detector
- Thermometer

10.1 Selection of the best location

- If the temperature might rise above 30°C or the humidity might rise above RH 80%, attach the Dew-Protective kit or use another insulation to the indoor body.

  ❊ Dew Protective kit is sold separately.

  Use glass wool material or polyethylene foam and make sure at least 10mm thick.
- There should not be any heat source or steam near the unit.
- There should not be any obstacles to the air circulation.
- A place where air circulation in the room will be good.
- A place where drainage can be easily obtained.
- A place where noise prevention is taken into consideration.
- Do not install the unit near the door way.
- Ensure the spaces indicated by arrows from the wall, ceiling, or other obstacles.
- The indoor unit must have sufficient maintenance space.

■ TM/TN Chassis

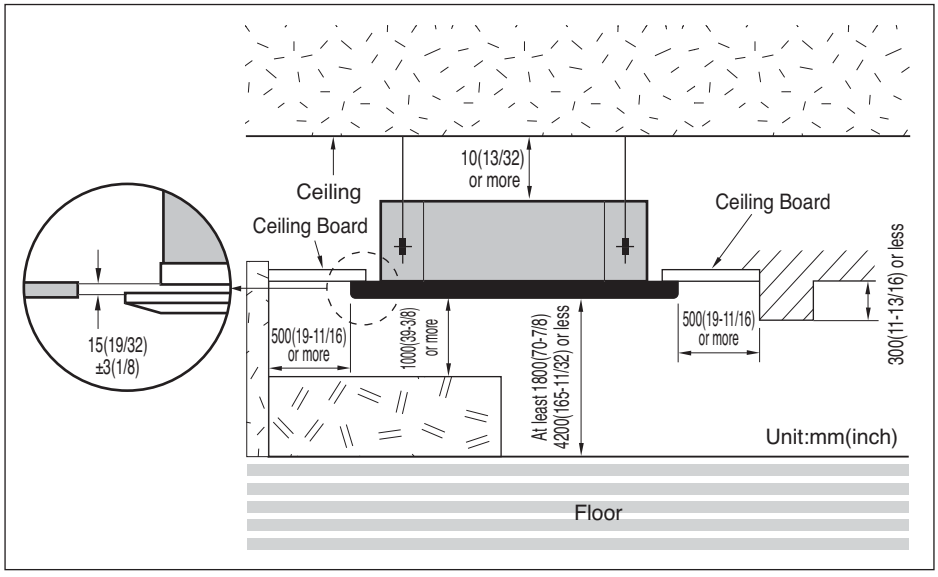

10.2 Ceiling opening dimensions and hanging bolt location

• The dimensions of the paper pattern for installation are the same as those of the ceiling opening dimensions.

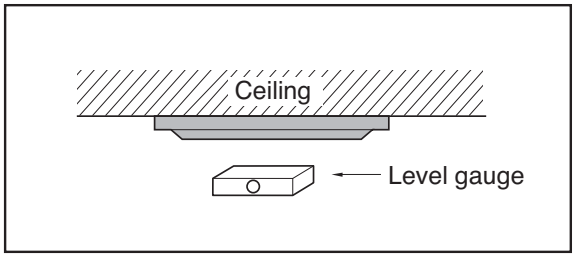

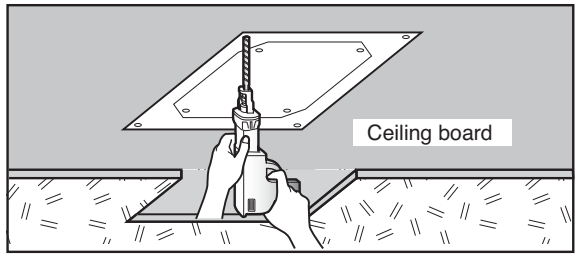

TM/TN Chassis

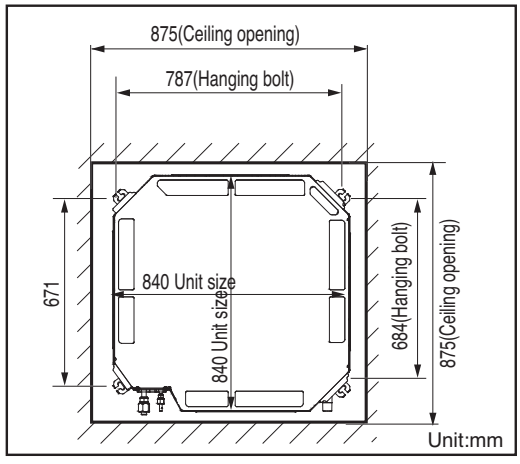

⚠ CAUTION

- This air-conditioner uses a drain pump.
- Install the unit horizontally using a level gauge.
- During the installation, care should be taken not to damage electric wires.

- Select and mark the position for fixing bolts and piping hole.
- Decide the position for fixing bolts slightly tilted to the drain direction after considering the direction of drain hose.
- Drill the hole for anchor bolt on the wall.

10. Installation

NOTE:

• Avoid the following installation location.

1. Such places as restaurants and kitchen where considerable amount of oil steam and flour is generated.
   These may cause heat exchange efficiency reduction, or water drops, drain pump mal-function.
   In these cases, take the following actions;
   • Make sure that ventilation fan is enough to cover all noxious gases from this place.
   • Ensure enough distance from the cooking room to install the air conditioner in such a place where it may not suck oily steam.

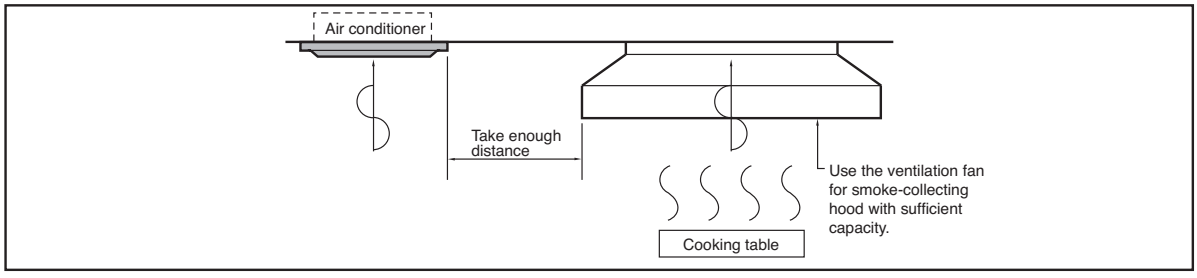

2. Avoid installng air conditioner in such places where cooking oil or iron powder is generated.
3. Avoid places where inflammable gas is generated.
4. Avoid place where noxious gas is generated.
5. Avoid places near high frequency generators.

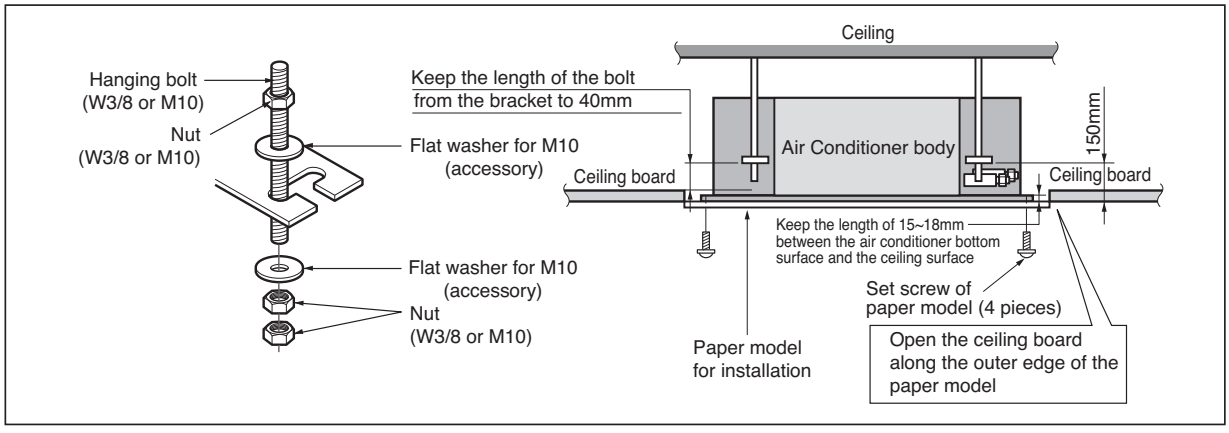

• The following parts are locally purchased.
① Hanging Bolt - W 3/8 or M10
② Nut - W 3/8 or M10
③ Spring Washer - M10
④ Plate Washer - M10

⚠ CAUTION

• Tighten the nut and bolt to prevent the unit from falling.

10.3 Wiring Connection

Connect the wires to the terminals on the control board individually according to the outdoor unit connection.

- Ensure that the color of the wires of outdoor unit and the terminal No. are the same as those of indoor unit respectively.

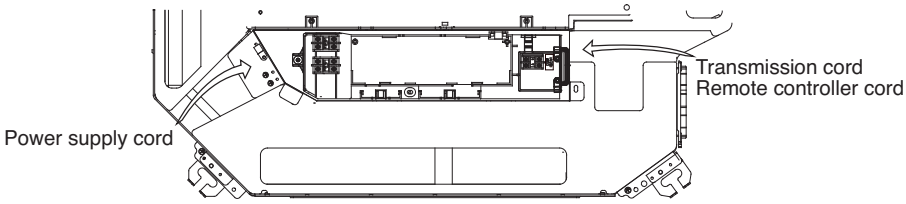

• TM/TN Chassis

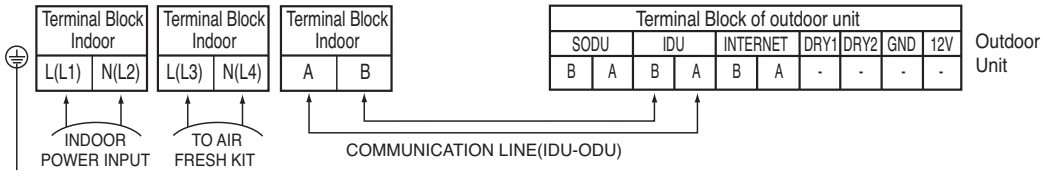

⚠ WARNING

Make sure that the screws of the terminal are not loose.

10.4 Installation of Decoration Panel

The decoration panel has its installation direction.

Before installing the decoration panel, always remove the paper template.

1. Temporarily fix two decoration panel fixing screws (hexagon M5 screw) on the unit body. (Tighten by amount 10mm in length.)
   The fixing screws (hexagon M5 screw) are included in the indoor unit box.
2. Remove the air inlet grille from the decoration panel. (Remove the hook for the air inlet grille cord.)
3. Hook the decoration panel key hole (⊂⊃) on the screws fixed in step above, and slide the panel so that the screws reach the key hole edge.
4. Retighten completely two temporarily fixed screws and other two screws. (Total 4 screws)
5. Connect the louver motor connector and display connector.
6. After tightening these screws, install the air inlet grille (including the air filter).

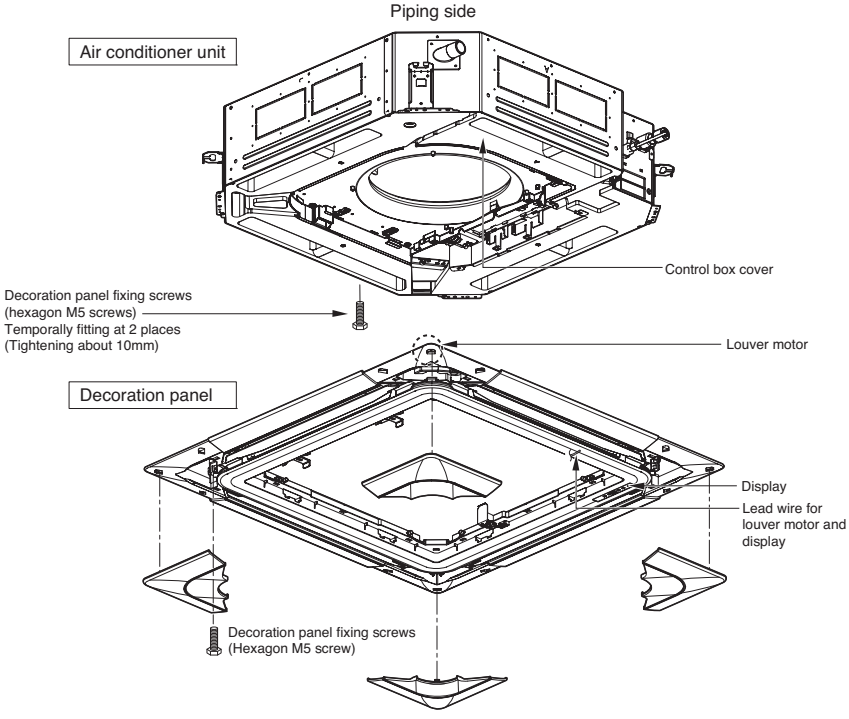

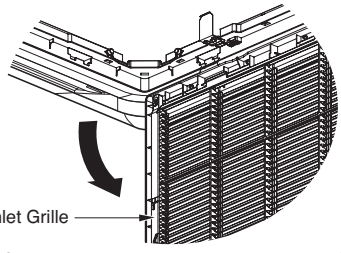

⚠ CAUTION

Install certainly the decoration panel.
Cool air leakage causes sweating.

⇨ Water drops fall.

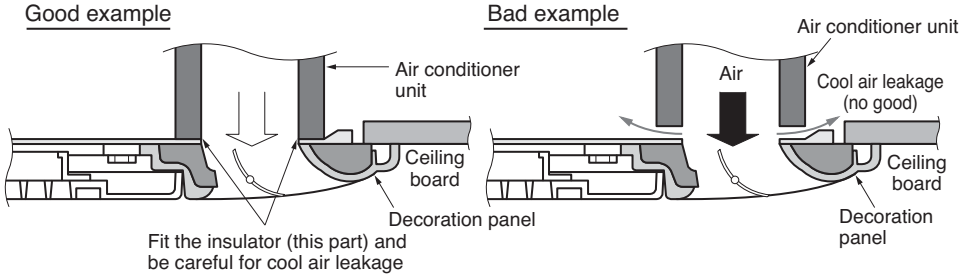

10.5 Indoor Unit Drain Piping

- Drain piping must have down-slope (1/50 to 1/100): be sure not to provide up-and-down slope to prevent reversal flow.
- During drain piping connection, be careful not to exert extra force on the drain port on the indoor unit.
- The outside diameter of the drain connection on the indoor unit is 32mm.

Piping material: Polyvinyl chloride pipe inner diometes Ø 25mm and pipe fittings

- Be sure to install heat insulation on the drain piping.

Heat insulation material: Polyethylene foam with thickness more than 8 mm.

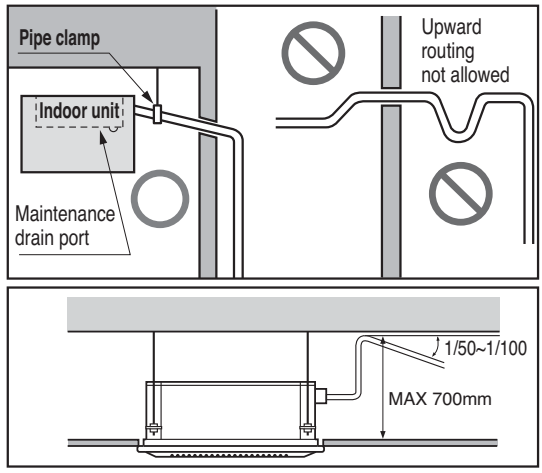

Drain test

The air conditioner uses a drain pump to drain water.
Use the following procedure to test the drain pump operation:

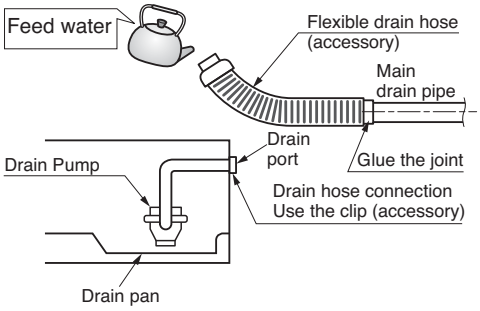

- Connect the main drain pipe to the exterior and leave it provisionally until the test comes to an end.
- Feed water to the flexible drain hose and check the piping for leakage.
- Be sure to check the drain pump for normal operating and noise when electrical wiring is complete.
- When the test is complete, connect the flexible drain hose to the drain port on the indoor unit.

⚠ CAUTION

The supplied flexible drain hose should not be strained.
A strained hose may cause leakage of water.

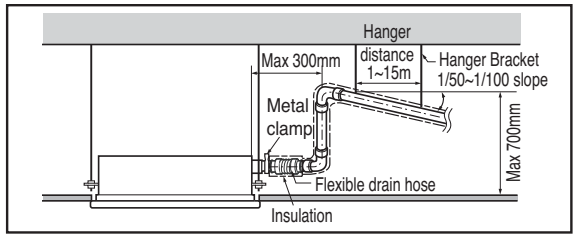

10. Installation

⚠ CAUTION

After the confirmation of the above conditions, prepare the wiring as follows:

1) Never fail to have separate power specially for the air conditioner. As for the method of wiring, follow the circuit diagram pasted on the inside of control box cover.
2) Provide a circuit breaker switch between power source and the unit.
3) The screw which fasten the wiring in the casing of electrical fittings are liable to come loose from vibrations to which the unit is subjected during the course of transportation. Check them and make sure that they are all tightly fastened. (If they are loose, it could give rise to burn-out of the wires.)
4) Confirm the specification of power source
5) Confirm that electrical capacity is sufficient.
6) Be sure that the starting voltage is maintained at more than 90 percent of the rated voltage marked on the name plate.
7) Confirm that the cable thickness is as specified in the power sources specification.
(Particularly note the relation between cable length and thickness.)
8) Do not install the leakage breaker in a place which is wet or moist.
Water or moist may cause short circuit.
9) The following troubles would be caused by voltage drop-down.
- Vibration of a magnetic switch, damage on the contact point there of, fuse breaking, disturbance to the normal function of a overload protection device.
- Proper starting power is not given to the compressor.

HAND OVER

Teach the customer the operation and maintenance procedures, using the operation manual (air filter cleaning, temperature control, etc.).

WIRED REMOTE CONTROLLER INSTALLATION

- Since the room temperature sensor is in the remote controller, the remote controller box should be installed in a place away from direct sunlight, high humidity and direct supply of cold air to maintain proper space temperature.
  Install the remote controller about 5ft(1.5m) above the floor in an area with good air circulation at an average temperature.

Do not install the remote controller where it can be affected by:

- Drafts, or dead spots behind doors and in corners.
- Hot or cold air from ducts.
- Radiant heat from sun or appliances.
- Concealed pipes and chimneys.
- Uncontrolled areas such as an outside wall behind the remote controller.
- This remote controller is equipped with a seven segment LED. display. For proper display of the remote controller LED's, the remote controller should be installed properly as shown in Fig.1. (The standard height is 1.2~1.5 m from floor level.)

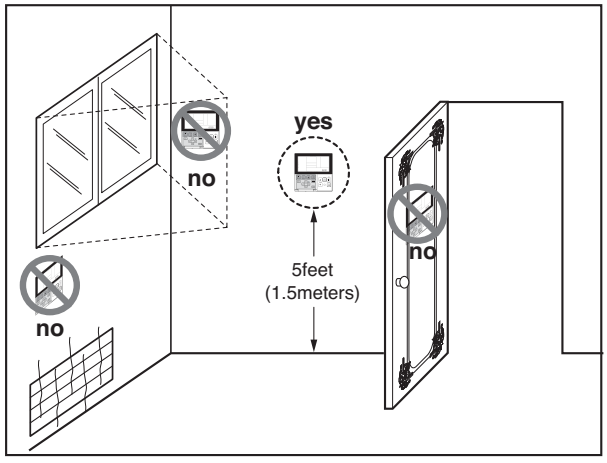

Fig.1 Typical locations for remote controller

11. Accessories

Standard Accessories

Name	Drain hose	Clamp metal	Washer for hanging backet	Clamp (Tie Wrap)	Insulation for fitting	Bolt	(Other)
Quantity	1 EA	2 EA	8 EA	4 EA	1 SET	4 EA	
Shape				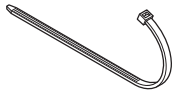	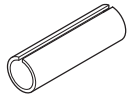 for gas pipe 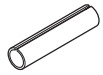 for liquid pipe	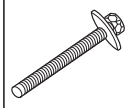	• Paper pattern for installation • Owner's manual • Installation manual

⚠ CAUTION

• Use only those accessories (Standard or optional) which have designated specifications.

MULTI V™ Indoor unit

Ceiling Concealed Duct (High Static)

1. List of functions
2. Specifications
3. Dimensions & Gravity point
4. Piping Diagrams
5. Wiring Diagrams
6. Capacity Tables
7. External Static Pressure(E.S.P) & Air Flow
8. Electric Characteristics
9. Sound Levels
10. Installation
11. Accessories

1. List of functions

Category	Function	ARNU28GBGA4, ARNU36GBGA4, ARNU42GBGA4, ARNU48GBRA4 ARNU54GBRA4, ARNU76GB8A4, ARNU96GB8A4
Air flow	Air supply outlet	1
	Airflow direction control(left & right)	-
	Airflow direction control(up & down)	-
	Auto swing(left & right)	-
	Auto swing(up & down)	-
	Airflow steps(fan/cool/heat)	3 / 3 / 3
	Chaos swing	-
	Chaos wind(auto wind)	-
	Jet cool(Power wind)	-
	Swirl wind	-
Air purifying	Deodorizing filter	X
	Plasma air purifier	X
	Prefilter(washable / anti-fungus)	O
Installation	Drain pump	O
	E.S.P. control	O
	Electric heater(operation)	X
	High ceiling operation	-
Reliability	Hot start	O
	Self diagnosis	O
	Soft dry operation	O
Convenience	Auto changeover	O(Heat recovery)
	Auto cleaning	X
	Auto operation(artificial intelligence)	O(Heat pump or Cooling only)
	Auto restart operation	O
	Child lock	O
	Forced operation	-
	Group control	O
	Sleep mode	X
	Timer(on/off)	O
	Timer(weekly)	O
	Two thermistor control	O
	External On/Off	O
Individual control	Wide wired remote controller (RS2)	PQRCVSL0/PQRCVSL0QW
	Wide wired remote controller (RS2 Plus)	PREMTB001/PREMTBB01
	Premium wired remote controller	PREMTA000/PREMTA000A/PREMTA000B
	Simple wired remote controller	PQRCVCL0Q(W)
	Wired remote controller(for hotel use)	PQRCHCA0Q(W)
	Wireless LCD remote control	PQWRH(C)Q0FDB
Special function kit	Zone control	ABZCA
	CTIE	-
	Electro thermostat	-
	Remote temperature sensor	PQRSTA0
	Group control wire	PZCWRCG3
	Dry contact	PQDSA(1)/PQDSB(1)/PQDSBC/PQDSBNGCM1/PQDSBCGCD0

O : Applied X : Not applied – : No relation

Option : Model name & price are different according to options, and assembled in factory with main unit.

Accessory : Installed at field, ordered and purchased separately by the corresponding model name, supplied with separate package.

2. Specifications

Type			Ceiling Concealed Duct(High Static)
Model		Unit	ARNU28GBGA4
Cooling Capacity		kW	8.2
		kcal/h	7,100
		Btu/h	28,000
Heating Capacity		kW	9.2
		kcal/h	8,000
		Btu/h	31,500
Casing			Galvanized Steel Plate
Dimensions(WxHxD)	Body	mm	1,182 x 298 x 450
		inch	46-17/32 x 11-23/32 x 17-23/32
Coil	Rows x Columns x FPI		3 x 12 x 21
	Face Area	m^2	0.26
Fan	Type		Sirocco Fan
	Motor Output x Number	W	350
	Running Current	A	2.65
	Air Flow Rate(H / M / L)	CMM	25.9 / 24.1 / 21.8
	(High Mode-factory set)	cfm	915 / 851 / 770
	External Static Pressure	mmAq(Pa)	10(98)
	Air Flow Rate(H / M / L)	CMM	25.3 / 21.8 / 17.6
	(Standard Mode)	cfm	893 / 770 / 622
	External Static Pressure	mmAq(Pa)	8(78)
	Drive		Direct
	Motor type		BLDC
Temperature Control			Microprocessor, Thermostat for cooling and heating
Sound Absorbing Thermal Insulation Material			Foamed polystrene
Air Filter			-
Safety Device			Fuse
Pipe Connections	Liquid Side	mm(inch)	Ø9.52(3/8)
	Gas Side	mm(inch)	Ø15.88(5/8)
	Drain Pipe(Internal Dia.)	mm(inch)	25(1)
Net Weight		kg(lbs)	38.0(83.8)
Noise Level(Sound Pressure, 1.5m, H / M / L)		dB(A)	29 / 25 / 23
Power Supply		Ø, V, Hz	1, 220-240, 50
			1, 220, 60
Refrigerant Control			EEV
Transmission cable		mm^2	CVV-SB 1.0~1.5 x 2C

Notes:

1. Capacities are based on the following conditions:
   - Cooling
     - Indoor temp. 27°C[80.6°F]DB/ 19°C[66.2°F]WB
     - Outdoor temp. 35°C[95°F]DB/ 24°C[75.2°F]WB
     - Interconnecting Piping Length 7.5m
     - Level Difference of Zero
   - Heating
     - Indoor temp. 20°C[68°F]DB/ 15°C[59°F]WB
     - Outdoor temp. 7°C[44.6°F]DB/ 6°C[42.8°F]WB
     - Interconnecting Piping Length 7.5m
     - Level Difference of Zero
2. Capacities are net capacities
3. Due to our policy of innovation some specifications may be changed without prior notification
4. Wiring cable size must comply with the applicable local and national codes. And “Electric characteristics” chapter should be considered for electrical work and design. Especially the power cable and circuit breaker should be selected in accordance with that.
5. EEV : Electronic Expansion Valve
6. Sound pressure levels are measured at 50Pa External Static Pressure condition.
7. Anechoic chamber conversion value is measured at 1.5 m downward from unit centre.
   The values depends on the ambient conditions and values are normally higher in actual operation.

Conversion Formula
kcal/h= kW x 860
Btu/h = kW x 3412
cfm = m^3/min x 35.3
l/s = CMM x 1000/60

2. Specifications

Type			Ceiling Concealed Duct(High Static)		
Model		Unit	ARNU36GBGA4	ARNU42GBGA4	ARNU48GBRA4
Cooling Capacity		kW	10.6	12.3	14.1
		kcal/h	9,100	10,600	12,100
		Btu/h	36,200	42,000	48,100
Heating Capacity		kW	11.9	13.8	15.9
		kcal/h	10,200	11,800	13,600
		Btu/h	40,600	47,000	54,200
Casing			Galvanized Steel Plate	Galvanized Steel Plate	Galvanized Steel Plate
Dimensions(WxHxD)	Body	mm	1,182 x 298 x 450	1,182 x 298 x 450	1,230 x 380 x 590
		inch	46-17/32 x 11-23/32 x 17-23/32	46-17/32 x 11-23/32 x 17-23/32	48-7/16 x 14-31/32 x 23-7/32
Coil	Rows x Columns x FPI		3 x 12 x 21	3 x 12 x 21	3 x 13 x 19
	Face Area	m^2	0.26	0.26	0.38
Fan	Type		Sirocco Fan	Sirocco Fan	Sirocco Fan
	Motor Output x Number	W	350	350	185 x 2
	Running Current	A	2.65	2.65	3.5
	Air Flow Rate(H / M / L)	CMM	32.3 / 29.0 / 25.3	34.5 / 32.3 / 30.7	44.8 / 40.6 / 33.3
	(High Mode-factory set)	cfm	1,141 / 1,024 / 894	1,218 / 1,141 / 1,084	1,582 / 1,434 / 1,176
	External Static Pressure	mmAq(Pa)	10(98)	10(98)	14(137)
	Air Flow Rate(H / M / L)	CMM	28.4 / 25.3 / 21.8	32.0 / 28.4 / 27.2	44.4 / 39.5 / 33.5
	(Standard Mode)	cfm	1,003 / 894 / 770	1,130 / 1,003 / 961	1,568 / 1,395 / 1,183
	External Static Pressure	mmAq(Pa)	8(78)	8(78)	10(98)
	Drive		Direct	Direct	Direct
	Motor type		BLDC	BLDC	BLDC
Temperature Control			Microprocessor, Thermostat for cooling and heating	Microprocessor, Thermostat for cooling and heating	Microprocessor, Thermostat for cooling and heating
Sound Absorbing Thermal Insulation Material			Foamed polystrene	Foamed polystrene	Foamed polystrene
Air Filter			-	-	-
Safety Device			Fuse	Fuse	Fuse
Pipe Connections	Liquid Side	mm(inch)	Ø9.52(3/8)	Ø9.52(3/8)	Ø9.52(3/8)
	Gas Side	mm(inch)	Ø15.88(5/8)	Ø15.88(5/8)	Ø15.88(5/8)
	Drain Pipe(Internal Dia.)	mm(inch)	25(1)	25(1)	25(1)
Net Weight		kg(lbs)	38(83.8)	38(83.8)	53(117)
Noise Level(Sound Pressure, 1.5m, H / M / L)		dB(A)	33 / 31 / 28	36 / 33 / 30	38 / 36 / 34
Power Supply		Ø, V, Hz	1, 220-240, 50	1, 220-240, 50	1, 220-240, 50
			1, 220, 60	1, 220, 60	1, 220, 60
Refrigerant Control			EEV	EEV	EEV
Transmission cable		mm^2	CVV-SB 1.0~1.5 x 2C	CVV-SB 1.0~1.5 x 2C	CVV-SB 1.0~1.5 x 2C

Notes:

1. Capacities are based on the following conditions:
   - Cooling
     - Indoor temp. 27°C[80.6°F]DB/ 19°C[66.2°F]WB
     - Outdoor temp. 35°C[95°F]DB/ 24°C[75.2°F]WB
     - Interconnecting Piping Length 7.5m
     - Level Difference of Zero
   - Heating
     - Indoor temp. 20°C[68°F]DB/ 15°C[59°F]WB
     - Outdoor temp. 7°C[44.6°F]DB/ 6°C[42.8°F]WB
     - Interconnecting Piping Length 7.5m
     - Level Difference of Zero
2. Capacities are net capacities
3. Due to our policy of innovation some specifications may be changed without prior notification
4. Wiring cable size must comply with the applicable local and national codes. And “Electric characteristics” chapter should be considered for electrical work and design. Especially the power cable and circuit breaker should be selected in accordance with that.
5. EEV : Electronic Expansion Valve
6. Sound pressure levels are measured at 50Pa External Static Pressure condition.
7. Anechoic chamber conversion value is measured at 1.5 m downward from unit centre.
   The values depends on the ambient conditions and values are normally higher in actual operation.

Conversion Formula
kcal/h= kW x 860
Btu/h = kW x 3412
cfm = m^3/min x 35.3
l/s = CMM x 1000/60

2. Specifications

Type			Ceiling Concealed Duct(High Static)		
Model		Unit	ARNU54GBRA4	ARNU76GB8A4	ARNU96GB8A4
Cooling Capacity		kW	15.8	22.4	28.0
		kcal/h	13,600	19,300	24,100
		Btu/h	54,000	76,400	95,900
Heating Capacity		kW	18.0	25.2	31.5
		kcal/h	15,500	21,700	27,100
		Btu/h	61,400	86,000	107,500
Casing			Galvanized Steel Plate	Galvanized Steel Plate	Galvanized Steel Plate
Dimensions(WxHxD)	Body	mm	1,230 x 380 x 590	1,562 x 460 x 688	1,562 x 460 x 688
		inch	48-7/16 x 14-31/32 x 23-7/32	61-1/2 x 18-1/8 x 27-3/32	61-1/2 x 18-1/8 x 27-3/32
Coil	Rows x Columns x FPI		3 x 13 x 19	3 x 21 x 19	3 x 21 x 19
	Face Area	m^2	0.38	0.59	0.59
Fan	Type		Sirocco Fan	Sirocco Fan	Sirocco Fan
	Motor Output x Number	W	185 x 2	375 x 2	375 x 2
	Running Current	A	3.5	5.2	5.2
	Air Flow Rate(H / M / L)	CMM	51.0 / 44.8 / 40.6	60.0 / 50.0 / 50.0	72.0 / 64.0 / 64.0
	(High Mode-factory set)	cfm	1,801 / 1,582 / 1,434	2,119 / 1,766 / 1,766	2542 / 2,260 / 2,260
	External Static Pressure	mmAq(Pa)	14(137)	22(216)	22(216)
	Air Flow Rate(H / M / L)	CMM	51.5 / 47.5 / 39.5	64.0 / 50.0 / 50.0	76.0 / 64.0 / 64.0
	(Standard Mode)	cfm	1,819 / 1,678 / 1,395	2,260 / 1,766 / 1,766	2,684 / 2,260 / 2,260
	External Static Pressure	mmAq(Pa)	10(98)	15(147)	15(147)
	Drive		Direct	Direct	Direct
	Motor type		BLDC	BLDC	BLDC
Temperature Control			Microprocessor, Thermostat for cooling and heating	Microprocessor, Thermostat for cooling and heating	Microprocessor, Thermostat for cooling and heating
Sound Absorbing Thermal Insulation Material			Foamed polystrene	Foamed polystrene	Foamed polystrene
Air Filter			-	-	-
Safety Device			Fuse	Fuse	Fuse
Pipe Connections	Liquid Side	mm(inch)	Ø9.52(3/8)	Ø9.52(3/8)	Ø9.52(3/8)
	Gas Side	mm(inch)	Ø15.88(5/8)	Ø19.05(3/4)	Ø22.2(7/8)
	Drain Pipe(Internal Dia.)	mm(inch)	25(1)	25(1)	25(1)
Net Weight		kg(lbs)	53(117)	87(192)	87(192)
Noise Level(Sound Pressure, 1.5m, H / M / L)		dB(A)	39 / 37 / 35	45 / 41 / 40	47 / 42 / 41
Power Supply		Ø, V, Hz	1, 220-240, 50	1, 220-240, 50	1, 220-240, 50
			1, 220, 60	1, 220, 60	1, 220, 60
Refrigerant Control			EEV	EEV	EEV
Transmission cable		mm^2	CVV-SB 1.0 ~ 1.5 x 2C	CVV-SB 1.0~1.5 x 2C	CVV-SB 1.0~1.5 x 2C

Notes:

1. Capacities are based on the following conditions:
   - Cooling
     - Indoor temp. 27°C[80.6°F]DB/ 19°C[66.2°F]WB
     - Outdoor temp. 35°C[95°F]DB/ 24°C[75.2°F]WB
     - Interconnecting Piping Length 7.5m
     - Level Difference of Zero
   - Heating
     - Indoor temp. 20°C[68°F]DB/ 15°C[59°F]WB
     - Outdoor temp. 7°C[44.6°F]DB/ 6°C[42.8°F]WB
     - Interconnecting Piping Length 7.5m
     - Level Difference of Zero
2. Capacities are net capacities
3. Due to our policy of innovation some specifications may be changed without prior notification
4. Wiring cable size must comply with the applicable local and national codes. And “Electric characteristics” chapter should be considered for electrical work and design. Especially the power cable and circuit breaker should be selected in accordance with that.
5. EEV : Electronic Expansion Valve
6. Sound pressure levels are measured at External Static Pressure condition like below.
   - ARNU54GBRA4 : 50Pa
   - ARNU76GB8A4 / ARNU96GB8A4 (H/M/L) : 220Pa / 150Pa / 120Pa
7. Anechoic chamber conversion value is measured at 1.5 m downward from unit centre.
   The values depends on the ambient conditions and values are normally higher in actual operation.

Conversion Formula
kcal/h= kW x 860
Btu/h = kW x 3412
cfm = m^3/min x 35.3
l/s = CMM x 1000/60

3. Dimensions & Gravity point

Ceiling Concealed Duct (High Static)

ARNU28GBGA4
ARNU36GBGA4
ARNU42GBGA4

(unit : mm)

Number	Name	Description
1	Liquid pipe connection	Unit size(28k,36k,42k):ø9.52
2	Gas pipe connection	Unit size(28k,36k,42k):ø15.88
3	Drain pipe connection	
4	Power supply connection	
5	Air discharge	
6	Air suction	

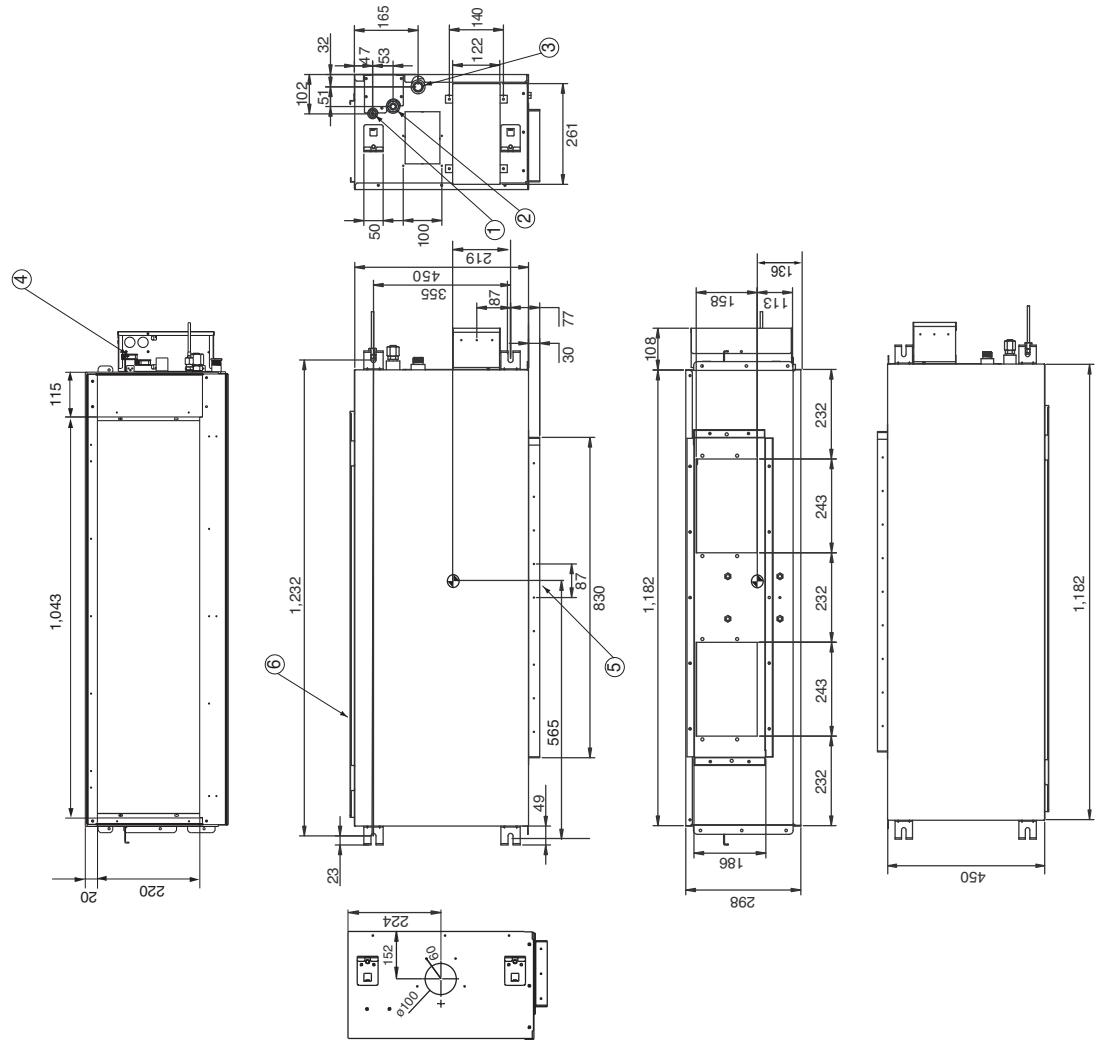

▣ Note

1. Unit should be installed in compliance with the installation manual in the product box.
2. Unit shall be grounded in accordance with the local regulations or applicable national codes.

⊕ Gravity point

LG Electronics

CHASSIS CODE: BG

Indoor Units

3. Dimensions & Gravity point

Ceiling Concealed Duct (High Static)

ARNU48GBRA4
ARNU54GBRA4

(unit : mm)

Number	Name	Description
1	Liquid pipe connection	Unit size(48k):ø9.52
2	Gas pipe connection	Unit size(48k):ø15.88
3	Drain pipe connection	
4	Power supply connection	
5	Air discharge	
6	Air suction	

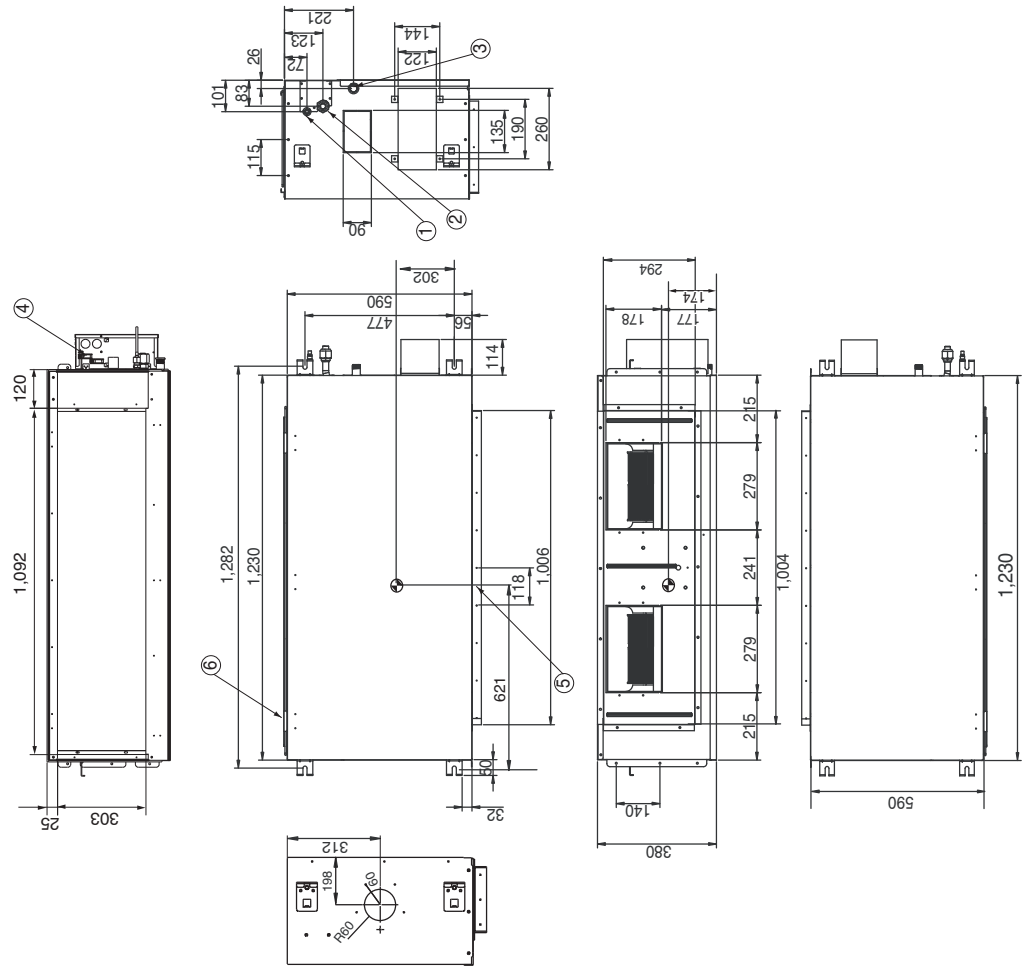

▣ Note

1. Unit should be installed in compliance with the installation manual in the product box.
2. Unit shall be grounded in accordance with the local regulations or applicable national codes.

◍ Gravity point

LG Electronics

CHASSIS CODE: BR

3. Dimensions & Gravity point

Ceiling Concealed Duct (High Static)

ARNU76GB8A4
ARNU96GB8A4

(unit : mm)

Number	Name	Description
1	Liquid pipe connection	Unit size(76k,96k):ø9.52
2	Gas pipe connection	Unit size(76k):ø19.05 Unit size(96k):ø22.2
3	Drain pipe connection	
4	Power supply connection	
5	Air discharge	
6	Air suction	

▣ Note

1. Unit should be installed in compliance with the installation manual in the product box.
2. Unit shall be grounded in accordance with the local regulations or applicable national codes.

◔ Gravity point

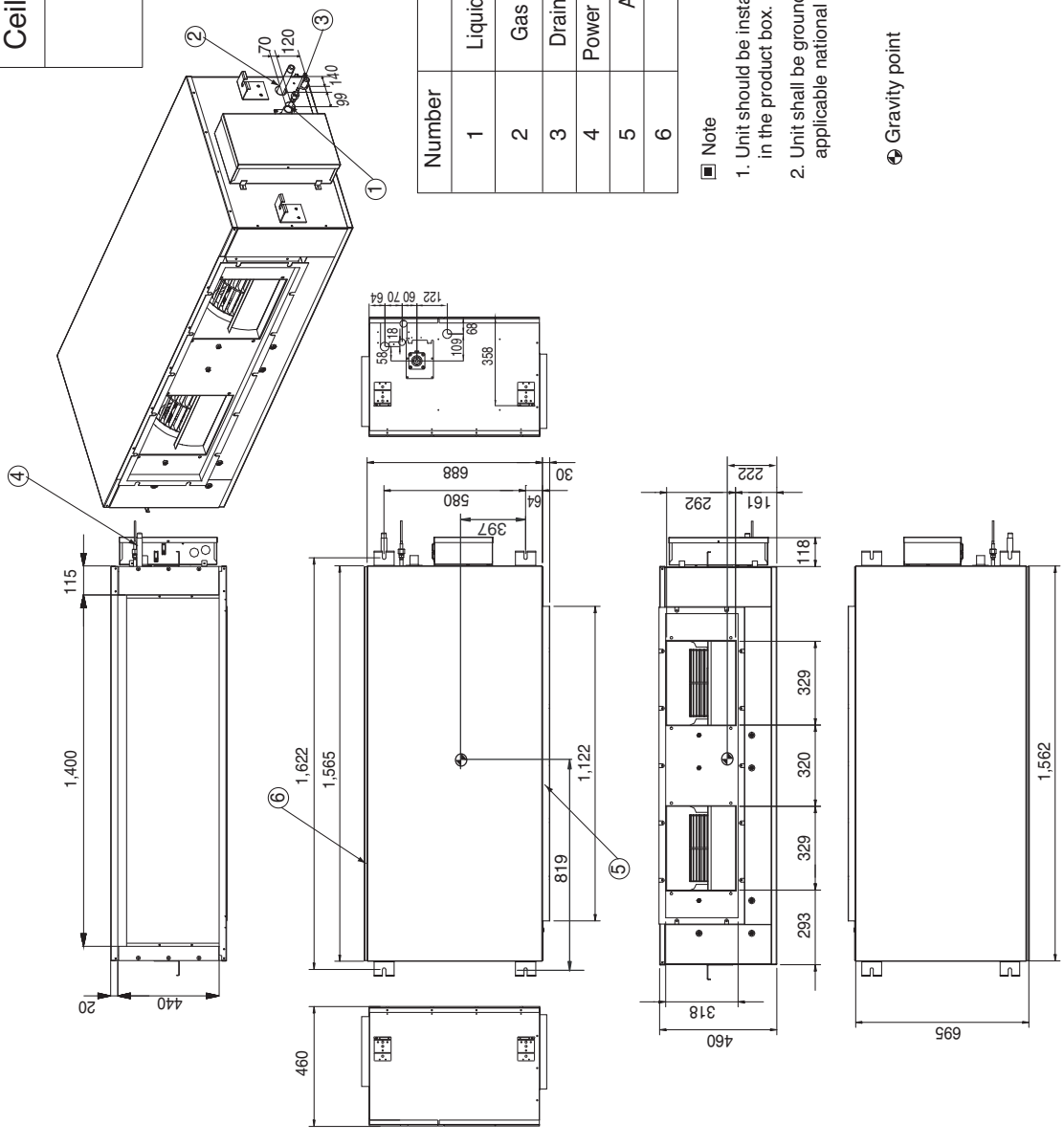

LG Electronics

CHASSIS CODE: B8

4. Piping Diagrams

BG, BR Chassis

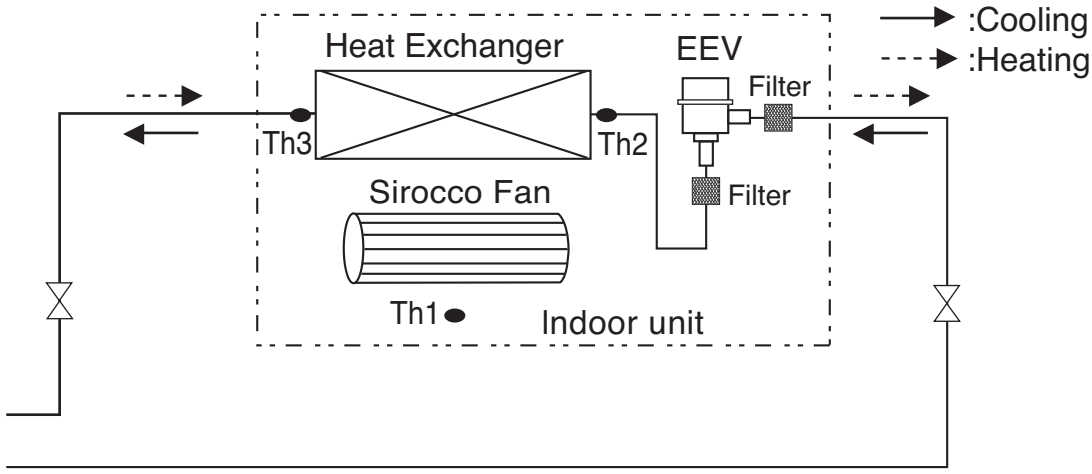

Refrigerant pipe connection port diameter

[Unit: mm(inch)]

MODEL	GAS	LIQUID
ARNU28GBGA4	Ø15.88(5/8)	Ø9.52(3/8)
ARNU36GBGA4	Ø15.88(5/8)	Ø9.52(3/8)
ARNU42GBGA4	Ø15.88(5/8)	Ø9.52(3/8)
ARNU48GBRA4	Ø15.88(5/8)	Ø9.52(3/8)
ARNU54GBRA4	Ø15.88(5/8)	Ø9.52(3/8)

LOC.	Description	PCB Connector (Color)
Th1	Thermistor for room air temperature	CN-ROOM (Yellow)
Th2	Thermistor for pipe in temperature	CN-PIPE_IN (White)
Th3	Thermistor for pipe out temperature	CN-PIPE_OUT (Red)

4. Piping Diagrams

B8 Chassis

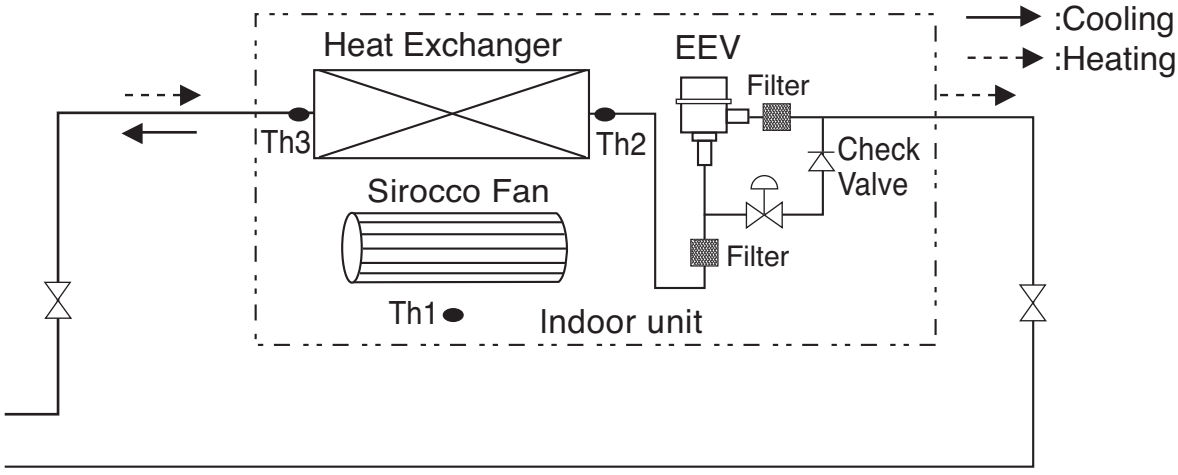

Refrigerant pipe connection port diameter

[Unit: mm(inch)]

MODEL	GAS	LIQUID
ARNU76GB8A4	Ø19.05(3/4)	Ø9.52(3/8)
ARNU96GB8A4	Ø22.2(7/8)	Ø9.52(3/8)

LOC.	Description	PCB Connector (Color)
Th1	Thermistor for room air temperature	CN-ROOM (Yellow)
Th2	Thermistor for pipe in temperature	CN-PIPE_IN (White)
Th3	Thermistor for pipe out temperature	CN-PIPE_OUT (Red)

5. Wiring Diagrams

BG Chassis

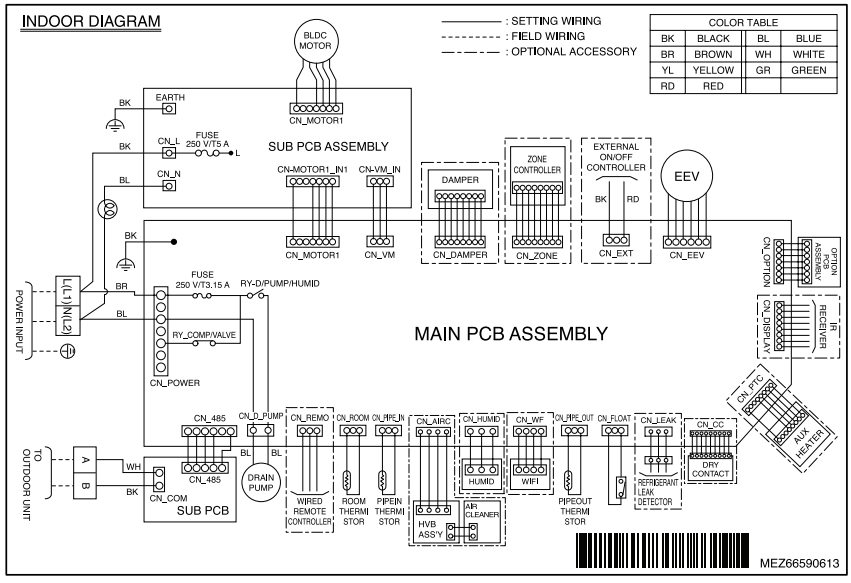

CONNECTOR NUMBER	LOCATION POINT	FUNCTION
CN-POWER	AC Power supply	AC Power line input for indoor controller
CN-MOTOR1	Fan motor output	Motor output of BLDC
CN-MOTOR2	Fan motor output	Motor output of BLDC
CN-D_PUMP	Drain pump output	AC output for drain pump
CN-COM	Communication	Connection between indoor and outdoor
CN-EEV	EEV Output	EEV Control output
CN-FLOAT	Float switch input	Float switch sensing
CN-PIPE_IN	Suction pipe sensor	Pipe in thermistor
CN-PIPE_OUT	Discharge pipe sensor	Pipe out thermistor
CN-ROOM	Room sensor	Room air thermistor
CN-REMO	Remote controller	Remote control line
CN-ZONE	Zontroller	Zone control line
CN-DISPLAY	RF Remote controller	RF Remote control line
CN-CC	Dry contact	Dry contact line
CN-EXT	External On/Off	External On/Off signal input

	Function	Description	Setting Off	Setting On	Default
SW1	Communication	N/A (Default)	-	-	Off
SW2	Cycle	N/A (Default)	-	-	Off
SW3	Group Control	Selection of Master or Slave	Master	Slave	Off
SW4	Dry Contact Mode	Selection of Dry Contact Mode	Wired/Wireless remote controller selection of Manual or Auto operation Mode	Auto	Off
SW5	Installation	Fan continuous operation	Continuous operation Removal	-	Off
SW6	Heater linkage	N/A	-	-	Off
SW7	Ventilator linkage	Selection of Ventilator linkage	Linkage Removal	Working	Off
	Vane selection (Console)	Selection of up/down side Vane	Up side + Down side Vane	Up side Vane Only	
	Region selection	Selection tropical region	General model	Tropical model	
SW8	Etc.	Spare	-	-	Off

⚠ CAUTION

For Multi V Models, DIP switch 1, 2, 6, 8 must be set OFF.

5. Wiring Diagrams

BR Chassis

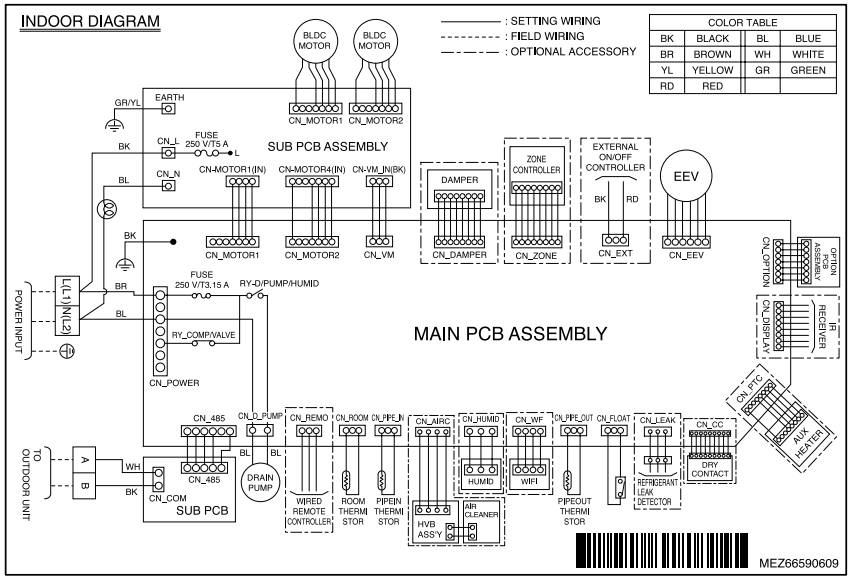

CONNECTOR NUMBER	LOCATION POINT	FUNCTION
CN-POWER	AC Power supply	AC Power line input for indoor controller
CN-MOTOR1	Fan motor output	Motor output of BLDC
CN-MOTOR2	Fan motor output	Motor output of BLDC
CN-D_PUMP	Drain pump output	AC output for drain pump
CN-COM	Communication	Connection between indoor and outdoor
CN-EEV	EEV Output	EEV Control output
CN-FLOAT	Float switch input	Float switch sensing
CN-PIPE_IN	Suction pipe sensor	Pipe in thermistor
CN-PIPE_OUT	Discharge pipe sensor	Pipe out thermistor
CN-ROOM	Room sensor	Room air thermistor
CN-REMO	Remote controller	Remote control line
CN-ZONE	Zontroller	Zone control line
CN-DISPLAY	RF Remote controller	RF Remote control line
CN-CC	Dry contact	Dry contact line
CN-EXT	External On/Off	External On/Off signal input

	Function	Description	Setting Off	Setting On	Default
SW1	Communication	N/A (Default)	-	-	Off
SW2	Cycle	N/A (Default)	-	-	Off
SW3	Group Control	Selection of Master or Slave	Master	Slave	Off
SW4	Dry Contact Mode	Selection of Dry Contact Mode	Wired/Wireless remote controller selection of Manual or Auto operation Mode	Auto	Off
SW5	Installation	Fan continuous operation	Continuous operation Removal	-	Off
SW6	Heater linkage	N/A	-	-	Off
SW7	Ventilator linkage	Selection of Ventilator linkage	Linkage Removal	Working	Off
	Vane selection (Console)	Selection of up/down side Vane	Up side + Down side Vane	Up side Vane Only	
	Region selection	Selection tropical region	General model	Tropical model	
SW8	Etc.	Spare	-	-	Off

⚠ CAUTION

For Multi V Models, DIP switch 1, 2, 6, 8 must be set OFF.

5. Wiring Diagrams

B8 Chassis

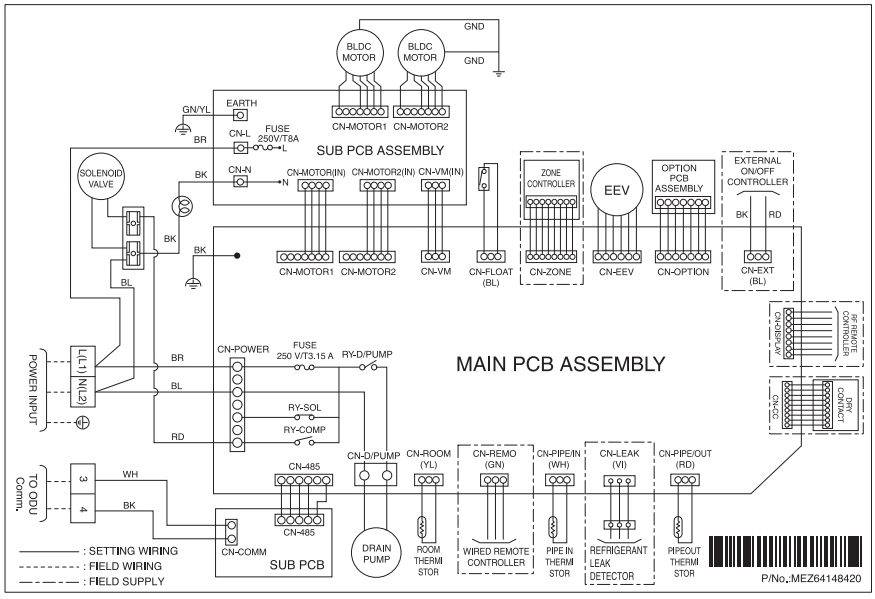

CONNECTOR NUMBER	LOCATION POINT	FUNCTION
CN-POWER	AC Power supply	AC Power line input for indoor controller
CN-MOTOR1, CN-MOTOR2	Fan motor output	Motor output of BLDC
CN-D/PUMP	Drain pump output	AC Output for drain pump
CN-COM	Communication	Connection between indoor and outdoor
CN-EEV	EEV Output	EEV Control output
CN-FLOAT	Float switch input	Float switch sensing
CN-PIPE/IN	Suction pipe sensor	Pipe in thermistor
CN-PIPE/OUT	Discharge pipe sensor	Pipe out thermistor
CN-ROOM	Room sensor	Room thermistor
CN-REMO	Remote controller	Remote control line
CN-CC	Dry contact	Dry contact line
CN-DISPLAY	RF Remocon	RF Remocon receiver
CN-OPTION	Option PCB	Option PCB connector
CN-ZONE	Zone controller	Zone controller line
CN-EXT	External On/Off	External On/Off signal input

	Function	Description	Setting Off	Setting On	Default
SW1	Communication	N/A (Default)	-	-	Off
SW2	Cycle	N/A (Default)	-	-	Off
SW3	Group Control	Selection of Master or Slave	Master	Slave	Off
SW4	Dry Contact Mode	Selection of Dry Contact Mode	Wired/Wireless remote controller selection of Manual or Auto operation Mode	Auto	Off
SW5	Installation	Fan continuous operation	Continuous operation Removal	-	Off
SW6	Heater linkage	N/A	-	-	Off
SW7	Ventilator linkage	Selection of Ventilator linkage	Linkage Removal	Working	Off
	Vane selection (Console)	Selection of up/down side Vane	Up side + Down side Vane	Up side Vane Only	
	Region selection	Selection tropical region	General model	Tropical model	
SW8	Etc.	Spare	-	-	Off

⚠ CAUTION

For Multi V Models, DIP switch 1, 2, 6, 8 must be set OFF.

6. Capacity Tables

6.1 Cooling Capacity

Cooling capacity

Capacity Index	Outdoor air temp. (DB, °C)	Indoor air temp. (DB/WB, °C)													
		20		23		26		27		28		30		32	
		14		16		18		19		20		22		24	
		TC	SHC	TC	SHC	TC	SHC	TC	SHC	TC	SHC	TC	SHC	TC	SHC
		kW	kW	kW	kW	kW	kW	kW	kW	kW	kW	kW	kW	kW	kW
8.2	10	5.5	5.0	6.6	5.5	7.7	6.0	8.2	6.1	8.7	6.2	9.8	6.5	10.8	6.5
	12	5.5	5.0	6.6	5.5	7.7	6.0	8.2	6.1	8.7	6.2	9.8	6.5	10.6	6.4
	14	5.5	5.0	6.6	5.5	7.7	6.0	8.2	6.1	8.7	6.2	9.8	6.5	10.5	6.3
	16	5.5	5.0	6.6	5.5	7.7	6.0	8.2	6.1	8.7	6.2	9.8	6.5	10.4	6.2
	18	5.5	5.0	6.6	5.5	7.7	6.0	8.2	6.1	8.7	6.2	9.8	6.5	10.2	6.1
	20	5.5	5.0	6.6	5.5	7.7	6.0	8.2	6.1	8.7	6.2	9.8	6.5	10.1	6.0
	21	5.5	5.0	6.6	5.5	7.7	6.0	8.2	6.1	8.7	6.2	9.8	6.5	10.0	6.0
	23	5.5	5.0	6.6	5.5	7.7	6.0	8.2	6.1	8.7	6.2	9.8	6.5	9.9	5.9
	25	5.5	5.0	6.6	5.5	7.7	6.0	8.2	6.1	8.7	6.2	9.7	6.4	9.7	5.8
	27	5.5	5.0	6.6	5.5	7.7	6.0	8.2	6.1	8.7	6.2	9.4	6.3	9.6	5.8
	29	5.5	5.0	6.6	5.5	7.7	6.0	8.2	6.1	8.7	6.2	9.3	6.2	9.5	5.7
	31	5.5	5.0	6.6	5.5	7.7	6.0	8.2	6.1	8.7	6.2	9.2	6.1	9.3	5.6
	33	5.5	5.0	6.6	5.5	7.7	6.0	8.2	6.1	8.7	6.2	9.0	6.0	9.2	5.5
	35	5.5	5.0	6.6	5.5	7.7	6.0	8.2	6.1	8.7	6.2	8.9	5.9	9.0	5.4
	37	5.5	5.0	6.6	5.5	7.7	6.0	8.2	6.1	8.5	6.1	8.7	5.8	8.9	5.3
	39	5.5	5.0	6.6	5.5	7.7	6.0	8.2	6.1	8.4	6.0	8.5	5.7	8.8	5.3
10.6	10	7.2	6.4	8.5	7.1	9.9	7.7	10.6	7.8	11.3	8.1	12.7	8.4	13.9	8.4
	12	7.2	6.4	8.5	7.1	9.9	7.7	10.6	7.8	11.3	8.1	12.7	8.4	13.7	8.2
	14	7.2	6.4	8.5	7.1	9.9	7.7	10.6	7.8	11.3	8.1	12.7	8.4	13.6	8.2
	16	7.2	6.4	8.5	7.1	9.9	7.7	10.6	7.8	11.3	8.1	12.7	8.4	13.4	8.0
	18	7.2	6.4	8.5	7.1	9.9	7.7	10.6	7.8	11.3	8.1	12.7	8.4	13.2	7.9
	20	7.2	6.4	8.5	7.1	9.9	7.7	10.6	7.8	11.3	8.1	12.7	8.4	13.0	7.8
	21	7.2	6.4	8.5	7.1	9.9	7.7	10.6	7.8	11.3	8.1	12.7	8.4	12.9	7.8
	23	7.2	6.4	8.5	7.1	9.9	7.7	10.6	7.8	11.3	8.1	12.7	8.4	12.8	7.7
	25	7.2	6.4	8.5	7.1	9.9	7.7	10.6	7.8	11.3	8.1	12.5	8.3	12.6	7.5
	27	7.2	6.4	8.5	7.1	9.9	7.7	10.6	7.8	11.3	8.1	12.2	8.1	12.4	7.5
	29	7.2	6.4	8.5	7.1	9.9	7.7	10.6	7.8	11.3	8.1	12.1	8.0	12.2	7.3
	31	7.2	6.4	8.5	7.1	9.9	7.7	10.6	7.8	11.3	8.1	11.9	7.9	12.0	7.2
	33	7.2	6.4	8.5	7.1	9.9	7.7	10.6	7.8	11.3	8.1	11.7	7.8	11.8	7.1
	35	7.2	6.4	8.5	7.1	9.9	7.7	10.6	7.8	11.3	8.1	11.4	7.6	11.7	7.0
	37	7.2	6.4	8.5	7.1	9.9	7.7	10.6	7.8	11.0	7.9	11.2	7.5	11.5	6.9
	39	7.2	6.4	8.5	7.1	9.9	7.7	10.6	7.8	10.8	7.7	11.0	7.3	11.3	6.8
12.3	10	8.3	7.5	9.9	8.3	11.5	9.0	12.3	9.1	13.1	9.4	14.7	9.8	16.2	9.7
	12	8.3	7.5	9.9	8.3	11.5	9.0	12.3	9.1	13.1	9.4	14.7	9.8	15.9	9.6
	14	8.3	7.5	9.9	8.3	11.5	9.0	12.3	9.1	13.1	9.4	14.7	9.8	15.8	9.5
	16	8.3	7.5	9.9	8.3	11.5	9.0	12.3	9.1	13.1	9.4	14.7	9.8	15.6	9.3
	18	8.3	7.5	9.9	8.3	11.5	9.0	12.3	9.1	13.1	9.4	14.7	9.8	15.3	9.2
	20	8.3	7.5	9.9	8.3	11.5	9.0	12.3	9.1	13.1	9.4	14.7	9.8	15.1	9.1
	21	8.3	7.5	9.9	8.3	11.5	9.0	12.3	9.1	13.1	9.4	14.7	9.8	15.0	9.0
	23	8.3	7.5	9.9	8.3	11.5	9.0	12.3	9.1	13.1	9.4	14.7	9.8	14.8	8.9
	25	8.3	7.5	9.9	8.3	11.5	9.0	12.3	9.1	13.1	9.4	14.5	9.7	14.6	8.8
	27	8.3	7.5	9.9	8.3	11.5	9.0	12.3	9.1	13.1	9.4	14.1	9.4	14.4	8.6
	29	8.3	7.5	9.9	8.3	11.5	9.0	12.3	9.1	13.1	9.4	14.0	9.3	14.2	8.5
	31	8.3	7.5	9.9	8.3	11.5	9.0	12.3	9.1	13.1	9.4	13.8	9.2	14.0	8.4
	33	8.3	7.5	9.9	8.3	11.5	9.0	12.3	9.1	13.1	9.4	13.5	9.0	13.7	8.3
	35	8.3	7.5	9.9	8.3	11.5	9.0	12.3	9.1	13.1	9.4	13.3	8.8	13.5	8.1
	37	8.3	7.5	9.9	8.3	11.5	9.0	12.3	9.1	12.8	9.2	13.0	8.7	13.4	8.0
	39	8.3	7.5	9.9	8.3	11.5	9.0	12.3	9.1	12.5	9.0	12.8	8.5	13.1	7.9

Notes:

TC: Total Capacity(kW)

SHC: Sensible Heat Capacity(kW)

1. Capacity tables show the representative value of conditions which may occur.
2. Refer to Capacity Correction Factor in the outdoor unit PDB for the actual performance data of each indoor unit and outdoor unit combination.

6. Capacity Tables

Cooling capacity

Capacity Index	Outdoor air temp. (DB, °C)	Indoor air temp. (DB/WB, °C)													
		20		23		26		27		28		30		32	
		14		16		18		19		20		22		24	
		TC	SHC	TC	SHC	TC	SHC	TC	SHC	TC	SHC	TC	SHC	TC	SHC
		kW	kW	kW	kW	kW	kW	kW	kW	kW	kW	kW	kW	kW	kW
14.1	10	9.5	8.7	11.3	9.6	13.2	10.4	14.1	10.6	15.0	10.9	16.9	11.4	18.5	11.3
	12	9.5	8.7	11.3	9.6	13.2	10.4	14.1	10.6	15.0	10.9	16.9	11.4	18.3	11.1
	14	9.5	8.7	11.3	9.6	13.2	10.4	14.1	10.6	15.0	10.9	16.9	11.4	18.1	11.0
	16	9.5	8.7	11.3	9.6	13.2	10.4	14.1	10.6	15.0	10.9	16.9	11.4	17.8	10.8
	18	9.5	8.7	11.3	9.6	13.2	10.4	14.1	10.6	15.0	10.9	16.9	11.4	17.6	10.7
	20	9.5	8.7	11.3	9.6	13.2	10.4	14.1	10.6	15.0	10.9	16.9	11.4	17.3	10.5
	21	9.5	8.7	11.3	9.6	13.2	10.4	14.1	10.6	15.0	10.9	16.9	11.4	17.2	10.5
	23	9.5	8.7	11.3	9.6	13.2	10.4	14.1	10.6	15.0	10.9	16.9	11.4	17.0	10.3
	25	9.5	8.7	11.3	9.6	13.2	10.4	14.1	10.6	15.0	10.9	16.6	11.2	16.7	10.2
	27	9.5	8.7	11.3	9.6	13.2	10.4	14.1	10.6	15.0	10.9	16.2	10.9	16.5	10.0
	29	9.5	8.7	11.3	9.6	13.2	10.4	14.1	10.6	15.0	10.9	16.1	10.8	16.3	9.9
	31	9.5	8.7	11.3	9.6	13.2	10.4	14.1	10.6	15.0	10.9	15.8	10.7	16.0	9.7
	33	9.5	8.7	11.3	9.6	13.2	10.4	14.1	10.6	15.0	10.9	15.5	10.5	15.8	9.6
	35	9.5	8.7	11.3	9.6	13.2	10.4	14.1	10.6	15.0	10.9	15.2	10.3	15.5	9.4
	37	9.5	8.7	11.3	9.6	13.2	10.4	14.1	10.6	14.7	10.6	14.9	10.1	15.3	9.3
	39	9.5	8.7	11.3	9.6	13.2	10.4	14.1	10.6	14.4	10.4	14.7	9.9	15.1	9.2
15.8	10	10.7	10.1	12.7	11.1	14.7	12.1	15.8	12.3	16.9	12.8	18.9	13.3	20.7	13.0
	12	10.7	10.1	12.7	11.1	14.7	12.1	15.8	12.3	16.9	12.8	18.9	13.3	20.5	13.0
	14	10.7	10.1	12.7	11.1	14.7	12.1	15.8	12.3	16.9	12.8	18.9	13.3	20.3	12.8
	16	10.7	10.1	12.7	11.1	14.7	12.1	15.8	12.3	16.9	12.8	18.9	13.3	20.0	12.6
	18	10.7	10.1	12.7	11.1	14.7	12.1	15.8	12.3	16.9	12.8	18.9	13.3	19.6	12.6
	20	10.7	10.1	12.7	11.1	14.7	12.1	15.8	12.3	16.9	12.8	18.9	13.3	19.4	12.3
	21	10.7	10.1	12.7	11.1	14.7	12.1	15.8	12.3	16.9	12.8	18.9	13.3	19.4	12.3
	23	10.7	10.1	12.7	11.1	14.7	12.1	15.8	12.3	16.9	12.8	18.9	13.3	18.9	12.1
	25	10.7	10.1	12.7	11.1	14.7	12.1	15.8	12.3	16.9	12.8	18.7	13.0	18.7	11.8
	27	10.7	10.1	12.7	11.1	14.7	12.1	15.8	12.3	16.9	12.8	18.2	12.8	18.5	11.8
	29	10.7	10.1	12.7	11.1	14.7	12.1	15.8	12.3	16.9	12.8	18.0	12.6	18.2	11.6
	31	10.7	10.1	12.7	11.1	14.7	12.1	15.8	12.3	16.9	12.8	17.8	12.3	18.0	11.4
	33	10.7	10.1	12.7	11.1	14.7	12.1	15.8	12.3	16.9	12.8	17.4	12.3	17.6	11.1
	35	10.7	10.1	12.7	11.1	14.7	12.1	15.8	12.3	16.9	12.8	17.1	12.1	17.4	11.1
	37	10.7	10.1	12.7	11.1	14.7	12.1	15.8	12.3	16.5	12.3	16.7	11.8	17.1	10.9
	39	10.7	10.1	12.7	11.1	14.7	12.1	15.8	12.3	16.0	12.1	16.5	11.6	16.9	10.6
22.4	10	15.1	12.9	18.0	14.2	20.8	15.4	22.4	15.7	24.0	16.3	26.8	16.9	29.3	16.6
	12	15.1	12.9	18.0	14.2	20.8	15.4	22.4	15.7	24.0	16.3	26.8	16.9	29.0	16.6
	14	15.1	12.9	18.0	14.2	20.8	15.4	22.4	15.7	24.0	16.3	26.8	16.9	28.7	16.3
	16	15.1	12.9	18.0	14.2	20.8	15.4	22.4	15.7	24.0	16.3	26.8	16.9	28.4	16.0
	18	15.1	12.9	18.0	14.2	20.8	15.4	22.4	15.7	24.0	16.3	26.8	16.9	27.8	16.0
	20	15.1	12.9	18.0	14.2	20.8	15.4	22.4	15.7	24.0	16.3	26.8	16.9	27.4	15.7
	21	15.1	12.9	18.0	14.2	20.8	15.4	22.4	15.7	24.0	16.3	26.8	16.9	27.4	15.7
	23	15.1	12.9	18.0	14.2	20.8	15.4	22.4	15.7	24.0	16.3	26.8	16.9	26.8	15.4
	25	15.1	12.9	18.0	14.2	20.8	15.4	22.4	15.7	24.0	16.3	26.5	16.6	26.5	15.1
	27	15.1	12.9	18.0	14.2	20.8	15.4	22.4	15.7	24.0	16.3	25.9	16.3	26.2	15.1
	29	15.1	12.9	18.0	14.2	20.8	15.4	22.4	15.7	24.0	16.3	25.6	16.0	25.9	14.8
	31	15.1	12.9	18.0	14.2	20.8	15.4	22.4	15.7	24.0	16.3	25.2	15.7	25.6	14.5
	33	15.1	12.9	18.0	14.2	20.8	15.4	22.4	15.7	24.0	16.3	24.6	15.7	24.9	14.2
	35	15.1	12.9	18.0	14.2	20.8	15.4	22.4	15.7	24.0	16.3	24.3	15.4	24.6	14.2
	37	15.1	12.9	18.0	14.2	20.8	15.4	22.4	15.7	23.3	15.7	23.7	15.1	24.3	13.9
	39	15.1	12.9	18.0	14.2	20.8	15.4	22.4	15.7	22.7	15.4	23.3	14.8	24.0	13.5

Notes:

TC: Total Capacity(kW)

SHC: Sensible Heat Capacity(kW)

1. Capacity tables show the representative value of conditions which may occur.
2. Refer to Capacity Correction Factor in the outdoor unit PDB for the actual performance data of each indoor unit and outdoor unit combination.

6. Capacity Tables

Cooling capacity

Capacity Index	Outdoor air temp. (DB, °C)	Indoor air temp. (DB/WB, °C)													
		20		23		26		27		28		30		32	
		14		16		18		19		20		22		24	
		TC	SHC	TC	SHC	TC	SHC	TC	SHC	TC	SHC	TC	SHC	TC	SHC
		kW	kW	kW	kW	kW	kW	kW	kW	kW	kW	kW	kW	kW	kW
28.0	10	18.9	16.1	22.5	17.7	26.0	19.2	28.0	19.6	30.0	20.4	33.5	21.1	36.7	20.8
	12	18.9	16.1	22.5	17.7	26.0	19.2	28.0	19.6	30.0	20.4	33.5	21.1	36.3	20.8
	14	18.9	16.1	22.5	17.7	26.0	19.2	28.0	19.6	30.0	20.4	33.5	21.1	35.9	20.4
	16	18.9	16.1	22.5	17.7	26.0	19.2	28.0	19.6	30.0	20.4	33.5	21.1	35.5	20.0
	18	18.9	16.1	22.5	17.7	26.0	19.2	28.0	19.6	30.0	20.4	33.5	21.1	34.7	20.0
	20	18.9	16.1	22.5	17.7	26.0	19.2	28.0	19.6	30.0	20.4	33.5	21.1	34.3	19.6
	21	18.9	16.1	22.5	17.7	26.0	19.2	28.0	19.6	30.0	20.4	33.5	21.1	34.3	19.6
	23	18.9	16.1	22.5	17.7	26.0	19.2	28.0	19.6	30.0	20.4	33.5	21.1	33.5	19.2
	25	18.9	16.1	22.5	17.7	26.0	19.2	28.0	19.6	30.0	20.4	33.1	20.8	33.1	18.8
	27	18.9	16.1	22.5	17.7	26.0	19.2	28.0	19.6	30.0	20.4	32.3	20.4	32.7	18.8
	29	18.9	16.1	22.5	17.7	26.0	19.2	28.0	19.6	30.0	20.4	31.9	20.0	32.3	18.4
	31	18.9	16.1	22.5	17.7	26.0	19.2	28.0	19.6	30.0	20.4	31.5	19.6	31.9	18.1
	33	18.9	16.1	22.5	17.7	26.0	19.2	28.0	19.6	30.0	20.4	30.8	19.6	31.2	17.7
	35	18.9	16.1	22.5	17.7	26.0	19.2	28.0	19.6	30.0	20.4	30.4	19.2	30.8	17.7
	37	18.9	16.1	22.5	17.7	26.0	19.2	28.0	19.6	29.2	19.6	29.6	18.8	30.4	17.3
	39	18.9	16.1	22.5	17.7	26.0	19.2	28.0	19.6	28.4	19.2	29.2	18.4	30.0	16.9

Notes:
TC: Total Capacity(kW)
SHC: Sensible Heat Capacity(kW)
1. Capacity tables show the representative value of conditions which may occur.
2. Refer to Capacity Correction Factor in the outdoor unit PDB for the actual performance data of each indoor unit and outdoor unit combination.

6. Capacity Tables

6.2 Heating Capacity

Heating capacity

Capacity Index	Outdoor air temp.		Indoor air temp. (DB, °C)					
			16	18	20	21	22	24
	DB(°C)	WB(°C)	TC	TC	TC	TC	TC	TC
			kW	kW	kW	kW	kW	kW
8.2	-24.8	-25.0	5.3	5.3	5.3	5.3	5.3	5.3
	-21.8	-22.0	6.4	6.4	6.4	6.4	6.4	6.4
	-19.8	-20.0	6.8	6.8	6.7	6.7	6.7	6.7
	-18.8	-19.0	6.9	6.9	6.9	6.9	6.9	6.9
	-16.7	-17.0	7.2	6.9	7.2	7.2	7.2	7.2
	-14.7	-15.0	7.6	6.9	7.6	7.6	7.6	7.5
	-12.6	-13.0	8.0	6.9	7.9	7.9	7.9	7.9
	-10.5	-11.0	8.3	6.9	8.3	8.3	8.3	8.0
	-9.5	-10.0	8.5	6.9	8.4	8.4	8.4	8.0
	-8.5	-9.1	8.6	6.9	8.6	8.6	8.6	8.0
	-7.0	-7.6	8.9	6.9	8.9	8.8	8.6	8.0
	-5.0	-5.6	9.2	6.9	9.2	8.9	8.6	8.0
	-3.0	-3.7	9.7	6.9	9.2	8.9	8.6	8.0
	0.0	-0.7	9.8	6.9	9.2	8.9	8.6	8.0
	3.0	2.2	10.1	6.9	9.2	8.9	8.6	8.0
	5.0	4.1	10.3	6.9	9.2	8.9	8.6	8.0
	7.0	6.0	10.4	6.9	9.2	8.9	8.6	8.0
	9.0	7.9	10.4	6.9	9.2	8.9	8.6	8.0
	11.0	9.8	10.4	6.9	9.2	8.9	8.6	8.0
	13.0	11.8	10.4	6.9	9.2	8.9	8.6	8.0
	15.0	13.7	10.4	6.9	9.2	8.9	8.6	8.0
10.6	-24.8	-25.0	6.9	6.9	6.8	6.8	6.8	6.8
	-21.8	-22.0	8.3	8.3	8.3	8.3	8.3	8.2
	-19.8	-20.0	8.8	8.8	8.7	8.7	8.7	8.6
	-18.8	-19.0	9.0	8.9	8.9	8.9	8.9	8.9
	-16.7	-17.0	9.4	9.4	9.4	9.3	9.3	9.3
	-14.7	-15.0	9.9	9.9	9.8	9.8	9.8	9.8
	-12.6	-13.0	10.3	10.3	10.3	10.3	10.2	10.2
	-10.5	-11.0	10.8	10.8	10.7	10.7	10.7	10.4
	-9.5	-10.0	11.0	11.0	10.9	10.9	10.9	10.4
	-8.5	-9.1	11.2	11.2	11.1	11.1	11.1	10.4
	-7.0	-7.6	11.5	11.5	11.5	11.4	11.1	10.4
	-5.0	-5.6	12.0	11.9	11.9	11.5	11.1	10.4
	-3.0	-3.7	12.5	12.2	11.9	11.5	11.1	10.4
	0.0	-0.7	12.7	12.3	11.9	11.5	11.1	10.4
	3.0	2.2	13.1	12.7	11.9	11.5	11.1	10.4
	5.0	4.1	13.3	12.7	11.9	11.5	11.1	10.4
	7.0	6.0	13.4	12.7	11.9	11.5	11.1	10.4
	9.0	7.9	13.4	12.7	11.9	11.5	11.1	10.4
	11.0	9.8	13.4	12.7	11.9	11.5	11.1	10.4
	13.0	11.8	13.4	12.7	11.9	11.5	11.1	10.4
	15.0	13.7	13.4	12.7	11.9	11.5	11.1	10.4
12.3	-24.8	-25.0	8.0	8.0	7.9	7.9	7.9	7.9
	-21.8	-22.0	9.7	9.7	9.6	9.6	9.6	9.5
	-19.8	-20.0	10.2	10.2	10.1	10.1	10.1	10.0
	-18.8	-19.0	10.4	10.3	10.3	10.3	10.3	10.3
	-16.7	-17.0	10.9	10.9	10.9	10.8	10.8	10.8
	-14.7	-15.0	11.4	11.4	11.4	11.4	11.4	11.3
	-12.6	-13.0	12.0	11.9	11.9	11.9	11.8	11.8
	-10.5	-11.0	12.5	12.5	12.4	12.4	12.4	12.0
	-9.5	-10.0	12.7	12.7	12.7	12.7	12.7	12.0
	-8.5	-9.1	13.0	13.0	12.9	12.9	12.9	12.0
	-7.0	-7.6	13.3	13.3	13.3	13.2	12.9	12.0
	-5.0	-5.6	13.9	13.8	13.8	13.4	12.9	12.0
	-3.0	-3.7	14.5	14.2	13.8	13.4	12.9	12.0
	0.0	-0.7	14.8	14.3	13.8	13.4	12.9	12.0
	3.0	2.2	15.2	14.7	13.8	13.4	12.9	12.0
	5.0	4.1	15.4	14.7	13.8	13.4	12.9	12.0
	7.0	6.0	15.6	14.7	13.8	13.4	12.9	12.0
	9.0	7.9	15.6	14.7	13.8	13.4	12.9	12.0
	11.0	9.8	15.6	14.7	13.8	13.4	12.9	12.0
	13.0	11.8	15.6	14.7	13.8	13.4	12.9	12.0
	15.0	13.7	15.6	14.7	13.8	13.4	12.9	12.0

Notes:

TC: Total Capacity(kW)

1. Capacity tables show the representative value of conditions which may occur.
2. is shown as reference. When selecting the outdoor units, avoid the outdoor air temperature range shown by .
3. In accordance with operation limits of outdoor unit, applicable range of capacity tables is different.
4. Refer to Capacity Correction Factor in the outdoor unit PDB for the actual performance data of each indoor unit and outdoor unit combination.

6. Capacity Tables

Heating capacity

Capacity Index	Outdoor air temp.		Indoor air temp. (DB, °C)					
			16	18	20	21	22	24
	DB(°C)	WB(°C)	TC	TC	TC	TC	TC	TC
			kW	kW	kW	kW	kW	kW
14.1	-24.8	-25.0	9.2	9.2	9.1	9.1	9.1	9.1
	-21.8	-22.0	11.1	11.1	11.1	11.1	11.1	11.0
	-19.8	-20.0	11.7	11.7	11.6	11.6	11.6	11.6
	-18.8	-19.0	12.0	11.9	11.9	11.9	11.9	11.9
	-16.7	-17.0	12.5	12.5	12.5	12.4	12.4	12.4
	-14.7	-15.0	13.2	13.2	13.1	13.1	13.1	13.0
	-12.6	-13.0	13.8	13.7	13.7	13.7	13.6	13.6
	-10.5	-11.0	14.4	14.4	14.3	14.3	14.3	13.9
	-9.5	-10.0	14.7	14.7	14.6	14.6	14.6	13.9
	-8.5	-9.1	14.9	14.9	14.9	14.9	14.9	13.9
	-7.0	-7.6	15.4	15.3	15.3	15.2	14.9	13.9
	-5.0	-5.6	16.0	15.9	15.9	15.4	14.9	13.9
	-3.0	-3.7	16.7	16.3	15.9	15.4	14.9	13.9
	0.0	-0.7	17.0	16.5	15.9	15.4	14.9	13.9
	3.0	2.2	17.5	16.9	15.9	15.4	14.9	13.9
	5.0	4.1	17.7	16.9	15.9	15.4	14.9	13.9
	7.0	6.0	17.9	16.9	15.9	15.4	14.9	13.9
	9.0	7.9	17.9	16.9	15.9	15.4	14.9	13.9
	11.0	9.8	17.9	16.9	15.9	15.4	14.9	13.9
	13.0	11.8	17.9	16.9	15.9	15.4	14.9	13.9
	15.0	13.7	17.9	16.9	15.9	15.4	14.9	13.9
15.8	-24.8	-25.0	10.4	10.4	10.4	10.4	10.4	10.3
	-21.8	-22.0	12.6	12.6	12.5	12.5	12.5	12.4
	-19.8	-20.0	13.2	13.2	13.2	13.2	13.2	13.1
	-18.8	-19.0	13.6	13.5	13.5	13.5	13.4	13.4
	-16.7	-17.0	14.2	14.2	14.2	14.1	14.1	14.1
	-14.7	-15.0	14.9	14.9	14.8	14.8	14.8	14.8
	-12.6	-13.0	15.6	15.5	15.5	15.5	15.4	15.4
	-10.5	-11.0	16.3	16.3	16.2	16.2	16.2	15.7
	-9.5	-10.0	16.6	16.6	16.5	16.5	16.5	15.7
	-8.5	-9.1	16.9	16.9	16.8	16.8	16.8	15.7
	-7.0	-7.6	17.4	17.3	17.3	17.3	16.8	15.7
	-5.0	-5.6	18.1	18.0	18.0	17.4	16.8	15.7
	-3.0	-3.7	18.9	18.5	18.0	17.4	16.8	15.7
	0.0	-0.7	19.3	18.6	18.0	17.4	16.8	15.7
	3.0	2.2	19.8	19.2	18.0	17.4	16.8	15.7
	5.0	4.1	20.1	19.2	18.0	17.4	16.8	15.7
	7.0	6.0	20.3	19.2	18.0	17.4	16.8	15.7
	9.0	7.9	20.3	19.2	18.0	17.4	16.8	15.7
	11.0	9.8	20.3	19.2	18.0	17.4	16.8	15.7
	13.0	11.8	20.3	19.2	18.0	17.4	16.8	15.7
	15.0	13.7	20.3	19.2	18.0	17.4	16.8	15.7
22.4	-24.8	-25.0	14.6	14.6	14.5	14.5	14.5	14.4
	-21.8	-22.0	17.6	17.6	17.5	17.5	17.5	17.4
	-19.8	-20.0	18.5	18.5	18.4	18.4	18.4	18.3
	-18.8	-19.0	19.0	18.9	18.9	18.9	18.8	18.8
	-16.7	-17.0	19.8	19.8	19.8	19.7	19.7	19.7
	-14.7	-15.0	20.9	20.9	20.8	20.8	20.8	20.7
	-12.6	-13.0	21.8	21.7	21.7	21.7	21.6	21.6
	-10.5	-11.0	22.8	22.8	22.7	22.7	22.7	22.0
	-9.5	-10.0	23.2	23.2	23.1	23.1	23.1	22.0
	-8.5	-9.1	23.7	23.7	23.6	23.6	23.6	22.0
	-7.0	-7.6	24.4	24.3	24.3	24.2	23.6	22.0
	-5.0	-5.6	25.3	25.3	25.2	24.4	23.6	22.0
	-3.0	-3.7	26.5	25.8	25.2	24.4	23.6	22.0
	0.0	-0.7	27.0	26.1	25.2	24.4	23.6	22.0
	3.0	2.2	27.7	26.8	25.2	24.4	23.6	22.0
	5.0	4.1	28.1	26.8	25.2	24.4	23.6	22.0
	7.0	6.0	28.4	26.8	25.2	24.4	23.6	22.0
	9.0	7.9	28.4	26.8	25.2	24.4	23.6	22.0
	11.0	9.8	28.4	26.8	25.2	24.4	23.6	22.0
	13.0	11.8	28.4	26.8	25.2	24.4	23.6	22.0
	15.0	13.7	28.4	26.8	25.2	24.4	23.6	22.0

Notes:

TC: Total Capacity(kW)

1. Capacity tables show the representative value of conditions which may occur.
2. is shown as reference. When selecting the outdoor units, avoid the outdoor air temperature range shown by .
3. In accordance with operation limits of outdoor unit, applicable range of capacity tables is different.
4. Refer to Capacity Correction Factor in the outdoor unit PDB for the actual performance data of each indoor unit and outdoor unit combination.

6. Capacity Tables

Heating capacity

Capacity Index	Outdoor air temp.		Indoor air temp. (DB, °C)					
			16	18	20	21	22	24
	DB(°C)	WB(°C)	TC	TC	TC	TC	TC	TC
			kW	kW	kW	kW	kW	kW
28.0	-24.8	-25.0	18.2	18.2	18.1	18.1	18.1	18.0
	-21.8	-22.0	22.0	22.0	21.9	21.9	21.9	21.8
	-19.8	-20.0	23.2	23.2	23.0	23.0	23.0	22.9
	-18.8	-19.0	23.8	23.6	23.6	23.6	23.5	23.5
	-16.7	-17.0	24.8	24.8	24.8	24.7	24.7	24.7
	-14.7	-15.0	26.1	26.1	26.0	26.0	26.0	25.8
	-12.6	-13.0	27.3	27.1	27.1	27.1	27.0	27.0
	-10.5	-11.0	28.5	28.5	28.3	28.3	28.3	27.5
	-9.5	-10.0	29.1	29.1	28.9	28.9	28.9	27.5
	-8.5	-9.1	29.6	29.6	29.4	29.4	29.4	27.5
	-7.0	-7.6	30.5	30.3	30.3	30.2	29.5	27.5
	-5.0	-5.6	31.6	31.6	31.5	30.5	29.5	27.5
	-3.0	-3.7	33.1	32.3	31.5	30.5	29.5	27.5
	0.0	-0.7	33.7	32.6	31.5	30.5	29.5	27.5
	3.0	2.2	34.6	33.5	31.5	30.5	29.5	27.5
	5.0	4.1	35.2	33.5	31.5	30.5	29.5	27.5
	7.0	6.0	35.5	33.5	31.5	30.5	29.5	27.5
	9.0	7.9	35.5	33.5	31.5	30.5	29.5	27.5
	11.0	9.8	35.5	33.5	31.5	30.5	29.5	27.5
	13.0	11.8	35.5	33.5	31.5	30.5	29.5	27.5
	15.0	13.7	35.5	33.5	31.5	30.5	29.5	27.5

Notes:

TC: Total Capacity(kW)

1. Capacity tables show the representative value of conditions which may occur.
2. is shown as reference. When selecting the outdoor units, avoid the outdoor air temperature range shown by .
3. In accordance with operation limits of outdoor unit, applicable range of capacity tables is different.
4. Refer to Capacity Correction Factor in the outdoor unit PDB for the actual performance data of each indoor unit and outdoor unit combination.

7. External Static Pressure (E.S.P) & Air Flow

ARNU28GBGA4, ARNU36GBGA4, ARNU42GBGA4

(Unit: CMM)

Setting Value	Static Pressure(mmAq(Pa))								
	5(49)	6(59)	7(69)	8(78)	9(88)	10(98)	12(118)	14(137)	16(157)
70	-	-	-	-	-	-	-	-	-
80	4.0	-	-	-	-	-	-	-	-
90	12.1	9.3	4.1	-	-	-	-	-	-
100	17.0	13.5	11.0	6.2	4.2	-	-	-	-
110	21.4	18.6	17.5	14.0	11.6	6.6	-	-	-
120	25.6	24.0	21.8	19.8	17.9	14.6	12.1	-	-
130	30.0	28.5	26.9	25.3	23.4	21.8	18.1	14.6	11.3
140	35.0	32.1	30.4	29.0	27.4	25.9	21.6	17.8	14.5
143	36.1	33.9	32.1	30.7	28.8	27.2	23.0	20.1	16.8
150	38.5	38.0	36.0	34.5	32.1	30.1	26.3	22.4	18.2
160	-	-	38.2	36.1	35.0	34.6	31.1	26.8	23.3

Note : 1. The above table shows the correlation between the air rates and E.S.P.
2. The above table shows the available E.S.P. range.
3. If the E.S.P. of the installed indoor is less than the lowest value(as mention in the table), indoor components can be failed.

Fan Performance

ARNU28GBGA4, ARNU36GBGA4, ARNU42GBGA4

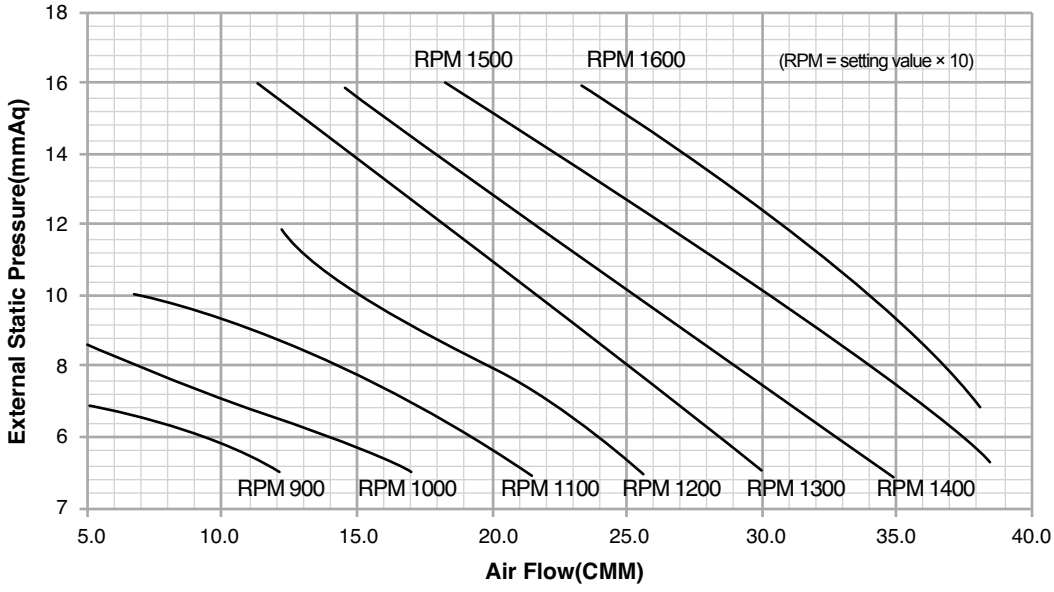

7. External Static Pressure (E.S.P) & Air Flow

ARNU48GBRA4, ARNU54GBRA4

(Unit: CMM)

Setting Value	Static Pressure(mmAq(Pa))										
	5(49)	6(59)	8(78)	10(98)	12(118)	14(137)	15(147)	16(157)	17(168)	18(176)	20(196)
91	46.5	43.7	38.2	31.3	23.2	14.0	9.0	3.7	-	-	-
96	49.9	46.1	43.0	33.5	31.1	18.4	13.7	9.0	2.6	-	-
101	52.1	50.2	47.9	39.5	37.4	27.3	25.2	17.8	8.9	6.1	-
106	51.4	51.2	50.4	44.4	43.1	33.3	32.1	28.9	21.0	17.9	8.3
111	53.6	53.7	52.9	49.9	48.3	40.6	40.2	32.8	31.5	27.2	17.5
116	-	-	-	55.7	50.8	44.8	42.6	40.1	37.6	32.5	27.6
121	-	-	-	-	52.2	51.0	50.3	45.7	44.6	38.8	32.2
126	-	-	-	-	-	-	54.4	51.2	50.4	46.0	43.5

Note: 1. The above table shows the correlation between the air rates and E.S.P.
2. The above table shows the available E.S.P. range.
3. If the E.S.P. of the installed indoor is less than the lowest value(as mention in the table), indoor components can be failed.

Fan Performance

ARNU48GBRA4, ARNU54GBRA4

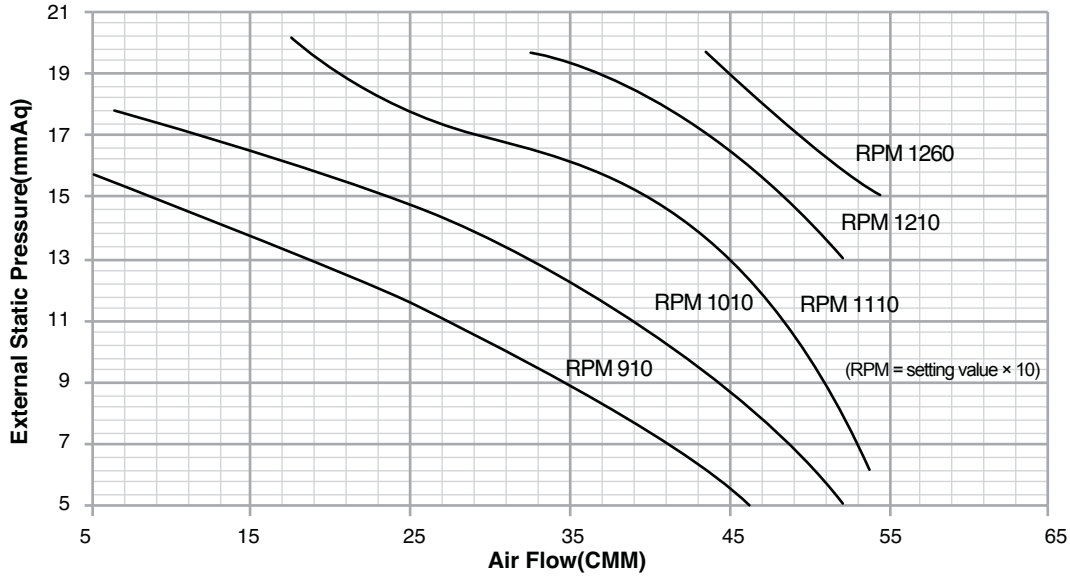

7. External Static Pressure (E.S.P) & Air Flow

ARNU76GB8A4, ARNU96GB8A4

(Unit: CMM)

Setting Value	Static Pressure(mmAq(Pa))											
	3(29)	4(39)	5(49)	6(59)	9(88)	12(118)	15(147)	18(177)	20(196)	22(216)	23(226)	25(245)
50	40.3	36.2	-	-	-	-	-	-	-	-	-	-
55	48.8	44.2	36.4	-	-	-	-	-	-	-	-	-
60	54.9	50.2	49.7	45.0	-	-	-	-	-	-	-	-
65	62.6	60.4	55.1	52.9	-	-	-	-	-	-	-	-
70	67.9	64.5	62.1	60.7	47.1	-	-	-	-	-	-	-
75	75.5	72.2	69.0	68.5	56.9	44.7	-	-	-	-	-	-
80	82.6	80.9	76.6	75.4	69.7	55.2	-	-	-	-	-	-
85	88.8	85.9	82.0	81.6	78.6	67.4	55.9	-	-	-	-	-
91	94.7	93.0	90.4	90.2	87.1	78.9	67.6	54.2	-	-	-	-
95	-	-	-	-	-	86.1	77.0	66.4	50.6	30.0	-	-
100	-	-	-	-	-	88.3	84.9	75.9	69.5	60.8	43.1	-
105	-	-	-	-	-	88.3	84.9	81.1	77.4	72.0	67.9	51.3

Note:

1. The above table shows the correlation between the air rates and E.S.P.
2. The above table shows the available E.S.P. range.
3. If the E.S.P. of the installed indoor is less than the lowest value(as mention in the table), indoor components can be failed.

Fan Performance

ARNU76GB8A4, ARNU96GB8A4

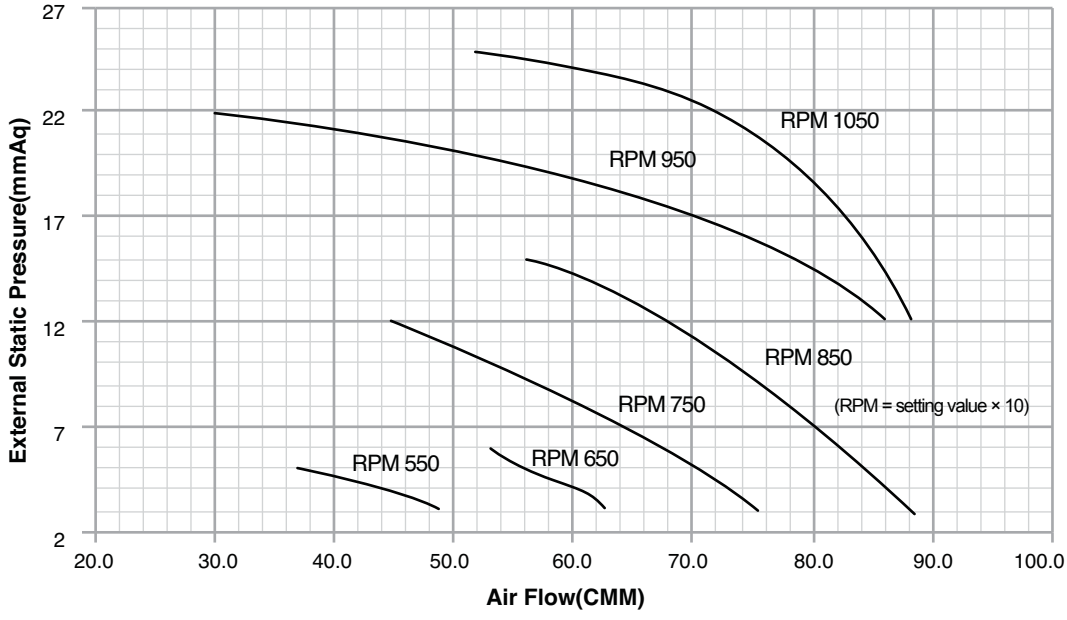

7. External Static Pressure (E.S.P) & Air Flow

ARNU28GBGA4, ARNU36GBGA4, ARNU42GBGA4

Capacity	Mode		Set value	Standard ESP(mmAq(Pa))	CMM	Lower Limit of External Static Pressure(mmAq(Pa))	Upper Limit of External Static Pressure(mmAq(Pa))
28k	High (factory set)	HI	139	10(98)	25.9	8(78)	16(157)
		Mid	135		24.1		
		Low	129		21.8		
	Standard	HI	130	8(78)	25.3	5(49)	10(98)
		Mid	123		21.8		
		Low	116		17.6		
36k	High (factory set)	HI	151	10(98)	32.3	8(78)	14(137)
		Mid	145		29.0		
		Low	139		25.3		
	Standard	HI	138	8(78)	28.4	5(49)	10(98)
		Mid	130		25.3		
		Low	124		21.8		
42k	High (factory set)	HI	157	10(98)	34.5	8(78)	12(118)
		Mid	154		32.3		
		Low	151		30.7		
	Standard	HI	145	8(78)	32.0	5(49)	10(98)
		Mid	138		28.4		
		Low	134		27.2		

ARNU48GBRA4, ARNU54GBRA4

Capacity	Mode		Set value	Standard ESP(mmAq(Pa))	CMM	Lower Limit of External Static Pressure(mmAq(Pa))	Upper Limit of External Static Pressure(mmAq(Pa))
48k	High (factory set)	HI	116	14(137)	44.8	10(98)	20(196)
		Mid	111		40.6		
		Low	106		33.3		
	Standard	HI	106	10(98)	44.4	5(49)	14(137)
		Mid	102		39.5		
		Low	95		33.5		
54k	High (factory set)	HI	121	14(137)	51.0	10(98)	20(196)
		Mid	116		44.8		
		Low	111		40.6		
	Standard	HI	112	10(98)	51.5	5(49)	14(137)
		Mid	108		47.5		
		Low	102		39.5		

ARNU76GB8A4, ARNU96GB8A4

Capacity	Mode		Set value	Standard ESP(mmAq(Pa))	CMM	Lower Limit of External Static Pressure(mmAq(Pa))	Upper Limit of External Static Pressure(mmAq(Pa))
76k	High (factory set)	HI	102	22(216)	60.0	12(118)	25(245)
		Mid	98		50.0		
		Low	98		50.0		
	Standard	HI	86	15(147)	64.0	12(118)	25(245)
		Mid	83		50.0		
		Low	83		50.0		
96k	High (factory set)	HI	105	22(216)	72.0	12(118)	25(245)
		Mid	102		64.0		
		Low	102		64.0		
	Standard	HI	94	15(147)	76.0	12(118)	25(245)
		Mid	89		64.0		
		Low	89		64.0		

Note:
The above table shows the available E.S.P. range.

8. Electric Characteristics

Units					Power Supply		IFM		Input(W)	
Model	Type	Hz	Volts	Voltage Range	MCA	MFA	kW	FLA	Cooling	Heating
ARNU28GBGA4	BG	50	220-240	Max:264 Min:198	3.31	15	0.350	2.65	450	450
ARNU36GBGA4	BG				3.31	15	0.350	2.65	450	450
ARNU42GBGA4	BG				3.31	15	0.350	2.65	450	450
ARNU48GBRA4	BR				4.40	15	0.370	3.50	450	450
ARNU54GBRA4	BR				4.40	15	0.370	3.50	450	450
ARNU76GB8A4	B8				6.50	15	0.750	5.20	800	800
ARNU96GB8A4	B8				6.50	15	0.750	5.20	800	800
ARNU28GBGA4	BG	60	220	Max:242 Min:198	3.31	15	0.350	2.65	450	450
ARNU36GBGA4	BG				3.31	15	0.350	2.65	450	450
ARNU42GBGA4	BG				3.31	15	0.350	2.65	450	450
ARNU48GBRA4	BR				4.40	15	0.370	3.50	450	450
ARNU54GBRA4	BR				4.40	15	0.370	3.50	450	450
ARNU76GB8A4	B8				6.50	15	0.750	5.20	800	800
ARNU96GB8A4	B8				6.50	15	0.750	5.20	800	800

Symbols:

MCA : Min, Circuit Amps(A)
MFA : Max. Fuse Amps(see note 5)
kW : Fan Motor Rated Output(kW)
FLA : Full Load Amps(A)
IFM : Indoor Fan Motor

Note :

1. Voltage range
   Units are suitable for use on electrical systems where voltage supplied to unit terminals is not below or above the listed range limits,
2. Maximum allowable voltage unbalance between phases is 2%
3. MCA/MFA
   MCA=1.25 x FLA
   MFA≤ 4 x FLA
   (Next lower standard fuse rating. Min. 15A)
4. Select wire size based on the MCA
5. Instead of fuse, use Circuit Breaker.

9. Sound Levels

Overall

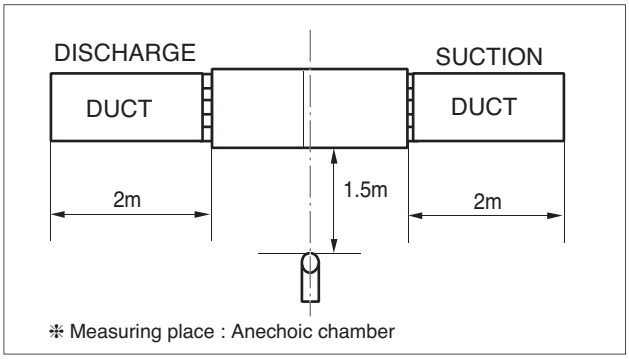

Notes:

1. Sound measured at 1.5m away from the center of the unit
2. Operating conditionl
   - Power source : 220-240V 50Hz / 220V 60Hz
   - Cooling : Indoor temperature (27°C DB, 19°C WB), Outdoor temperature (35°C DB, 24°C WB)
   - Heating : Indoor temperature (20°C DB, 15°C WB), Outdoor temperature (7°C DB, 6°C WB)
3. Reference accoustic pressure 0dB = 20μPa
4. Sound level will vary depending on a range of factors such as the construction(acoustic absorption coefficient) of particular room in which the equipment in installed.

Model	Sound Pressure Levels (dB(A),H-M-L)					
	External Static Pressure (Pa)					
	50	80	100	120	140	160
ARNU28GBGA4	29-25-23	33-29-26	34-33-30	35-34-31	36-35-32	37-36-33
ARNU36GBGA4	33-31-28	36-34-31	37-35-32	39-37-34	40-38-35	41-39-36
ARNU42GBGA4	36-33-30	39-36-33	40-38-35	42-39-36	43-40-37	44-41-38

Sound Pressure Level (50Pa)

ARNU28GBGA4

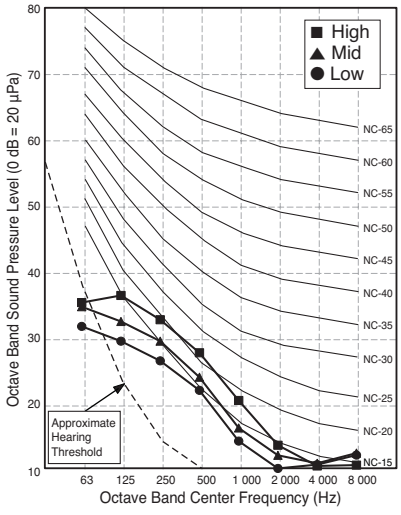

ARNU36GBGA4

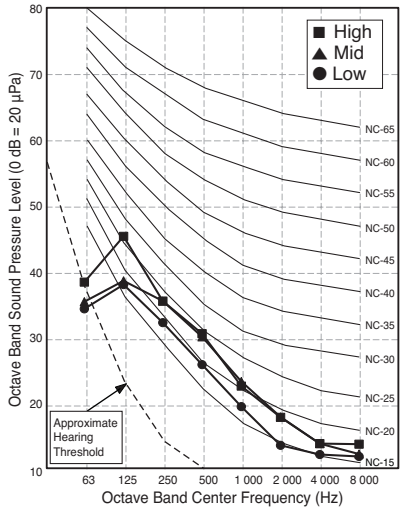

ARNU42GBGA4

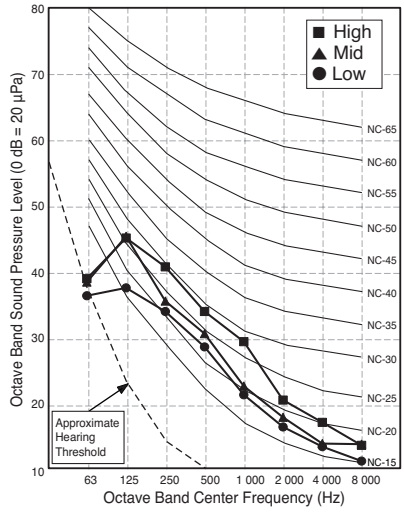

9. Sound Levels

Sound Pressure Level (80Pa)

ARNU28GBGA4

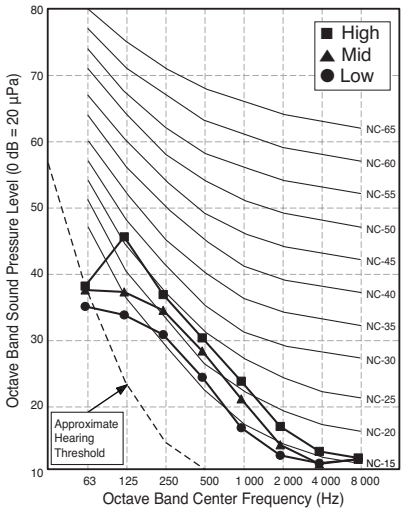

ARNU36GBGA4

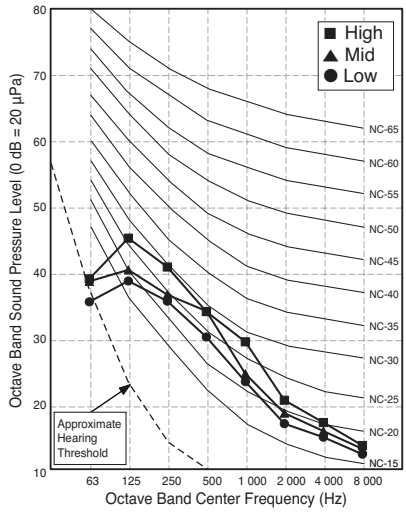

ARNU42GBGA4

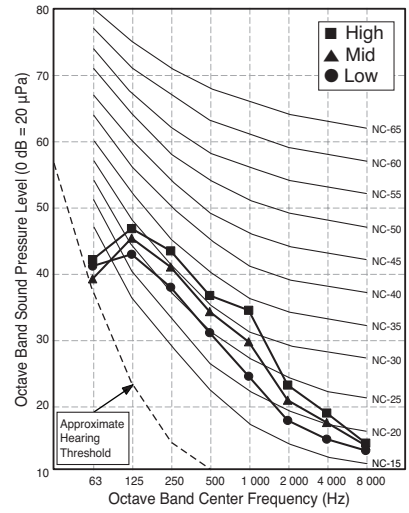

Sound Pressure Level (100Pa)

ARNU28GBGA4

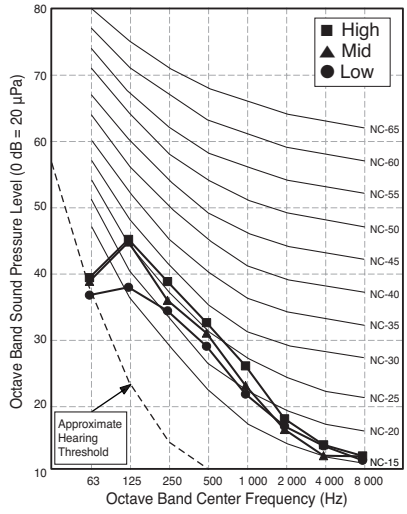

ARNU36GBGA4

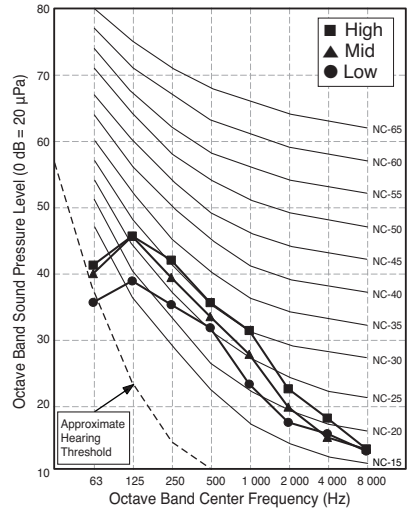

ARNU42GBGA4

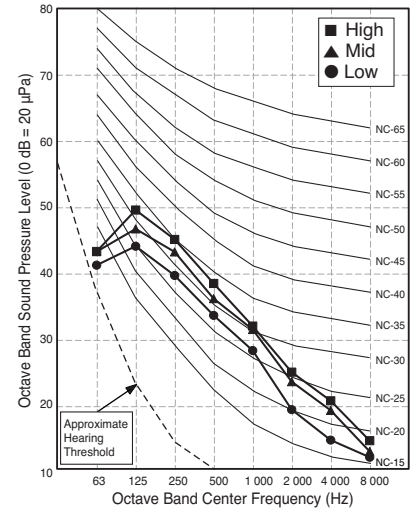

Sound Pressure Level (120Pa)

ARNU28GBGA4

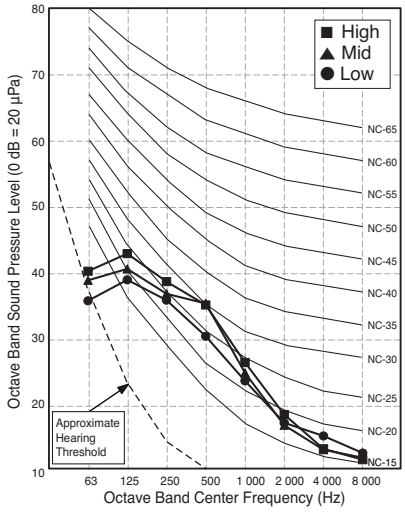

ARNU36GBGA4

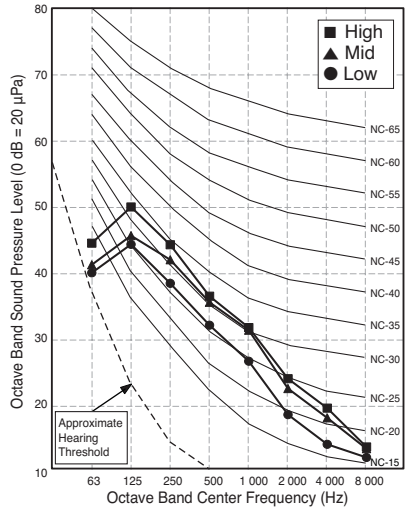

ARNU42GBGA4

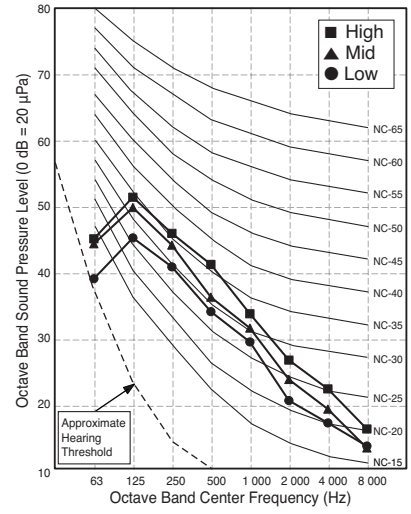

9. Sound Levels

Sound Pressure Level (140Pa)

ARNU28GBGA4

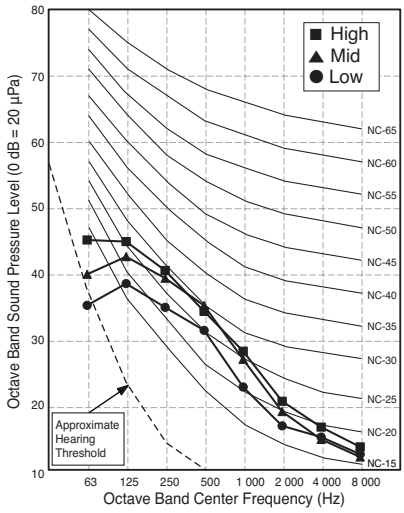

ARNU36GBGA4

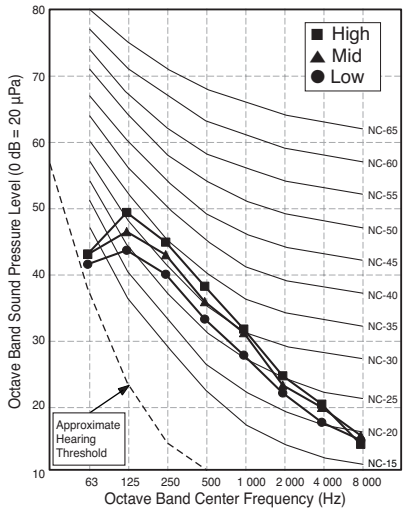

ARNU42GBGA4

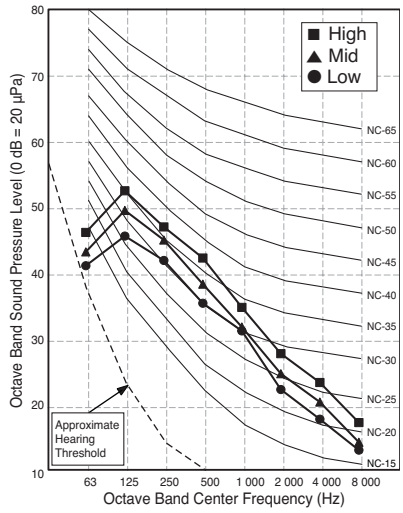

Sound Pressure Level (160Pa)

ARNU28GBGA4

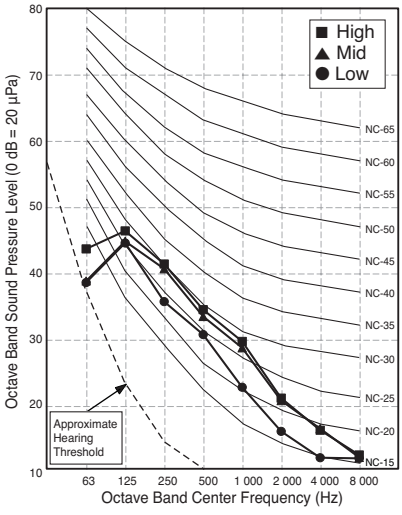

ARNU36GBGA4

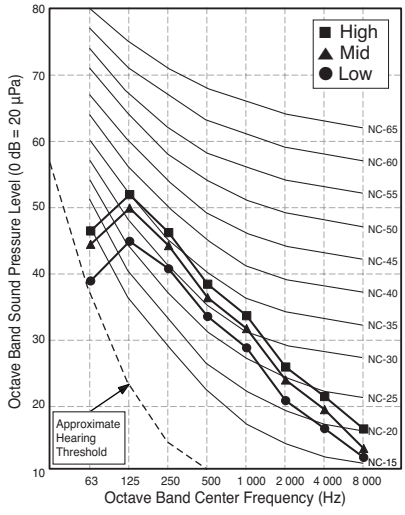

ARNU42GBGA4

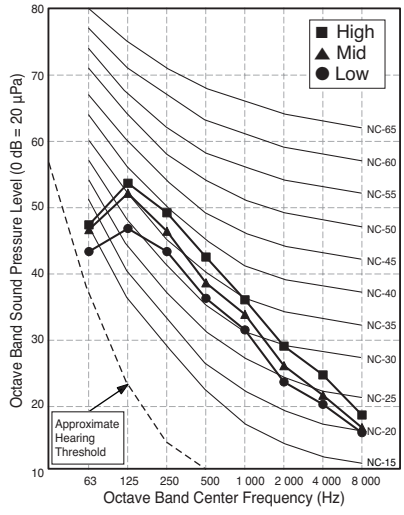

9. Sound Levels

Model	Sound Pressure Levels (dB(A),H-M-L)				
	External Static Pressure (Pa)				
	50	70	100	140	170
ARNU48GBRA4	38-36-34	39-37-35	40-39-37	41-40-38	42-41-39
ARNU54GBRA4	39-37-35	40-38-36	41-39-38	-	-

Sound Pressure Level (50Pa)

ARNU48GBRA4

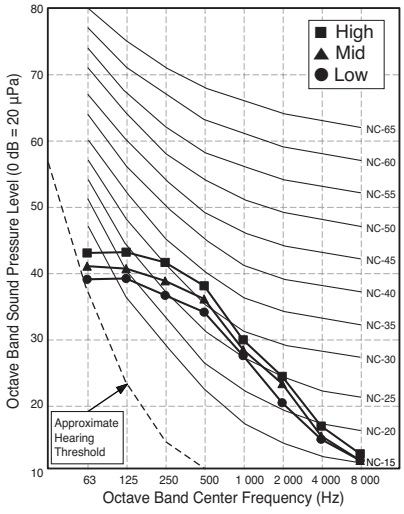

ARNU54GBRA4

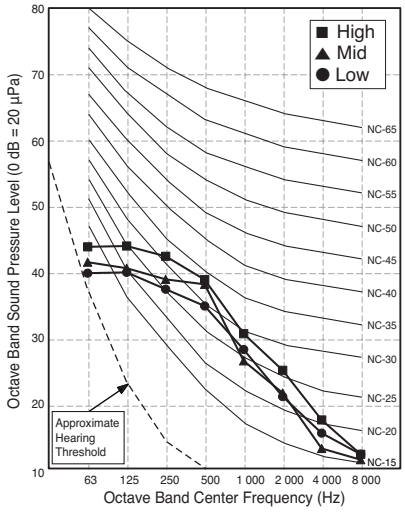

Sound Pressure Level (70Pa)

ARNU48GBRA4

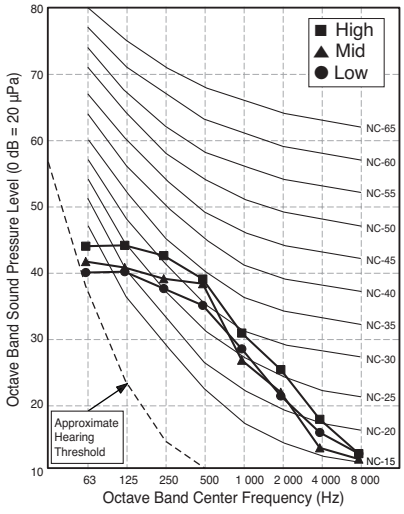

ARNU54GBRA4

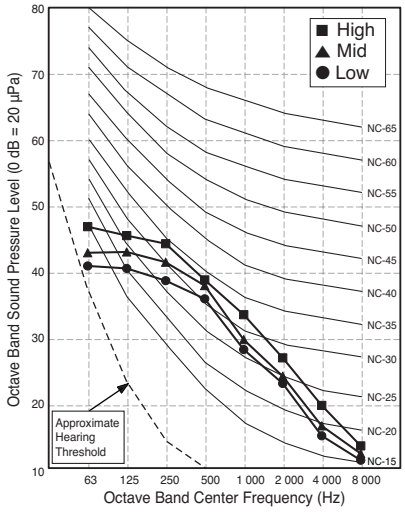

9. Sound Levels

Sound Pressure Level (100Pa)

ARNU48GBRA4

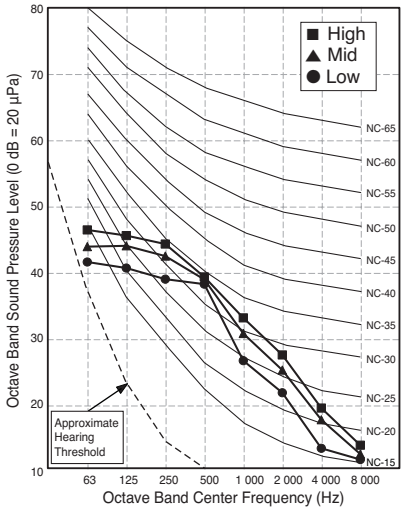

ARNU54GBRA4

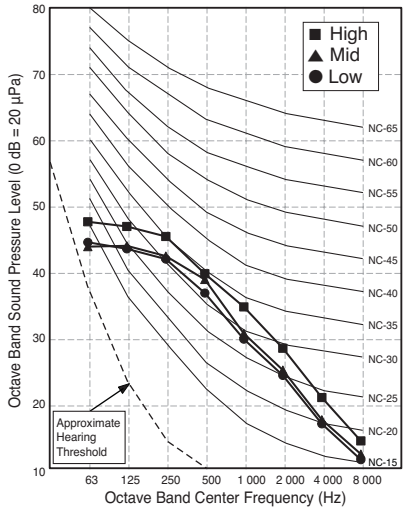

Sound Pressure Level (140Pa)

ARNU48GBRA4

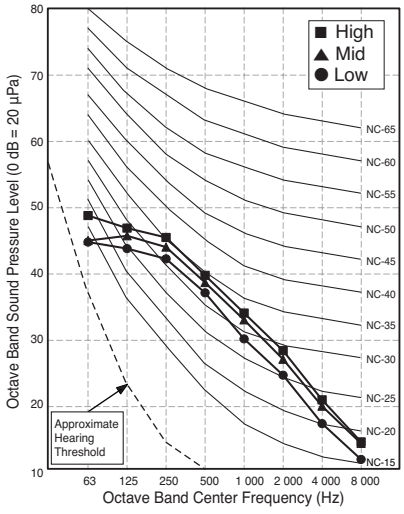

Sound Pressure Level (170Pa)

ARNU48GBRA4

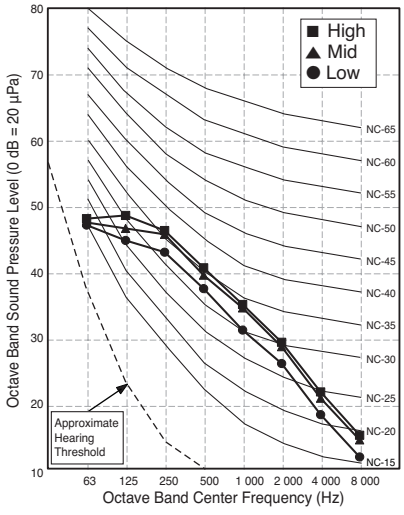

9. Sound Levels

Model	Sound Pressure Levels (dB(A),H-M-L)		
	External Static Pressure (Pa)		
	120	150	220
ARNU76GB8A4	41-40-40	42-41-41	45-43-43
ARNU96GB8A4	43-41-41	44-42-42	47-45-45

Sound Pressure Level (120Pa)

ARNU76GB8A4

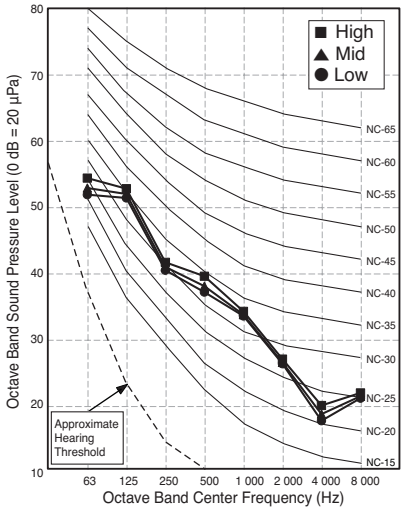

ARNU96GB8A4

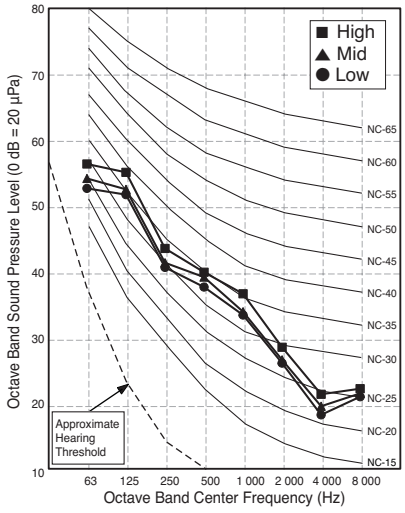

Sound Pressure Level (150Pa)

ARNU76GB8A4

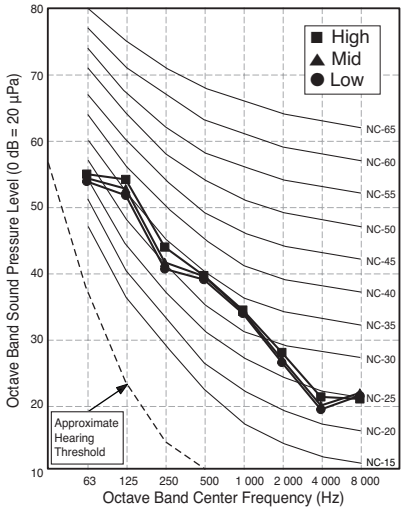

ARNU96GB8A4

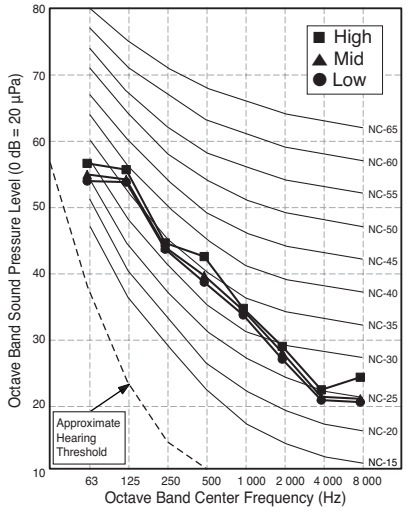

9. Sound Levels

Sound Pressure Level (220Pa)

ARNU76GB8A4

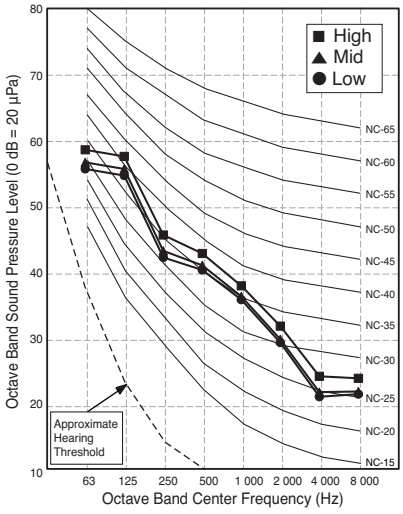

ARNU96GB8A4

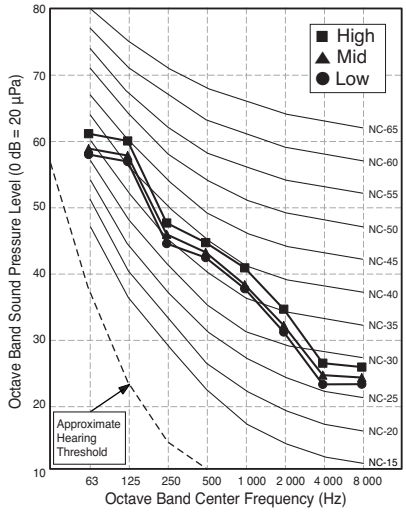

10. Installation

- Please read this instruction sheet completely before installing the product.
- When the power cord is damaged, replacement work shall be performed by authorized personnel only.
- Installation work must be performed in accordance with the national wiring standards by authorized personnel only.

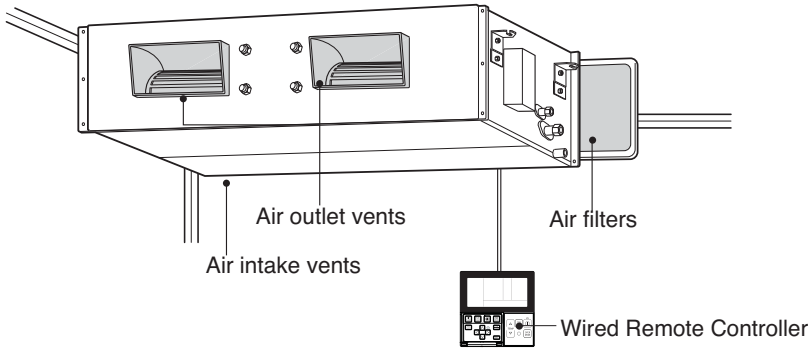

Required Parts

- Connecting cable
- Pipes: Gas side
  Liquid side
- Hanging Bolt
  (W 3/8 or M10 length 650mm)
- Insulated drain hose
- Additional Drain hose

Required Tools

- Level
- Screw driver
- Electric drill
- Hole core drill
- Flaring Tool set
- Torque Wrenches
- Hexagonal Wrench
- Gas-leak detector
- Thermometer

10.1 Selection of the best location

Install the air conditioner in the location that satisfies the following conditions.

- The place shall easily bear a load exceeding four times the indoor unit's weight.
- The place shall be able to inspect the unit as the figure.
- The place where the unit shall be leveled.
- The place shall allow easy water drainage.
  (Suitable dimension "H" is necessary to get a slope to drain as figure.)
- The place shall easily connect with the outdoor unit.
- The place where the unit is not affected by an electrical noise.
- The place where air circulation in the room will be good .
- There should not be any heat source or steam near the unit.
- The servicing inspection hole in the ceiling should be as large as the product
- The selection of the servicing hole should be approved by the customer

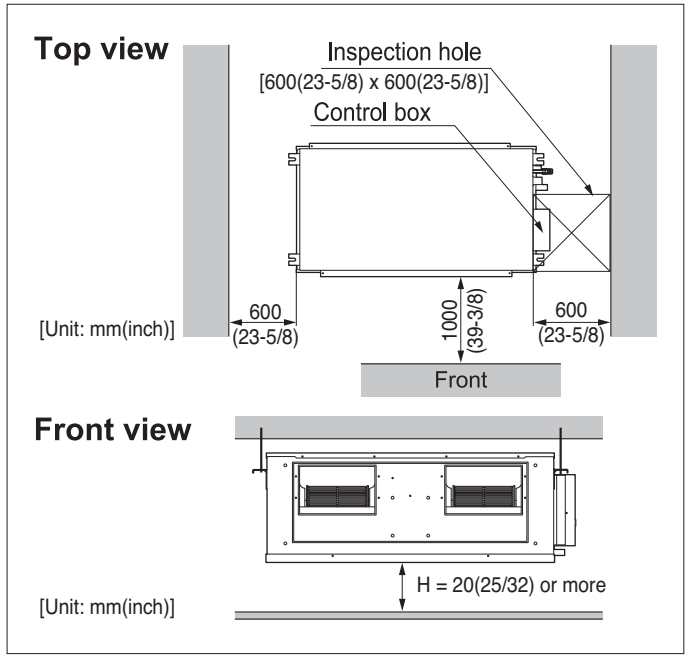

10.2 Ceiling dimension and hanging bolt location

■ **Installation of Unit**

Install the unit above the ceiling correctly.

CASE 1

POSITION OF SUSPENSION BOLT

- Apply a joint-canvas between the unit and duct to absorb unnecessary vibration.
- Apply a filter Accessory at air return hole.
- Refer to the Dimensions.

(Unit:mm)

Dimension / Chassis	A	B	C	D	E	F	(G)	H	I
BH	932	882	355	47	450	30	87	750	158
BG	1232	1182	355	47	450	30	87	830	186
BR	1282	1230	477	56	590	30	120	1006	294

(Unit:mm)

Dimension / Chassis	A	B	C	D	E	F	G	H	I	J	K	L
B8	1622	1565	580	292	695	1400	460	1122	1680	390	445	15

- Install the unit leaning to a drainage hole side as a figure for easy water drainage.

BH/BG/BR Chassis

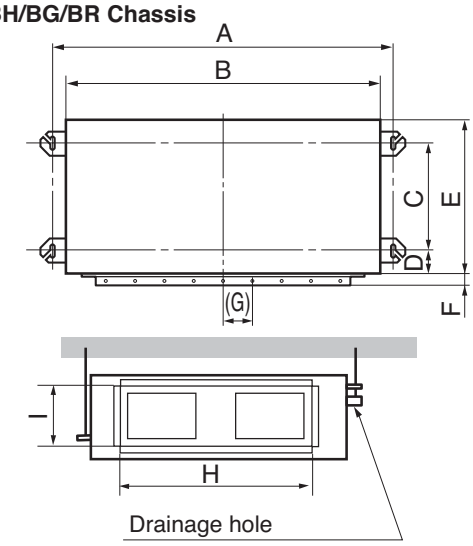

B8 Chassis

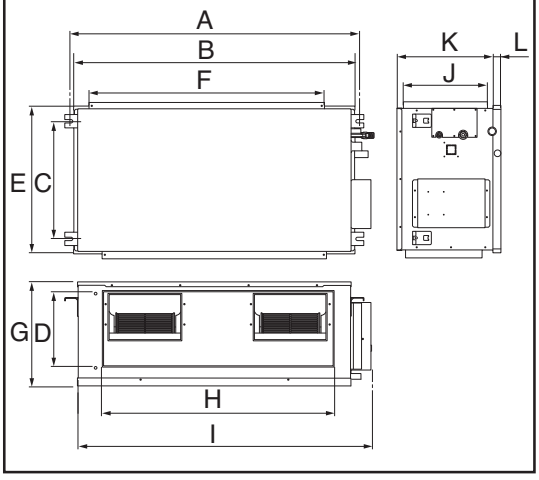

CASE 2

POSITION OF CONSOLE BOLT

- A place where the unit will be leveled and that can support the weight of the unit.
- A place where the unit can withstand its vibration.
- A place where service can be easily performed.

10. Installation

NOTE:· Throughly study the following installation locations:

1. In such places as restaurants and kitchens, considerable amount of oil steam and flour adhere to the fan, the fin of the heat exchanger, resulting in heat exchange reduction, spraying, dispersing of water drops, etc. In these cases, take the following actions:
- **Make sure that the ventilation fan for smoke-collecting hood on a cooking table has sufficient capacity so that it draws oily steam which should not flow into the suction of the air conditioner.**
- **Make enough distance from a cooking room to install the air conditioner in such a place where it may not suck in oil steam.**

2. Avoid installing air conditioner in such circumstances where cutting oil mist or iron powder is in suspension in factories, etc.

3. Avoid places where inflammable gas is generated, flows in, is stored or vented.

4. Avoid places where sulfurous acid gas or corrosive gas is generated.

5. Avoid places near high frequency generators.

- Select and mark the position for fixing bolts.
- Drill the hole for set anchor on the face of ceiling.

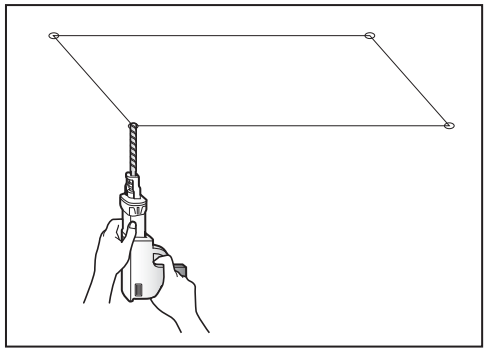

⚠ CAUTION

Tighten the nut and bolt to prevent unit falling.

- Insert the set anchor and washer onto the suspension bolts for locking the suspension bolts on the ceiling.
- Mount the suspension bolts to the set anchor firmly.
- Secure the installation plates onto the suspension bolts (adjust level roughly) using nuts, washers and spring washers.

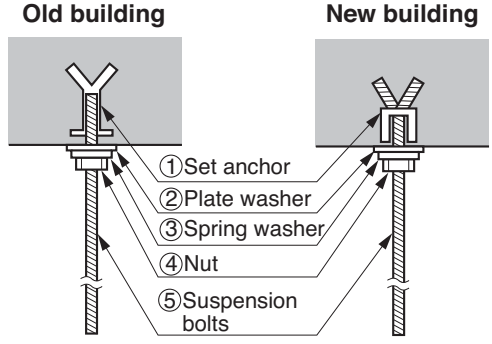

10.3 Connecting Cables between Indoor Unit and Outdoor Unit

Connect the wires to the terminals on the control board individually according to the outdoor unit connection.

• Ensure that the color of the wires of outdoor unit and the terminal No. are the same as those of indoor unit respectively

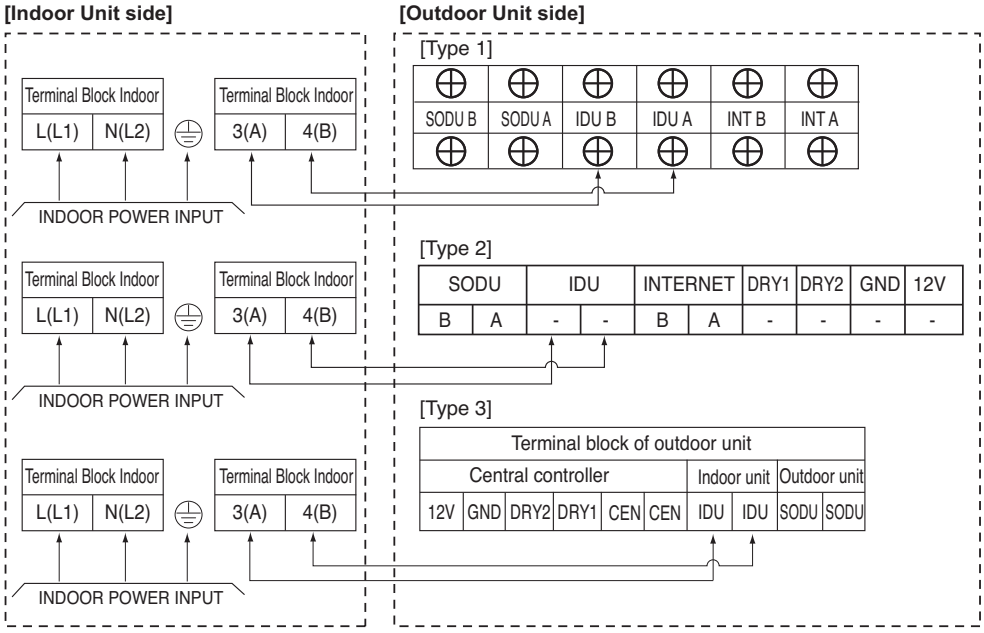

⚠ WARNING

Make sure that the screws of the terminal are not loose.

Clamping of cables

1) Arrange 2 power cables on the control panel.
2) First, fasten the steel clamp with a screw to the inner boss of control panel.
3) For the cooling model, fix the other side of the clamp with a screw strongly. For the heat pump model, put the 0.75mm² cable(thinner cable) on the clamp and tighten it with a plastic clamp to the other boss of the control panel.

10. Installation

THERMAL INSULATION All thermal insulation must comply with local requirement.

INDOOR UNIT

BH/BG/BR Chassis

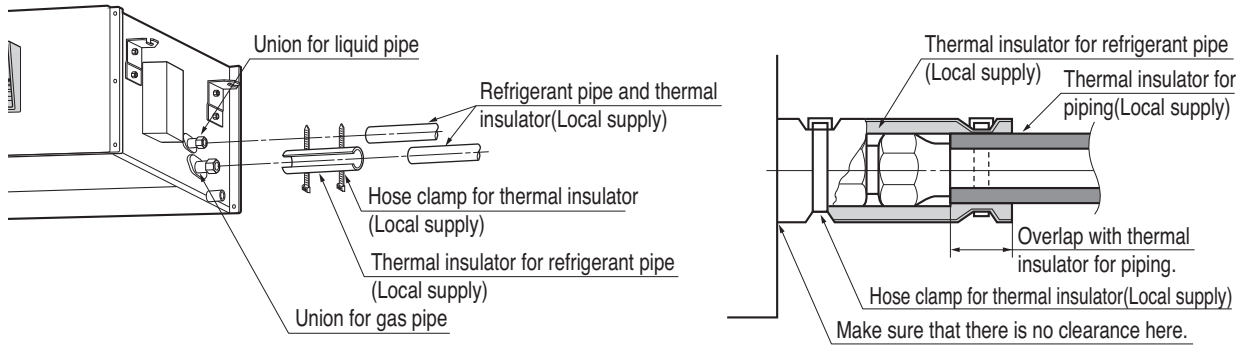

B8

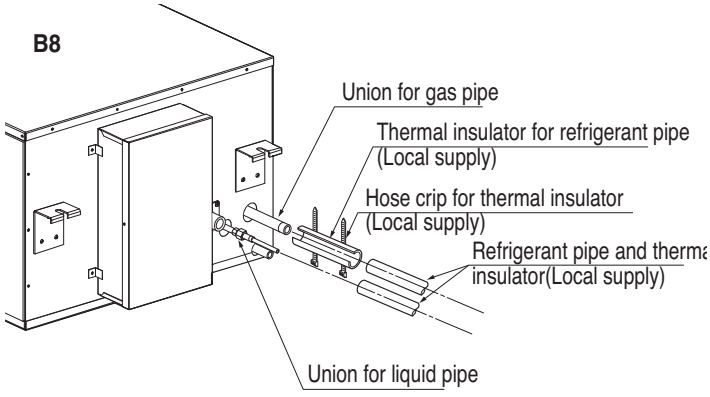

10.4 Checking the Drainage

1) Checking the Drainage

1. Remove the Air Filter.

2. Check the drainage.

- Spray one or two glasses of water on the evaporator.
- Ensure that water flows through drain hose of indoor unit without any leakage.

BH/BG/BR Chassis

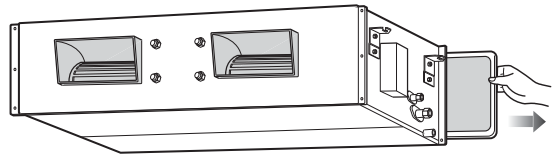

B8

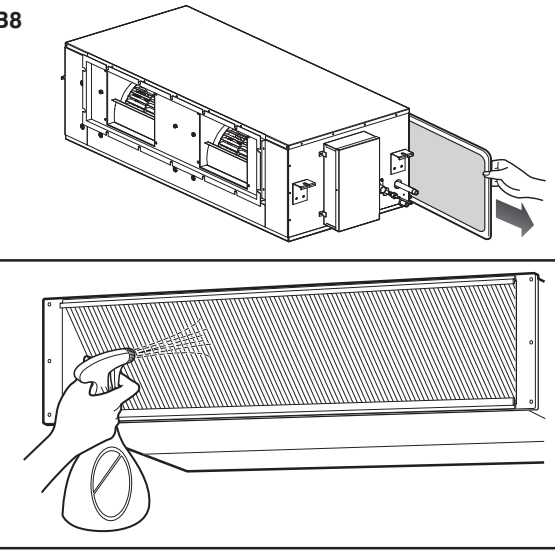

10.5 Indoor Unit Drain Piping

- Drain piping must have down-slope (1/50 to 1/100): be sure not to provide up-and-down slope to prevent reversal flow.
- During drain piping connection, be careful not to exert extra force on the drain port on the indoor unit.
- The outside diameter of the drain connection on the indoor unit is 32mm.

Piping material: Polyvinyl chloride pipe inner diometes Ø 25mm and pipe fittings

- Be sure to install heat insulation on the drain piping.

Heat insulation material: Polyethylene foam with thickness more than 8 mm.

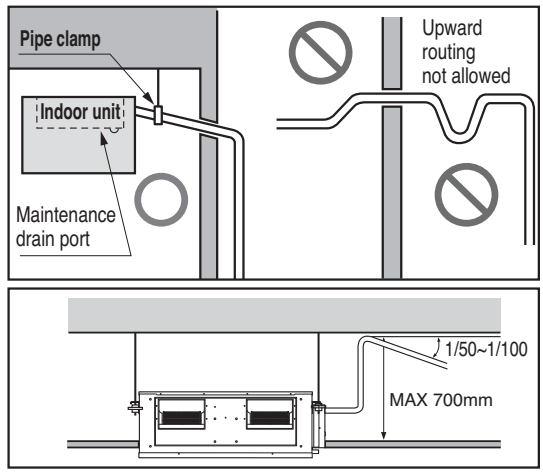

Drain test

The air conditioner uses a drain pump to drain water.
Use the following procedure to test the drain pump operation:

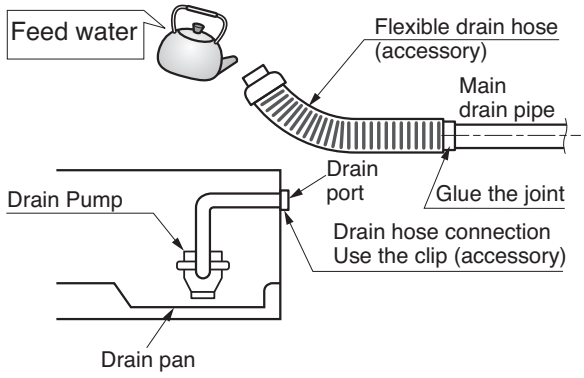

- Connect the main drain pipe to the exterior and leave it provisionally until the test comes to an end.
- Feed water to the flexible drain hose and check the piping for leakage.
- Be sure to check the drain pump for normal operation and noise when electrical wiring is complete.
- When the test is complete, connect the flexible drain hose to the drain port on the indoor unit.

⚠ CAUTION

The supplied flexible drain hose should not be strained.
A strained hose may cause leakage of water.

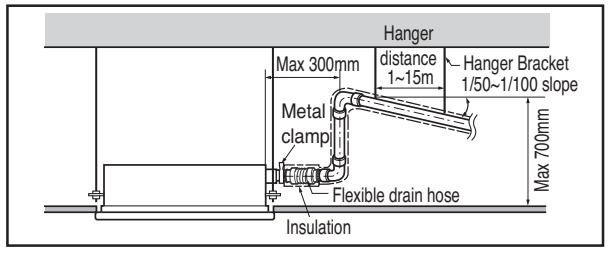

10.6 Ground drain piping

a) It is standard work practice to make connections to the main pipe from above. The pipe down from the combination should be as large as possible.

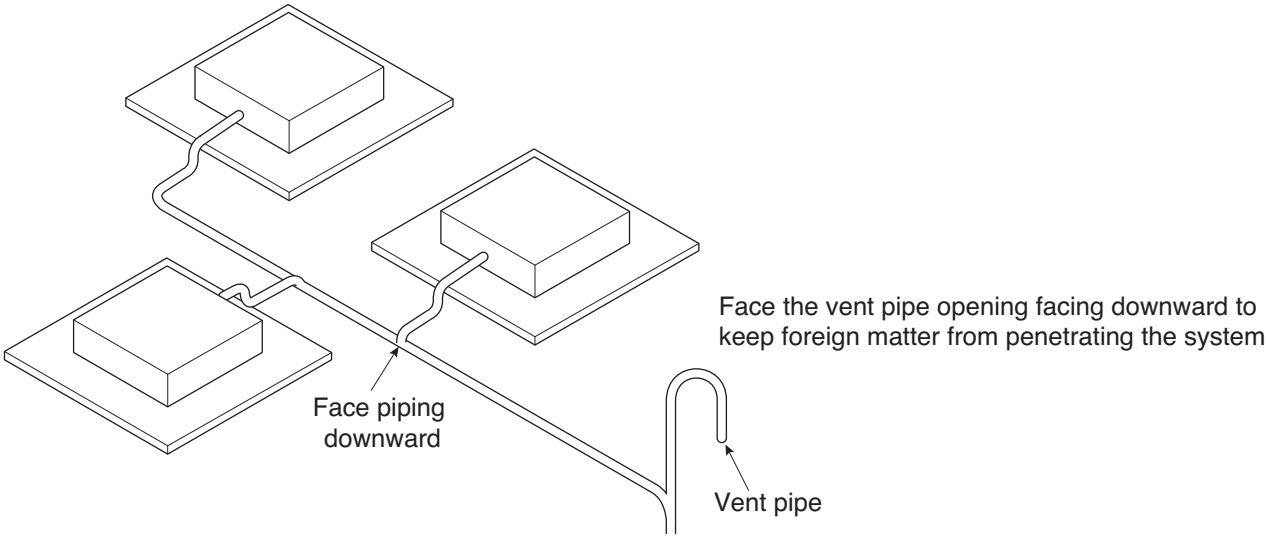

b) The pipe work should be kept as short as possible and the number of indoor units per group kept to a minimum.

10.7 Use of an auxiliary drain hose(flexible)

a) To connect drain pipe to the drain socket on the indoor unit, an auxiliary flexible drain hose should be used. auxiliary flexible drain hose allows that the drain pipe can be connected to the socket without breaking by excessive strain.

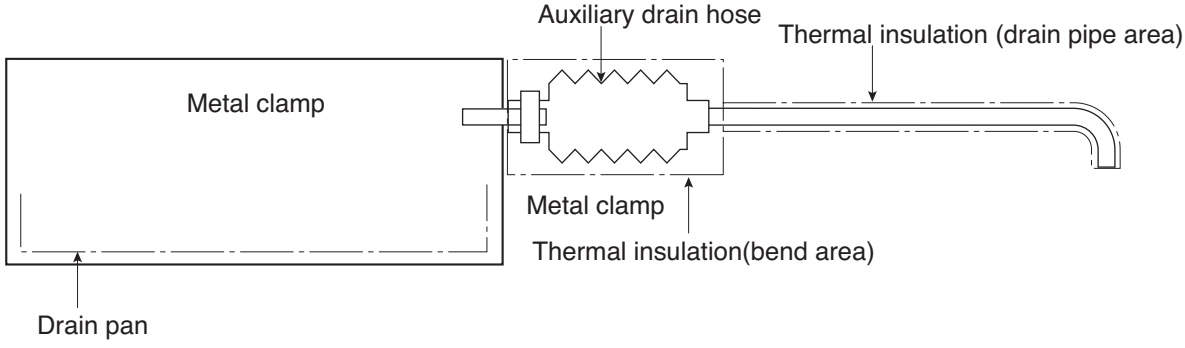

❊ Important points

- The drain pipe should be at least equal in size to that of the indoor unit.
- The drain pipe is thermally insulated to prevent the formation of condensation inside the pipe.
- The drain up mechanism should be fitted before the indoor unit is installed and when the electricity has been connected some water should be added to the drain pan and the drain pump to check and see if it is functioning correctly.
- All connections should be secure. (Special care is needed with PVC pipe)
- Insulate auxiliary drain hose with thermal insulation band.

WIRED REMOTE CONTROLLER INSTALLATION

• Since the room temperature sensor is in the remote controller, the remote controller box should be installed in a place away from direct sunlight, high humidity and direct supply of cold air to maintain proper space temperature.
Install the remote controller about 5ft(1.5m) above the floor in an area with good air circulation at an average temperature.

Do not install the remote controller where it can be affected by:

- Drafts, or dead spots behind doors and in corners.
- Hot or cold air from ducts.
- Radiant heat from sun or appliances.
- Concealed pipes and chimneys.
- Uncontrolled areas such as an outside wall behind the remote controller.
- This remote controller is equipped with a seven segment LED. display. For proper display of the remote controller LED's, the remote controller should be installed properly as shown in Fig.1.
(The standard height is 1.2~1.5 m from floor level.)

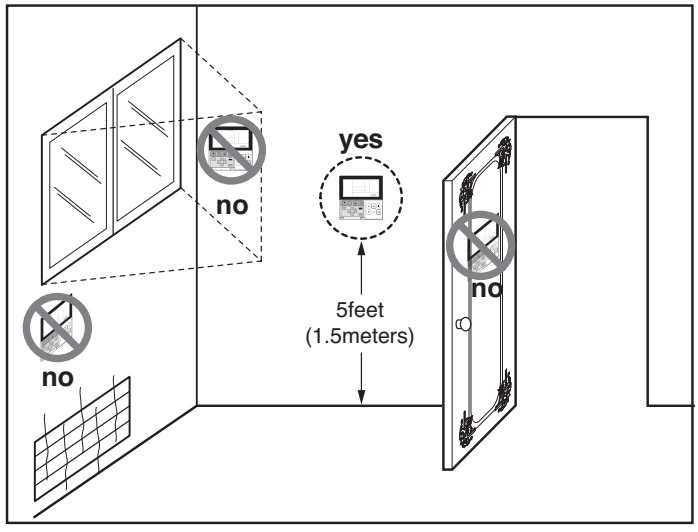

Fig.1 Typical locations for remote controller

11. Accessories

Standard Accessories

Name	Drain hose	Clamp metal	Washer for hanging backet	Clamp (Tie Wrap)	Insulation for fitting	(Other)
Quantity	1 EA	1 EA	8 EA	4 EA	1 SET	
Shape				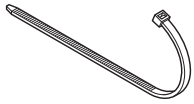	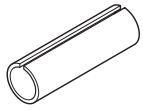 for gas pipe 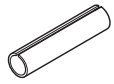 for liquid pipe	• Owner's manual • Installation manual

⚠ CAUTION

• Use only those accessories (Standard or optional) which have designated specifications.

MULTI V™ Indoor unit

Ceiling Concealed Duct (High Sensible)

1. List of functions

2. Specifications

3. Dimensions & Gravity point

4. Piping Diagrams

5. Wiring Diagrams

6. Capacity Tables

7. External Static Pressure(E.S.P) & Air Flow

8. Electric Characteristics

9. Sound Levels

10. Installation

11. Accessories

1. List of functions

Category	Function	ARNU07GBGA4, ARNU09GBGA4, ARNU12GBGA4, ARNU15GBGA4, ARNU18GBRA4, ARNU24GBRA4, ARNU28GBRA4, ARNU36GB8A4, ARNU42GB8A4, ARNU48GB8A4
Air flow	Air supply outlet	1
	Airflow direction control(left & right)	-
	Airflow direction control(up & down)	-
	Auto swing(left & right)	-
	Auto swing(up & down)	-
	Airflow steps(fan/cool/heat)	3 / 3 / 3
	Chaos swing	-
	Chaos wind(auto wind)	-
	Jet cool(Power wind)	-
	Swirl wind	-
Air purifying	Deodorizing filter	X
	Plasma air purifier	X
	Prefilter(washable / anti-fungus)	O
Installation	Drain pump	O
	E.S.P. control	O
	Electric heater(operation)	X
	High ceiling operation	-
Reliability	Hot start	O
	Self diagnosis	O
	Soft dry operation	O
Convenience	Auto changeover	O(Heat recovery)
	Auto cleaning	X
	Auto operation(artificial intelligence)	O(Heat pump or Cooling only)
	Auto restart operation	O
	Child lock	O
	Forced operation	-
	Group control	O
	Sleep mode	X
	Timer(on/off)	O
	Timer(weekly)	O
	Two thermistor control	O
	External On/Off	O
Individual control	Wide wired remote controller (RS2)	PQRCVSL0/PQRCVSL0QW
	Wide wired remote controller (RS2 Plus)	PREMTB001/PREMTBB01
	Premium wired remote controller	PREMTA000/PREMTA000A/PREMTA000B
	Simple wired remote controller	PQRCVCL0Q(W)
	Wired remote controller(for hotel use)	PQRCHCA0Q(W)
	Wireless LCD remote control	PQWRH(C)Q0FDB
Special function kit	Zone control	ABZCA
	CTIE	-
	Electro thermostat	-
	Remote temperature sensor	PQRSTA0
	Group control wire	PZCWRCG3
	Dry contact	PDRYCB000/PDRYCB100/PDRYCB300/PDRYCB400/PDRYCB500

O : Applied X : Not applied – : No relation

Option : Model name & price are different according to options, and assembled in factory with main unit.

Accessory : Installed at field, ordered and purchased separately by the corresponding model name, supplied with separate package.

2. Specifications

Type			Ceiling Concealed Duct - High Sensible		
Model		Unit	ARNU07GBGA4	ARNU09GBGA4	ARNU12GBGA4
Cooling Capacity		kW	2.2	2.8	3.6
		kcal/h	1,900	2,400	3,100
		Btu/h	7,500	9,600	12,300
Heating Capacity		kW	2.5	3.2	4.0
		kcal/h	2,200	2,800	3,400
		Btu/h	8,500	10,900	13,600
Casing			Galvanized Steel Plate	Galvanized Steel Plate	Galvanized Steel Plate
Dimensions(WxHxD)	Body	mm	1,182 x 298 x 450	1,182 x 298 x 450	1,182 x 298 x 450
		inch	46-17/32 x 11-23/32 x 17-23/32	46-17/32 x 11-23/32 x 17-23/32	46-17/32 x 11-23/32 x 17-23/32
Coil	Rows x Columns x FPI		3 x 12 x 21	3 x 12 x 21	3 x 12 x 21
	Face Area	m^2	0.26	0.26	0.26
Fan	Type		Sirocco Fan	Sirocco Fan	Sirocco Fan
	Motor Output x Number	W	350	350	350
	Running Current	A	2.65	2.65	2.65
	Air Flow Rate(H / M / L)	CMM	12.5 / 11.5 / 9.4	12.8 / 11.5 / 9.4	13.5 / 12.1 / 9.4
	(High Mode-factory set)	cfm	441 / 406 / 332	452 / 406 / 332	477 / 427 / 332
	External Static Pressure	mmAq(Pa)	6(59)	6(59)	6(59)
	Air Flow Rate(H / M / L)	CMM	14.6 / 13.7 / 12.3	15.1 / 13.7 / 12.3	16.6 / 15.1 / 13.7
	(Standard Mode)	cfm	516 / 484 / 434	533 / 484 / 434	586 / 533 / 484
	External Static Pressure	mmAq(Pa)	4(39)	4(39)	4(39)
	Drive		Direct	Direct	Direct
	Motor type		BLDC	BLDC	BLDC
Temperature Control			Microprocessor, Thermostat for cooling and heating	Microprocessor, Thermostat for cooling and heating	Microprocessor, Thermostat for cooling and heating
Sound Absorbing Thermal Insulation Material			Foamed polystrene	Foamed polystrene	Foamed polystrene
Air Filter			-	-	-
Safety Device			Fuse	Fuse	Fuse
Pipe Connections	Liquid Side	mm(inch)	Ø9.52(3/8)	Ø9.52(3/8)	Ø9.52(3/8)
	Gas Side	mm(inch)	Ø15.88(5/8)	Ø15.88(5/8)	Ø15.88(5/8)
	Drain Pipe(Internal Dia.)	mm(inch)	25(1)	25(1)	25(1)
Net Weight		kg(lbs)	38(83.8)	38(83.8)	38(83.8)
Noise Level(Sound Pressure, 1.5m, H / M / L)		dB(A)	31 / 30 / 29	32 / 31 / 29	32 / 31 / 30
Power Supply		Ø, V, Hz	1, 220-240, 50	1, 220-240, 50	1, 220-240, 50
			1, 220, 60	1, 220, 60	1, 220, 60
Refrigerant Control			EEV	EEV	EEV
Transmission cable		mm^2	CVV-SB 1.0~1.5 x 2C	CVV-SB 1.0~1.5 x 2C	CVV-SB 1.0~1.5 x 2C

Notes:

1. Capacities are based on the following conditions:
   - Cooling
     - Indoor temp. 27°C[80.6°F]DB/ 19°C[66.2°F]WB
     - Outdoor temp. 35°C[95°F]DB/ 24°C[75.2°F]WB
     - Interconnecting Piping Length 7.5m
     - Level Difference of Zero
   - Heating
     - Indoor temp. 20°C[68°F]DB/ 15°C[59°F]WB
     - Outdoor temp. 7°C[44.6°F]DB/ 6°C[42.8°F]WB
     - Interconnecting Piping Length 7.5m
     - Level Difference of Zero
2. Capacities are net capacities
3. Due to our policy of innovation some specifications may be changed without prior notification
4. Wiring cable size must comply with the applicable local and national codes. And “Electric characteristics” chapter should be considered for electrical work and design. Especially the power cable and circuit breaker should be selected in accordance with that.
5. EEV : Electronic Expansion Valve
6. Sound pressure levels are measured at 50Pa External Static Pressure condition.
7. Anechoic chamber conversion value is measured at 1.5 m downward from unit centre.
   The values depends on the ambient conditions and values are normally higher in actual operation.

Conversion Formula
kcal/h= kW x 860
Btu/h = kW x 3412
cfm = m^3/min x 35.3
l/s = CMM x 1000/60

2. Specifications

Type			Ceiling Concealed Duct - High Sensible		
Model		Unit	ARNU15GBGA4	ARNU18GBRA4	ARNU24GBRA4
Cooling Capacity		kW	4.5	5.6	7.1
		kcal/h	3,900	4,800	6,100
		Btu/h	15,400	19,100	24,200
Heating Capacity		kW	5	6.3	8.0
		kcal/h	4,300	5,400	6,900
		Btu/h	17,100	21,500	27,300
Casing			Galvanized Steel Plate	Galvanized Steel Plate	Galvanized Steel Plate
Dimensions(WxHxD)	Body	mm	1,182 x 298 x 450	1,230 x 590 x 380	1,230 x 590 x 380
		inch	46-17/32 x 11-23/32 x 17-23/32	48-7/16 x 14-31/32 x 23-7/32	48-7/16 x 14-31/32 x 23-7/32
Coil	Rows x Columns x FPI		3 x 12 x 21	3 x 16 x 19	3 x 16 x 19
	Face Area	m^2	0.26	0.38	0.38
Fan	Type		Sirocco Fan	Sirocco Fan	Sirocco Fan
	Motor Output x Number	W	350	185 x 2	185 x 2
	Running Current	A	2.65	2.4	2.40
	Air Flow Rate(H / M / L)	CMM	13.8 / 11.8 / 8.3	29.1 / 24.0 / 19.2	34.2 / 29.1 / 24.0
	(High Mode-factory set)	cfm	487 / 417 / 293	1,027 / 847 / 678	1,208 / 1,027 / 847
	External Static Pressure	mmAq(Pa)	8(78)	8(78)	8(78)
	Air Flow Rate(H / M / L)	CMM	13.5 / 12.1 / 9.0	31.7 / 27.4 / 23.2	35.9 / 31.7 / 27.4
	(Standard Mode)	cfm	477 / 427 / 318	1,119 / 969 / 819	1,269 / 1,119 / 969
	External Static Pressure	mmAq(Pa)	6(59)	6(59)	6(59)
	Drive		Direct	Direct	Direct
	Motor type		BLDC	BLDC	BLDC
Temperature Control			Microprocessor, Thermostat for cooling and heating	Microprocessor, Thermostat for cooling and heating	Microprocessor, Thermostat for cooling and heating
Sound Absorbing Thermal Insulation Material			Foamed polystrene	Foamed polystrene	Foamed polystrene
Air Filter			-	-	-
Safety Device			Fuse	Fuse	Fuse
Pipe Connections	Liquid Side	mm(inch)	Ø9.52(3/8)	Ø9.52(3/8)	Ø9.52(3/8)
	Gas Side	mm(inch)	Ø15.88(5/8)	Ø15.88(5/8)	Ø15.88(5/8)
	Drain Pipe(Internal Dia.)	mm(inch)	25(1)	25(1)	25(1)
Net Weight		kg(lbs)	38(83.8)	53(117)	53(117)
Noise Level(Sound Pressure, 1.5m, H / M / L)		dB(A)	33 / 32 / 31	43 / 42 / 41	44 / 43 / 42
Power Supply		Ø, V, Hz	1, 220-240, 50	1, 220-240, 50	1, 220-240, 50
			1, 220, 60	1, 220, 60	1, 220, 60
Refrigerant Control			EEV	EEV	EEV
Transmission cable		mm^2	CVV-SB 1.0~1.5 x 2C	CVV-SB 1.25 x 2C	CVV-SB 1.25 x 2C

Notes:

1. Capacities are based on the following conditions:
   - Cooling
     - Indoor temp. 27°C[80.6°F]DB/ 19°C[66.2°F]WB
     - Outdoor temp. 35°C[95°F]DB/ 24°C[75.2°F]WB
     - Interconnecting Piping Length 7.5m
     - Level Difference of Zero
   - Heating
     - Indoor temp. 20°C[68°F]DB/ 15°C[59°F]WB
     - Outdoor temp. 7°C[44.6°F]DB/ 6°C[42.8°F]WB
     - Interconnecting Piping Length 7.5m
     - Level Difference of Zero
2. Capacities are net capacities
3. Due to our policy of innovation some specifications may be changed without prior notification
4. Wiring cable size must comply with the applicable local and national codes. And “Electric characteristics” chapter should be considered for electrical work and design. Especially the power cable and circuit breaker should be selected in accordance with that.
5. EEV : Electronic Expansion Valve
6. Sound pressure levels are measured at 50Pa External Static Pressure condition.
7. Anechoic chamber conversion value is measured at 1.5 m downward from unit centre.
   The values depends on the ambient conditions and values are normally higher in actual operation.

Conversion Formula
kcal/h= kW x 860
Btu/h = kW x 3412
cfm = m^3/min x 35.3
l/s = CMM x 1000/60

2. Specifications

Type			Ceiling Concealed Duct - High Sensible		
Model		Unit	ARNU28GBRA4	ARNU36GB8A4	ARNU42GB8A4
Cooling Capacity		kW	8.2	10.6	12.3
		kcal/h	7,100	9,100	10,600
		Btu/h	28,000	36,200	42,000
Heating Capacity		kW	9.2	11.9	13.8
		kcal/h	8,000	10,200	11,000
		Btu/h	31,500	40,600	43,800
Casing			Galvanized Steel Plate	Galvanized Steel Plate	Galvanized Steel Plate
Dimensions(WxHxD)	Body	mm	1,230 x 380 x 590	1,562 x 460 x 688	1,562 x 460 x 688
		inch	48-7/16 x 14-31/32 x 23-7/32	61-1/2 x 18-1/8 x 27-3/32	61-1/2 x 18-1/8 x 27-3/32
Coil	Rows x Columns x FPI		3 x 13 x 19	3 x 21 x 19	3 x 21 x 19
	Face Area	m^2	0.38	0.59	0.59
Fan	Type		Sirocco Fan	Sirocco Fan	Sirocco Fan
	Motor Output x Number	W	185 x 2	375 x 2	375 x 2
	Running Current	A	2.40	5.12	5.12
	Air Flow Rate(H / M / L)	CMM	36.2 / 32.1 / 28.5	49.0 / 37.3 / 30.2	54.2 / 41.3 / 31.8
	(High Mode-factory set)	cfm	1,278 / 1,134 / 1,007	1,730 / 1,317 / 1,066	1,914 / 1,458 / 1,123
	External Static Pressure	mmAq(Pa)	14(137)	18(176)	18(176)
	Air Flow Rate(H / M / L)	CMM	32.6 / 31.3 / 30.4	53.7 / 49.5 / 43.9	55.6 / 50.6 / 45.0
	(Standard Mode)	cfm	1,151 / 1,105 / 1,074	1,896 / 1,748 / 1,550	1,963 / 1,786 / 1,589
	External Static Pressure	mmAq(Pa)	10(98)	9(88)	9(88)
	Drive		Direct	Direct	Direct
	Motor type		BLDC	BLDC	BLDC
Temperature Control			Microprocessor, Thermostat for cooling and heating	Microprocessor, Thermostat for cooling and heating	Microprocessor, Thermostat for cooling and heating
Sound Absorbing Thermal Insulation Material			Foamed polystrene	Foamed polystrene	Foamed polystrene
Air Filter			-	-	-
Safety Device			Fuse	Fuse	Fuse
Pipe Connections	Liquid Side	mm(inch)	Ø9.52(3/8)	Ø9.52(3/8)	Ø9.52(3/8)
	Gas Side	mm(inch)	Ø15.88(5/8)	Ø19.05(3/4)	Ø19.05(3/4)
	Drain Pipe(Internal Dia.)	mm(inch)	25(1)	25(1)	25(1)
Net Weight		kg(lbs)	53(117)	87(192)	87(192)
Noise Level(Sound Pressure, 1.5m, H / M / L)		dB(A)	41 / 40 / 39	46 / 45 / 42	47 / 46 / 43
Power Supply		Ø, V, Hz	1, 220-240, 50	1, 220-240, 50	1, 220-240, 50
			1, 220, 60	1, 220, 60	1, 220, 60
Refrigerant Control			EEV	EEV	EEV
Transmission cable		mm^2	CVV-SB 1.0-1.5 x 2C	CVV-SB 1.0~1.5 x 2C	CVV-SB 1.0~1.5 x 2C

Notes:

1. Capacities are based on the following conditions:
   - Cooling
     - Indoor temp. 27°C[80.6°F]DB/ 19°C[66.2°F]WB
     - Outdoor temp. 35°C[95°F]DB/ 24°C[75.2°F]WB
     - Interconnecting Piping Length 7.5m
     - Level Difference of Zero
   - Heating
     - Indoor temp. 20°C[68°F]DB/ 15°C[59°F]WB
     - Outdoor temp. 7°C[44.6°F]DB/ 6°C[42.8°F]WB
     - Interconnecting Piping Length 7.5m
     - Level Difference of Zero
2. Capacities are net capacities
3. Due to our policy of innovation some specifications may be changed without prior notification
4. Wiring cable size must comply with the applicable local and national codes. And “Electric characteristics” chapter should be considered for electrical work and design. Especially the power cable and circuit breaker should be selected in accordance with that.
5. EEV : Electronic Expansion Valve
6. Sound pressure levels are measured at 50Pa External Static Pressure condition.
7. Anechoic chamber conversion value is measured at 1.5 m downward from unit centre.
   The values depends on the ambient conditions and values are normally higher in actual operation.

Conversion Formula
kcal/h= kW x 860
Btu/h = kW x 3412
cfm = m^3/min x 35.3
l/s = CMM x 1000/60

2. Specifications

Type			Ceiling Concealed Duct - High Sensible
Model		Unit	ARNU48GB8A4
Cooling Capacity		kW	14.1
		kcal/h	12,100
		Btu/h	48,100
Heating Capacity		kW	15.9
		kcal/h	13,200
		Btu/h	51,200
Casing			Galvanized Steel Plate
Dimensions(WxHxD)	Body	mm	1,562 x 460 x 688
		inch	61-1/2 x 18-1/8 x 27-3/32
Coil	Rows x Columns x FPI		3 x 21 x 19
	Face Area	m^2	0.59
Fan	Type		Sirocco Fan
	Motor Output x Number	W	375 x 2
	Running Current	A	5.12
	Air Flow Rate(H / M / L)	CMM	57.2 / 43.0 / 34.0
	(High Mode-factory set)	cfm	2,019 / 1,518 / 1,200
	External Static Pressure	mmAq(Pa)	18(176)
	Air Flow Rate(H / M / L)	CMM	58.0 / 52.3 / 47.3
	(Standard Mode)	cfm	2,048 / 1,846 / 1,670
	External Static Pressure	mmAq(Pa)	9(88)
	Drive		Direct
	Motor type		BLDC
Temperature Control			Microprocessor, Thermostat for cooling and heating
Sound Absorbing Thermal Insulation Material			Foamed polystrene
Air Filter			-
Safety Device			Fuse
Pipe Connections	Liquid Side	mm(inch)	Ø9.52(3/8)
	Gas Side	mm(inch)	Ø19.05(3/4)
	Drain Pipe(Internal Dia.)	mm(inch)	25(1)
Net Weight		kg(lbs)	87(192)
Noise Level(Sound Pressure, 1.5m, H / M / L)		dB(A)	47 / 46 / 44
Power Supply		Ø, V, Hz	1, 220-240, 50
			1, 220, 60
Refrigerant Control			EEV
Transmission cable		mm^2	CVV-SB 1.0~1.5 x 2C

Notes:

1. Capacities are based on the following conditions:
   - Cooling
     - Indoor temp. 27°C[80.6°F]DB/ 19°C[66.2°F]WB
     - Outdoor temp. 35°C[95°F]DB/ 24°C[75.2°F]WB
     - Interconnecting Piping Length 7.5m
     - Level Difference of Zero
   - Heating
     - Indoor temp. 20°C[68°F]DB/ 15°C[59°F]WB
     - Outdoor temp. 7°C[44.6°F]DB/ 6°C[42.8°F]WB
     - Interconnecting Piping Length 7.5m
     - Level Difference of Zero
2. Capacities are net capacities
3. Due to our policy of innovation some specifications may be changed without prior notification
4. Wiring cable size must comply with the applicable local and national codes. And “Electric characteristics” chapter should be considered for electrical work and design. Especially the power cable and circuit breaker should be selected in accordance with that.
5. EEV : Electronic Expansion Valve
6. Sound pressure levels are measured at 50Pa External Static Pressure condition.
7. Anechoic chamber conversion value is measured at 1.5 m downward from unit centre.
   The values depends on the ambient conditions and values are normally higher in actual operation.

Conversion Formula
kcal/h= kW x 860
Btu/h = kW x 3412
cfm = m^3/min x 35.3
l/s = CMM x 1000/60

3. Dimensions & Gravity point

Ceiling Concealed Duct - High Sensible

ARNU07GBGA4
ARNU09GBGA4
ARNU12GBGA4
ARNU15GBGA4

(unit : mm)

Number	Name	Description
1	Liquid pipe connection	Unit size(7k~15k):ø9.52
2	Gas pipe connection	Unit size(7k~15k):ø15.88
3	Drain pipe connection	
4	Power supply connection	
5	Air discharge	
6	Air suction	

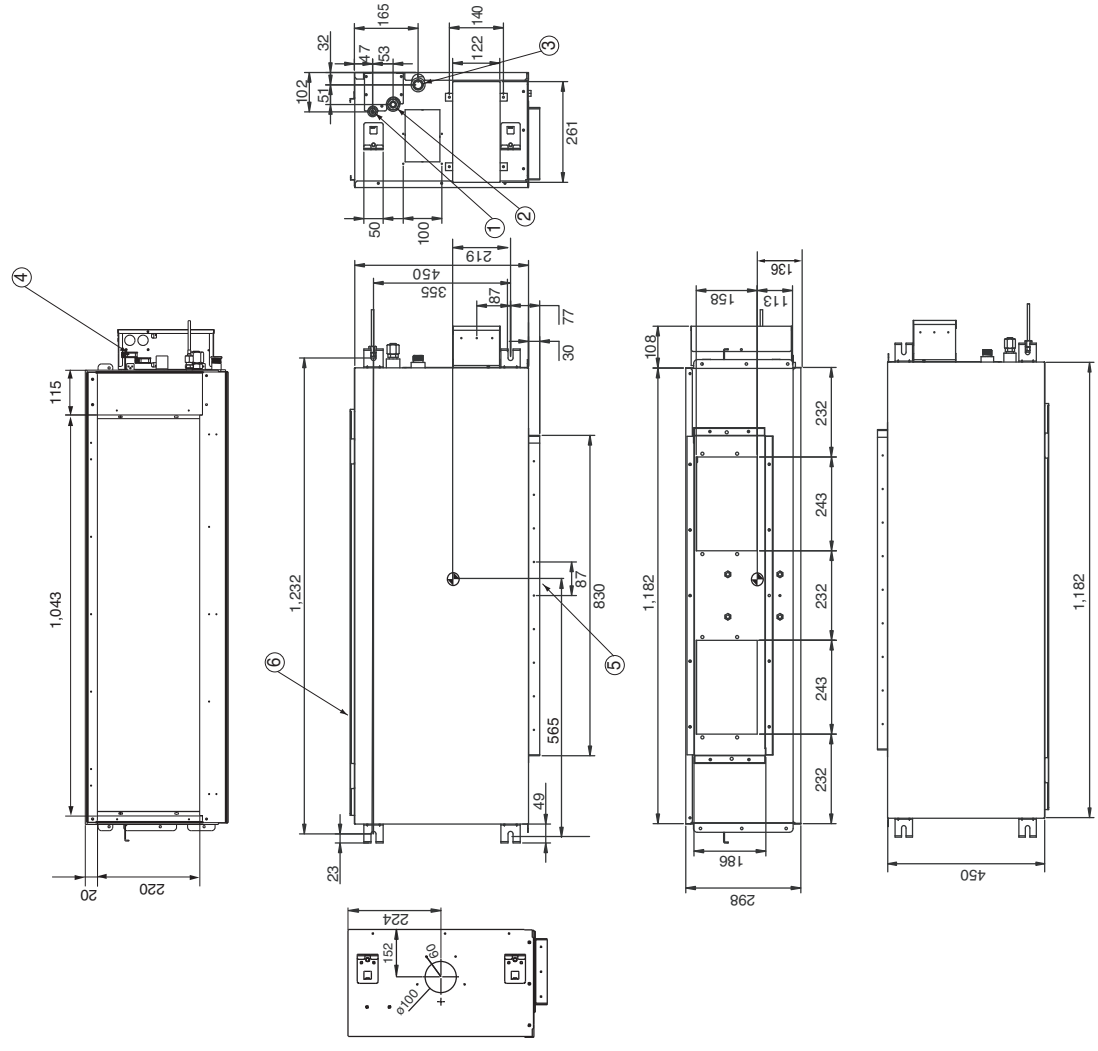

▣ Note

1. Unit should be installed in compliance with the installation manual in the product box.
2. Unit shall be grounded in accordance with the local regulations or applicable national codes.

Gravity point

LG Electronics

CHASSIS CODE: BG

3. Dimensions & Gravity point

Ceiling Concealed Duct - High Sensible

ARNU18GBRA4
ARNU24GBRA4
ARNU28GBRA4

(unit : mm)

Number	Name	Description
1	Liquid pipe connection	Unit size(18k,24k,28k):Ø9.52
2	Gas pipe connection	Unit size(18k,24k,28k):Ø15.88
3	Drain pipe connection	
4	Power supply connection	
5	Air discharge	
6	Air suction	

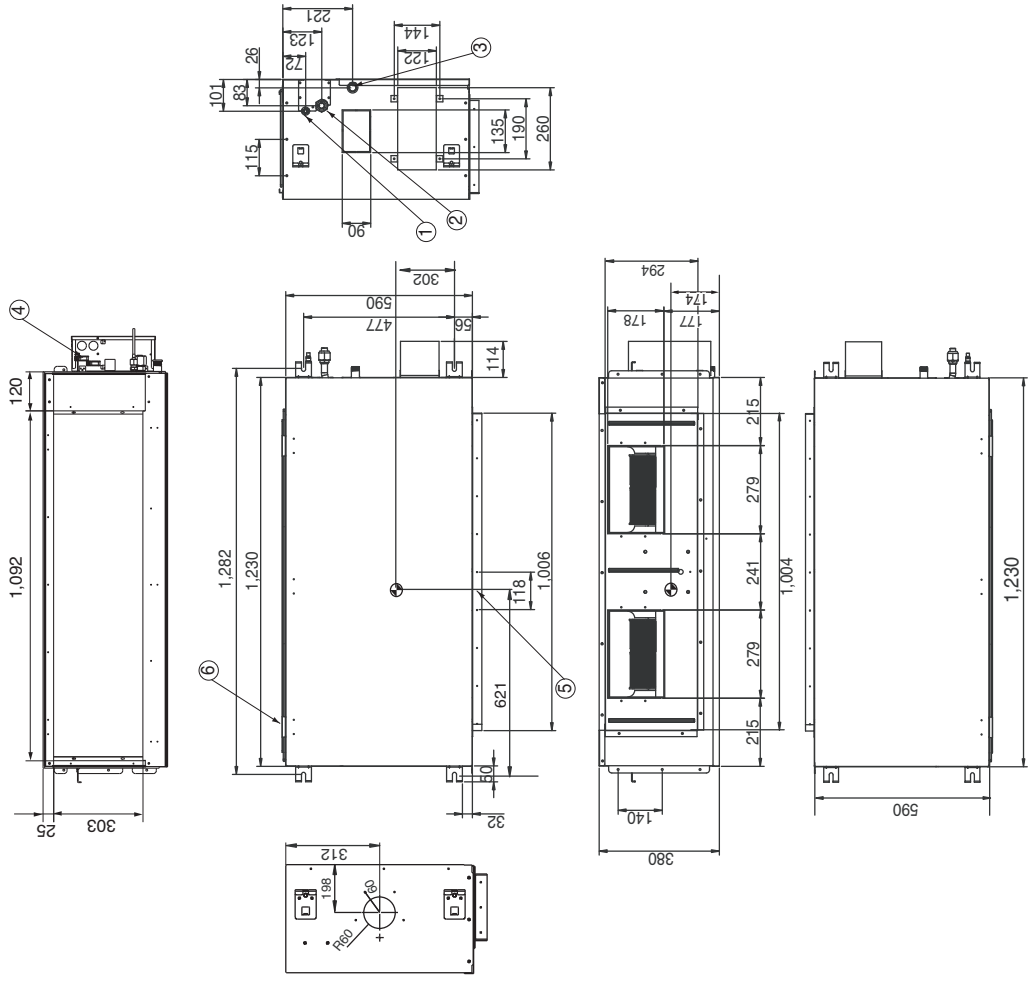

■ Note

1. Unit should be installed in compliance with the installation manual in the product box.
2. Unit shall be grounded in accordance with the local regulations or applicable national codes.

◔ Gravity point

LG Electronics

CHASSIS CODE: BR

3. Dimensions & Gravity point

Ceiling Concealed Duct - High Sensible

ARNU36GB8A4
ARNU42GB8A4
ARNU48GB8A4

(unit : mm)

Number	Name	Description
1	Liquid pipe connection	Unit size(36k, 42k, 48k):ø9.52
2	Gas pipe connection	Unit size(36k, 42k, 48k):ø19.05
3	Drain pipe connection	
4	Power supply connection	
5	Air discharge	
6	Air suction	

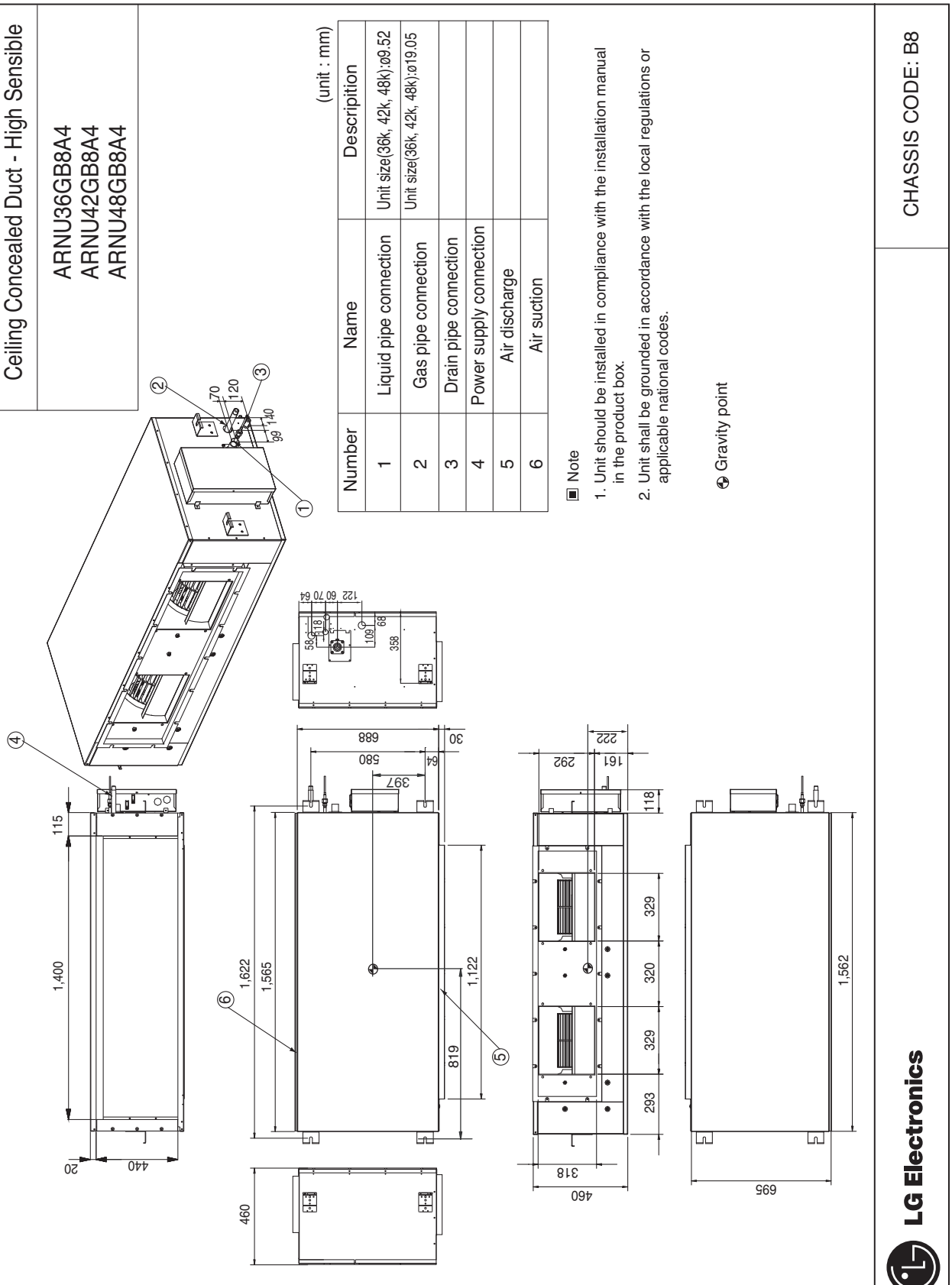

■ Note

1. Unit should be installed in compliance with the installation manual in the product box.
2. Unit shall be grounded in accordance with the local regulations or applicable national codes.

◔ Gravity point

LG Electronics

CHASSIS CODE: B8

4. Piping Diagrams

BG, BR Chassis

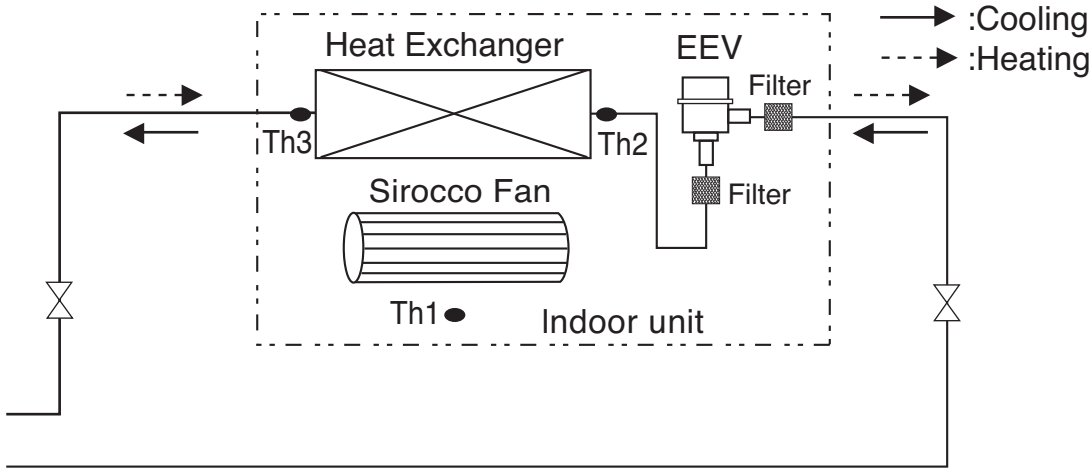

Refrigerant pipe connection port diameter

[Unit: mm(inch)]

MODEL	GAS	LIQUID
ARNU07GBGA4	Ø15.88(5/8)	Ø9.52(3/8)
ARNU09GBGA4	Ø15.88(5/8)	Ø9.52(3/8)
ARNU12GBGA4	Ø15.88(5/8)	Ø9.52(3/8)
ARNU15GBGA4	Ø15.88(5/8)	Ø9.52(3/8)
ARNU18GBRA4	Ø15.88(5/8)	Ø9.52(3/8)
ARNU24GBRA4	Ø15.88(5/8)	Ø9.52(3/8)
ARNU28GBRA4	Ø15.88(5/8)	Ø9.52(3/8)

LOC.	Description	PCB Connector (Color)
Th1	Thermistor for room air temperature	CN-ROOM (Yellow)
Th2	Thermistor for pipe in temperature	CN-PIPE_IN (White)
Th3	Thermistor for pipe out temperature	CN-PIPE_OUT (Red)

4. Piping Diagrams

B8 Chassis

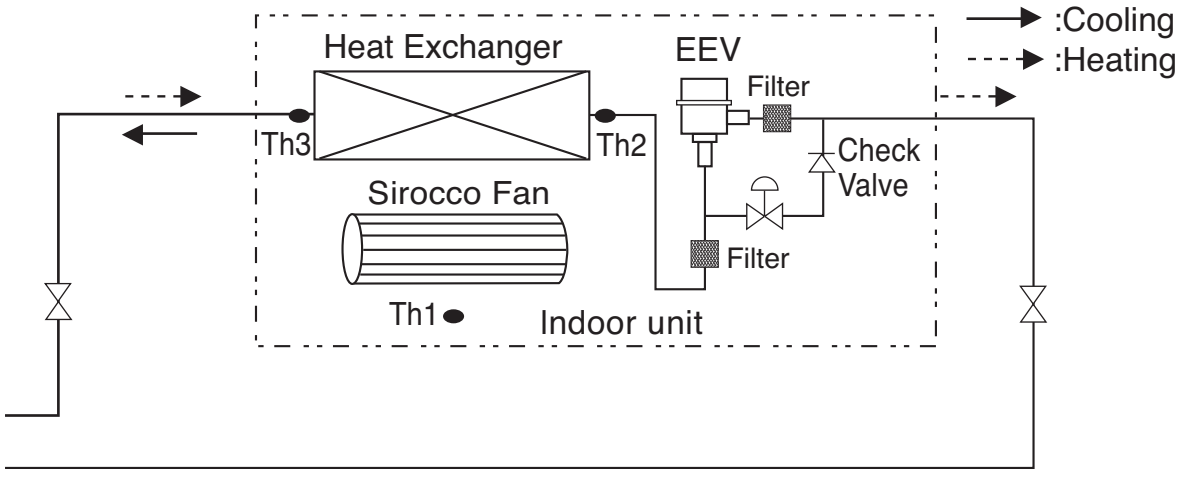

Refrigerant pipe connection port diameter

[Unit: mm(inch)]

MODEL	GAS	LIQUID
ARNU36GB8A4	Ø19.05(3/4)	Ø9.52(3/8)
ARNU42GB8A4	Ø19.05(3/4)	Ø9.52(3/8)
ARNU48GB8A4	Ø19.05(3/4)	Ø9.52(3/8)

* A : Global line-up, C : Brazil line-up only

LOC.	Description	PCB Connector (Color)
Th1	Thermistor for room air temperature	CN-ROOM (Yellow)
Th2	Thermistor for pipe in temperature	CN-PIPE_IN (White)
Th3	Thermistor for pipe out temperature	CN-PIPE_OUT (Red)

5. Wiring Diagrams

BG Chassis

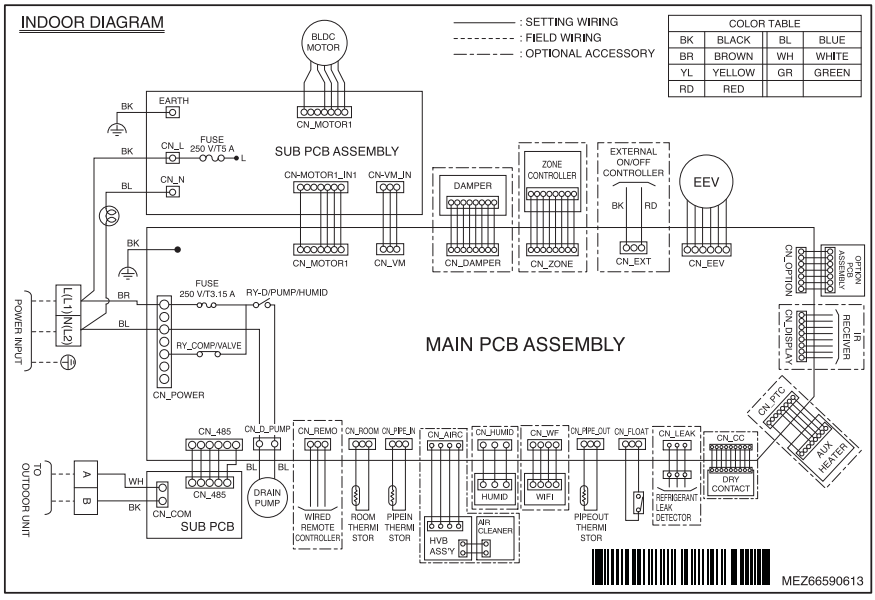

CONNECTOR NUMBER	LOCATION POINT	FUNCTION
CN-POWER	AC Power supply	AC Power line input for indoor controller
CN-MOTOR1	Fan motor output	Motor output of BLDC
CN-MOTOR2	Fan motor output	Motor output of BLDC
CN-D_PUMP	Drain pump output	AC output for drain pump
CN-COM	Communication	Connection between indoor and outdoor
CN-EEV	EEV Output	EEV Control output
CN-FLOAT	Float switch input	Float switch sensing
CN-PIPE_IN	Suction pipe sensor	Pipe in thermistor
CN-PIPE_OUT	Discharge pipe sensor	Pipe out thermistor
CN-ROOM	Room sensor	Room air thermistor
CN-REMO	Remote controller	Remote control line
CN-ZONE	Zontroller	Zone control line
CN-DISPLAY	RF Remote controller	RF Remote control line
CN-CC	Dry contact	Dry contact line
CN-EXT	External On/Off	External On/Off signal input

	Function	Description	Setting Off	Setting On	Default
SW1	Communication	N/A (Default)	-	-	Off
SW2	Cycle	N/A (Default)	-	-	Off
SW3	Group Control	Selection of Master or Slave	Master	Slave	Off
SW4	Dry Contact Mode	Selection of Dry Contact Mode	Wired/Wireless remote controller selection of Manual or Auto operation Mode	Auto	Off
SW5	Installation	Fan continuous operation	Continuous operation Removal	-	Off
SW6	Heater linkage	N/A	-	-	Off
SW7	Ventilator linkage	Selection of Ventilator linkage	Linkage Removal	Working	Off
	Vane selection (Console)	Selection of up/down side Vane	Up side + Down side Vane	Up side Vane Only	
	Region selection	Selection tropical region	General model	Tropical model	
SW8	Etc.	Spare	-	-	Off

⚠ CAUTION

For Multi V Models, DIP switch 1, 2, 6, 8 must be set OFF.

5. Wiring Diagrams

BR Chassis

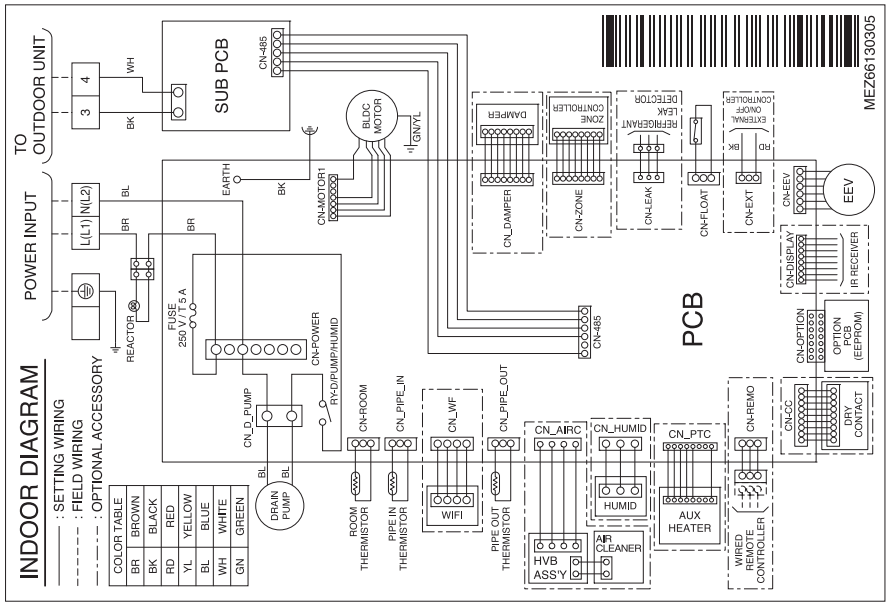

CONNECTOR NUMBER	LOCATION POINT	FUNCTION
CN-POWER	AC Power supply	AC Power line input for indoor controller
CN-MOTOR1	Fan motor output	Motor output of BLDC
CN-MOTOR2	Fan motor output	Motor output of BLDC
CN-D_PUMP	Drain pump output	AC output for drain pump
CN-COM	Communication	Connection between indoor and outdoor
CN-EEV	EEV Output	EEV Control output
CN-FLOAT	Float switch input	Float switch sensing
CN-PIPE_IN	Suction pipe sensor	Pipe in thermistor
CN-PIPE_OUT	Discharge pipe sensor	Pipe out thermistor
CN-ROOM	Room sensor	Room air thermistor
CN-REMO	Remote controller	Remote control line
CN-ZONE	Zontroller	Zone control line
CN-DISPLAY	RF Remote controller	RF Remote control line
CN-CC	Dry contact	Dry contact line
CN-EXT	External On/Off	External On/Off signal input

	Function	Description	Setting Off	Setting On	Default
SW1	Communication	N/A (Default)	-	-	Off
SW2	Cycle	N/A (Default)	-	-	Off
SW3	Group Control	Selection of Master or Slave	Master	Slave	Off
SW4	Dry Contact Mode	Selection of Dry Contact Mode	Wired/Wireless remote controller selection of Manual or Auto operation Mode	Auto	Off
SW5	Installation	Fan continuous operation	Continuous operation Removal	-	Off
SW6	Heater linkage	N/A	-	-	Off
SW7	Ventilator linkage	Selection of Ventilator linkage	Linkage Removal	Working	Off
	Vane selection (Console)	Selection of up/down side Vane	Up side + Down side Vane	Up side Vane Only	
	Region selection	Selection tropical region	General model	Tropical model	
SW8	Etc.	Spare	-	-	Off

⚠ CAUTION

For Multi V Models, DIP switch 1, 2, 6, 8 must be set OFF.

5. Wiring Diagrams

B8 Chassis

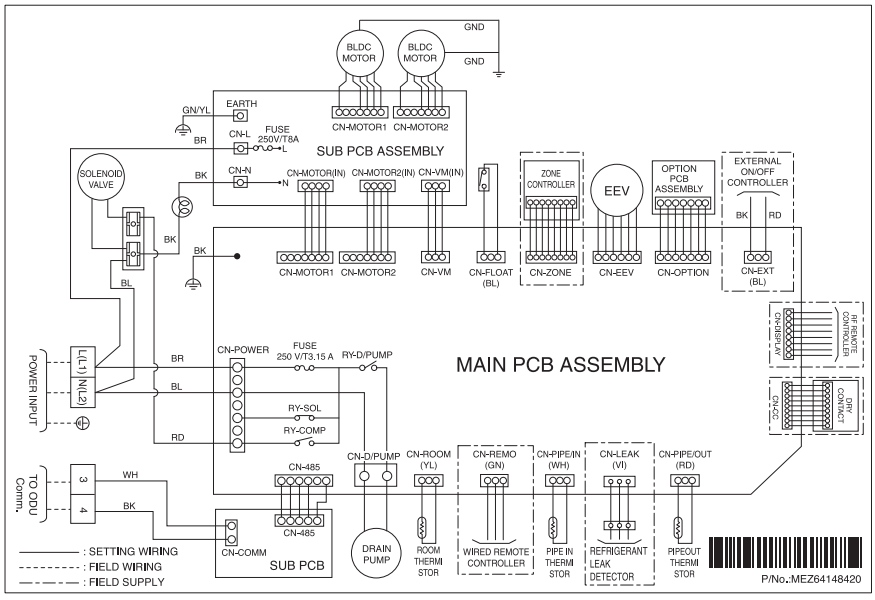

CONNECTOR NUMBER	LOCATION POINT	FUNCTION
CN-POWER	AC Power supply	AC Power line input for indoor controller
CN-MOTOR1, CN-MOTOR2	Fan motor output	Motor output of BLDC
CN-D/PUMP	Drain pump output	AC Output for drain pump
CN-COM	Communication	Connection between indoor and outdoor
CN-EEV	EEV Output	EEV Control output
CN-FLOAT	Float switch input	Float switch sensing
CN-PIPE/IN	Suction pipe sensor	Pipe in thermistor
CN-PIPE/OUT	Discharge pipe sensor	Pipe out thermistor
CN-ROOM	Room sensor	Room thermistor
CN-REMO	Remote controller	Remote control line
CN-CC	Dry contact	Dry contact line
CN-DISPLAY	RF Remocon	RF Remocon receiver
CN-OPTION	Option PCB	Option PCB connector
CN-ZONE	Zone controller	Zone controller line
CN-EXT	External On/Off	External On/Off signal input

	Function	Description	Setting Off	Setting On	Default
SW1	Communication	N/A (Default)	-	-	Off
SW2	Cycle	N/A (Default)	-	-	Off
SW3	Group Control	Selection of Master or Slave	Master	Slave	Off
SW4	Dry Contact Mode	Selection of Dry Contact Mode	Wired/Wireless remote controller selection of Manual or Auto operation Mode	Auto	Off
SW5	Installation	Fan continuous operation	Continuous operation Removal	-	Off
SW6	Heater linkage	N/A	-	-	Off
SW7	Ventilator linkage	Selection of Ventilator linkage	Linkage Removal	Working	Off
	Vane selection (Console)	Selection of up/down side Vane	Up side + Down side Vane	Up side Vane Only	
	Region selection	Selection tropical region	General model	Tropical model	
SW8	Etc.	Spare	-	-	Off

⚠ CAUTION

For Multi V Models, DIP switch 1, 2, 6, 8 must be set OFF.

6. Capacity Tables

6.1 Cooling Capacity

Cooling capacity

Capacity Index	Outdoor air temp. (DB, °C)	Indoor air temp. (DB/WB, °C)													
		20		23		26		27		28		30		32	
		14		16		18		19		20		22		24	
		TC	SHC	TC	SHC	TC	SHC	TC	SHC	TC	SHC	TC	SHC	TC	SHC
		kW	kW	kW	kW	kW	kW	kW	kW	kW	kW	kW	kW	kW	kW
2.2	10	1.5	1.4	1.8	1.5	2.0	1.7	2.2	1.7	2.4	1.8	2.6	1.8	2.9	1.8
	12	1.5	1.4	1.8	1.5	2.0	1.7	2.2	1.7	2.4	1.8	2.6	1.8	2.9	1.8
	14	1.5	1.4	1.8	1.5	2.0	1.7	2.2	1.7	2.4	1.8	2.6	1.8	2.8	1.8
	16	1.5	1.4	1.8	1.5	2.0	1.7	2.2	1.7	2.4	1.8	2.6	1.8	2.8	1.7
	18	1.5	1.4	1.8	1.5	2.0	1.7	2.2	1.7	2.4	1.8	2.6	1.8	2.7	1.7
	20	1.5	1.4	1.8	1.5	2.0	1.7	2.2	1.7	2.4	1.8	2.6	1.8	2.7	1.7
	21	1.5	1.4	1.8	1.5	2.0	1.7	2.2	1.7	2.4	1.8	2.6	1.8	2.7	1.7
	23	1.5	1.4	1.8	1.5	2.0	1.7	2.2	1.7	2.4	1.8	2.6	1.8	2.6	1.7
	25	1.5	1.4	1.8	1.5	2.0	1.7	2.2	1.7	2.4	1.8	2.6	1.8	2.6	1.6
	27	1.5	1.4	1.8	1.5	2.0	1.7	2.2	1.7	2.4	1.8	2.5	1.8	2.6	1.6
	29	1.5	1.4	1.8	1.5	2.0	1.7	2.2	1.7	2.4	1.8	2.5	1.7	2.5	1.6
	31	1.5	1.4	1.8	1.5	2.0	1.7	2.2	1.7	2.4	1.8	2.5	1.7	2.5	1.6
	33	1.5	1.4	1.8	1.5	2.0	1.7	2.2	1.7	2.4	1.8	2.4	1.7	2.4	1.5
	35	1.5	1.4	1.8	1.5	2.0	1.7	2.2	1.7	2.4	1.8	2.4	1.7	2.4	1.5
	37	1.5	1.4	1.8	1.5	2.0	1.7	2.2	1.7	2.3	1.7	2.3	1.6	2.4	1.5
	39	1.5	1.4	1.8	1.5	2.0	1.7	2.2	1.7	2.2	1.7	2.3	1.6	2.4	1.5
2.8	10	1.9	1.8	2.2	2.0	2.6	2.2	2.8	2.2	3.0	2.3	3.4	2.4	3.7	2.3
	12	1.9	1.8	2.2	2.0	2.6	2.2	2.8	2.2	3.0	2.3	3.4	2.4	3.6	2.3
	14	1.9	1.8	2.2	2.0	2.6	2.2	2.8	2.2	3.0	2.3	3.4	2.4	3.6	2.3
	16	1.9	1.8	2.2	2.0	2.6	2.2	2.8	2.2	3.0	2.3	3.4	2.4	3.5	2.2
	18	1.9	1.8	2.2	2.0	2.6	2.2	2.8	2.2	3.0	2.3	3.4	2.4	3.5	2.2
	20	1.9	1.8	2.2	2.0	2.6	2.2	2.8	2.2	3.0	2.3	3.4	2.4	3.4	2.2
	21	1.9	1.8	2.2	2.0	2.6	2.2	2.8	2.2	3.0	2.3	3.4	2.4	3.4	2.2
	23	1.9	1.8	2.2	2.0	2.6	2.2	2.8	2.2	3.0	2.3	3.4	2.4	3.4	2.2
	25	1.9	1.8	2.2	2.0	2.6	2.2	2.8	2.2	3.0	2.3	3.3	2.3	3.3	2.1
	27	1.9	1.8	2.2	2.0	2.6	2.2	2.8	2.2	3.0	2.3	3.2	2.3	3.3	2.1
	29	1.9	1.8	2.2	2.0	2.6	2.2	2.8	2.2	3.0	2.3	3.2	2.2	3.2	2.1
	31	1.9	1.8	2.2	2.0	2.6	2.2	2.8	2.2	3.0	2.3	3.2	2.2	3.2	2.0
	33	1.9	1.8	2.2	2.0	2.6	2.2	2.8	2.2	3.0	2.3	3.1	2.2	3.1	2.0
	35	1.9	1.8	2.2	2.0	2.6	2.2	2.8	2.2	3.0	2.3	3.0	2.2	3.1	2.0
	37	1.9	1.8	2.2	2.0	2.6	2.2	2.8	2.2	2.9	2.2	3.0	2.1	3.0	1.9
	39	1.9	1.8	2.2	2.0	2.6	2.2	2.8	2.2	2.8	2.2	2.9	2.1	3.0	1.9
3.6	10	2.4	2.3	2.9	2.5	3.3	2.7	3.6	2.8	3.9	2.9	4.3	3.0	4.7	3.0
	12	2.4	2.3	2.9	2.5	3.3	2.7	3.6	2.8	3.9	2.9	4.3	3.0	4.7	3.0
	14	2.4	2.3	2.9	2.5	3.3	2.7	3.6	2.8	3.9	2.9	4.3	3.0	4.6	2.9
	16	2.4	2.3	2.9	2.5	3.3	2.7	3.6	2.8	3.9	2.9	4.3	3.0	4.6	2.9
	18	2.4	2.3	2.9	2.5	3.3	2.7	3.6	2.8	3.9	2.9	4.3	3.0	4.5	2.9
	20	2.4	2.3	2.9	2.5	3.3	2.7	3.6	2.8	3.9	2.9	4.3	3.0	4.4	2.8
	21	2.4	2.3	2.9	2.5	3.3	2.7	3.6	2.8	3.9	2.9	4.3	3.0	4.4	2.8
	23	2.4	2.3	2.9	2.5	3.3	2.7	3.6	2.8	3.9	2.9	4.3	3.0	4.3	2.7
	25	2.4	2.3	2.9	2.5	3.3	2.7	3.6	2.8	3.9	2.9	4.3	3.0	4.3	2.7
	27	2.4	2.3	2.9	2.5	3.3	2.7	3.6	2.8	3.9	2.9	4.2	2.9	4.2	2.7
	29	2.4	2.3	2.9	2.5	3.3	2.7	3.6	2.8	3.9	2.9	4.1	2.9	4.2	2.6
	31	2.4	2.3	2.9	2.5	3.3	2.7	3.6	2.8	3.9	2.9	4.1	2.8	4.1	2.6
	33	2.4	2.3	2.9	2.5	3.3	2.7	3.6	2.8	3.9	2.9	4.0	2.8	4.0	2.5
	35	2.4	2.3	2.9	2.5	3.3	2.7	3.6	2.8	3.9	2.9	3.9	2.7	4.0	2.5
	37	2.4	2.3	2.9	2.5	3.3	2.7	3.6	2.8	3.8	2.8	3.8	2.7	3.9	2.5
	39	2.4	2.3	2.9	2.5	3.3	2.7	3.6	2.8	3.7	2.7	3.8	2.6	3.9	2.4

Notes:

TC: Total Capacity(kW)

SHC: Sensible Heat Capacity(kW)

1. Capacity tables show the representative value of conditions which may occur.
2. Refer to Capacity Correction Factor in the outdoor unit PDB for the actual performance data of each indoor unit and outdoor unit combination.

6. Capacity Tables

Cooling capacity

Capacity Index	Outdoor air temp. (DB, °C)	Indoor air temp. (DB/WB, °C)													
		20		23		26		27		28		30		32	
		14		16		18		19		20		22		24	
		TC	SHC	TC	SHC	TC	SHC	TC	SHC	TC	SHC	TC	SHC	TC	SHC
		kW	kW	kW	kW	kW	kW	kW	kW	kW	kW	kW	kW	kW	kW
4.5	10	3.0	2.9	3.6	3.2	4.2	3.4	4.5	3.5	4.8	3.6	5.4	3.8	5.9	3.7
	12	3.0	2.9	3.6	3.2	4.2	3.4	4.5	3.5	4.8	3.6	5.4	3.8	5.8	3.7
	14	3.0	2.9	3.6	3.2	4.2	3.4	4.5	3.5	4.8	3.6	5.4	3.8	5.8	3.6
	16	3.0	2.9	3.6	3.2	4.2	3.4	4.5	3.5	4.8	3.6	5.4	3.8	5.7	3.6
	18	3.0	2.9	3.6	3.2	4.2	3.4	4.5	3.5	4.8	3.6	5.4	3.8	5.6	3.6
	20	3.0	2.9	3.6	3.2	4.2	3.4	4.5	3.5	4.8	3.6	5.4	3.8	5.5	3.5
	21	3.0	2.9	3.6	3.2	4.2	3.4	4.5	3.5	4.8	3.6	5.4	3.8	5.5	3.5
	23	3.0	2.9	3.6	3.2	4.2	3.4	4.5	3.5	4.8	3.6	5.4	3.8	5.4	3.4
	25	3.0	2.9	3.6	3.2	4.2	3.4	4.5	3.5	4.8	3.6	5.3	3.7	5.3	3.4
	27	3.0	2.9	3.6	3.2	4.2	3.4	4.5	3.5	4.8	3.6	5.2	3.6	5.3	3.4
	29	3.0	2.9	3.6	3.2	4.2	3.4	4.5	3.5	4.8	3.6	5.1	3.6	5.2	3.3
	31	3.0	2.9	3.6	3.2	4.2	3.4	4.5	3.5	4.8	3.6	5.1	3.5	5.1	3.2
	33	3.0	2.9	3.6	3.2	4.2	3.4	4.5	3.5	4.8	3.6	4.9	3.5	5.0	3.2
	35	3.0	2.9	3.6	3.2	4.2	3.4	4.5	3.5	4.8	3.6	4.9	3.4	4.9	3.2
	37	3.0	2.9	3.6	3.2	4.2	3.4	4.5	3.5	4.7	3.5	4.8	3.4	4.9	3.1
	39	3.0	2.9	3.6	3.2	4.2	3.4	4.5	3.5	4.6	3.4	4.7	3.3	4.8	3.0
5.6	10	3.8	3.4	4.5	3.7	5.2	4.0	5.6	4.1	6.0	4.2	6.7	4.4	7.4	4.4
	12	3.8	3.4	4.5	3.7	5.2	4.0	5.6	4.1	6.0	4.2	6.7	4.4	7.3	4.3
	14	3.8	3.4	4.5	3.7	5.2	4.0	5.6	4.1	6.0	4.2	6.7	4.4	7.2	4.3
	16	3.8	3.4	4.5	3.7	5.2	4.0	5.6	4.1	6.0	4.2	6.7	4.4	7.1	4.2
	18	3.8	3.4	4.5	3.7	5.2	4.0	5.6	4.1	6.0	4.2	6.7	4.4	7.0	4.1
	20	3.8	3.4	4.5	3.7	5.2	4.0	5.6	4.1	6.0	4.2	6.7	4.4	6.9	4.1
	21	3.8	3.4	4.5	3.7	5.2	4.0	5.6	4.1	6.0	4.2	6.7	4.4	6.8	4.1
	23	3.8	3.4	4.5	3.7	5.2	4.0	5.6	4.1	6.0	4.2	6.7	4.4	6.7	4.0
	25	3.8	3.4	4.5	3.7	5.2	4.0	5.6	4.1	6.0	4.2	6.6	4.3	6.6	3.9
	27	3.8	3.4	4.5	3.7	5.2	4.0	5.6	4.1	6.0	4.2	6.4	4.2	6.6	3.9
	29	3.8	3.4	4.5	3.7	5.2	4.0	5.6	4.1	6.0	4.2	6.4	4.2	6.5	3.8
	31	3.8	3.4	4.5	3.7	5.2	4.0	5.6	4.1	6.0	4.2	6.3	4.1	6.4	3.8
	33	3.8	3.4	4.5	3.7	5.2	4.0	5.6	4.1	6.0	4.2	6.2	4.0	6.3	3.7
	35	3.8	3.4	4.5	3.7	5.2	4.0	5.6	4.1	6.0	4.2	6.0	4.0	6.2	3.6
	37	3.8	3.4	4.5	3.7	5.2	4.0	5.6	4.1	5.8	4.1	5.9	3.9	6.1	3.6
	39	3.8	3.4	4.5	3.7	5.2	4.0	5.6	4.1	5.7	4.0	5.8	3.8	6.0	3.5
7.1	10	4.8	4.8	5.7	6.1	6.6	6.7	7.1	6.8	7.6	7.1	8.5	7.3	9.3	7.2
	12	4.8	4.8	5.7	6.1	6.6	6.7	7.1	6.8	7.6	7.1	8.5	7.3	9.2	7.2
	14	4.8	4.8	5.7	6.1	6.6	6.7	7.1	6.8	7.6	7.1	8.5	7.3	9.1	7.1
	16	4.8	4.8	5.7	6.1	6.6	6.7	7.1	6.8	7.6	7.1	8.5	7.3	9.0	6.9
	18	4.8	4.8	5.7	6.1	6.6	6.7	7.1	6.8	7.6	7.1	8.5	7.3	8.8	6.9
	20	4.8	4.8	5.7	6.1	6.6	6.7	7.1	6.8	7.6	7.1	8.5	7.3	8.7	6.8
	21	4.8	4.8	5.7	6.1	6.6	6.7	7.1	6.8	7.6	7.1	8.5	7.3	8.7	6.8
	23	4.8	4.8	5.7	6.1	6.6	6.7	7.1	6.8	7.6	7.1	8.5	7.3	8.5	6.7
	25	4.8	4.8	5.7	6.1	6.6	6.7	7.1	6.8	7.6	7.1	8.4	7.2	8.4	6.5
	27	4.8	4.8	5.7	6.1	6.6	6.7	7.1	6.8	7.6	7.1	8.2	7.1	8.3	6.5
	29	4.8	4.8	5.7	6.1	6.6	6.7	7.1	6.8	7.6	7.1	8.1	6.9	8.2	6.4
	31	4.8	4.8	5.7	6.1	6.6	6.7	7.1	6.8	7.6	7.1	8.0	6.8	8.1	6.3
	33	4.8	4.8	5.7	6.1	6.6	6.7	7.1	6.8	7.6	7.1	7.8	6.8	7.9	6.1
	35	4.8	4.8	5.7	6.1	6.6	6.7	7.1	6.8	7.6	7.1	7.7	6.7	7.8	6.1
	37	4.8	4.8	5.7	6.1	6.6	6.7	7.1	6.8	7.4	6.8	7.5	6.5	7.7	6.0
	39	4.8	4.8	5.7	6.1	6.6	6.7	7.1	6.8	7.2	6.7	7.4	6.4	7.6	5.9

Notes:

TC: Total Capacity(kW)

SHC: Sensible Heat Capacity(kW)

1. Capacity tables show the representative value of conditions which may occur.
2. Refer to Capacity Correction Factor in the outdoor unit PDB for the actual performance data of each indoor unit and outdoor unit combination.

6. Capacity Tables

Cooling capacity

Capacity Index	Outdoor air temp. (DB, °C)	Indoor air temp. (DB/WB, °C)													
		20		23		26		27		28		30		32	
		14		16		18		19		20		22		24	
		TC	SHC	TC	SHC	TC	SHC	TC	SHC	TC	SHC	TC	SHC	TC	SHC
		kW	kW	kW	kW	kW	kW	kW	kW	kW	kW	kW	kW	kW	kW
8.2	10	5.5	5.0	6.6	5.5	7.7	6.0	8.2	6.1	8.7	6.2	9.8	6.5	10.8	6.5
	12	5.5	5.0	6.6	5.5	7.7	6.0	8.2	6.1	8.7	6.2	9.8	6.5	10.6	6.4
	14	5.5	5.0	6.6	5.5	7.7	6.0	8.2	6.1	8.7	6.2	9.8	6.5	10.5	6.3
	16	5.5	5.0	6.6	5.5	7.7	6.0	8.2	6.1	8.7	6.2	9.8	6.5	10.4	6.2
	18	5.5	5.0	6.6	5.5	7.7	6.0	8.2	6.1	8.7	6.2	9.8	6.5	10.2	6.1
	20	5.5	5.0	6.6	5.5	7.7	6.0	8.2	6.1	8.7	6.2	9.8	6.5	10.1	6.0
	21	5.5	5.0	6.6	5.5	7.7	6.0	8.2	6.1	8.7	6.2	9.8	6.5	10.0	6.0
	23	5.5	5.0	6.6	5.5	7.7	6.0	8.2	6.1	8.7	6.2	9.8	6.5	9.9	5.9
	25	5.5	5.0	6.6	5.5	7.7	6.0	8.2	6.1	8.7	6.2	9.7	6.4	9.7	5.8
	27	5.5	5.0	6.6	5.5	7.7	6.0	8.2	6.1	8.7	6.2	9.4	6.3	9.6	5.8
	29	5.5	5.0	6.6	5.5	7.7	6.0	8.2	6.1	8.7	6.2	9.3	6.2	9.5	5.7
	31	5.5	5.0	6.6	5.5	7.7	6.0	8.2	6.1	8.7	6.2	9.2	6.1	9.3	5.6
	33	5.5	5.0	6.6	5.5	7.7	6.0	8.2	6.1	8.7	6.2	9.0	6.0	9.2	5.5
	35	5.5	5.0	6.6	5.5	7.7	6.0	8.2	6.1	8.7	6.2	8.9	5.9	9.0	5.4
	37	5.5	5.0	6.6	5.5	7.7	6.0	8.2	6.1	8.5	6.1	8.7	5.8	8.9	5.3
	39	5.5	5.0	6.6	5.5	7.7	6.0	8.2	6.1	8.4	6.0	8.5	5.7	8.8	5.3
10.6	10	7.2	7.2	8.5	8.9	9.9	9.7	10.6	9.9	11.3	10.3	12.7	10.7	13.9	10.5
	12	7.2	7.2	8.5	8.9	9.9	9.7	10.6	9.9	11.3	10.3	12.7	10.7	13.7	10.5
	14	7.2	7.2	8.5	8.9	9.9	9.7	10.6	9.9	11.3	10.3	12.7	10.7	13.6	10.3
	16	7.2	7.2	8.5	8.9	9.9	9.7	10.6	9.9	11.3	10.3	12.7	10.7	13.4	10.1
	18	7.2	7.2	8.5	8.9	9.9	9.7	10.6	9.9	11.3	10.3	12.7	10.7	13.1	10.1
	20	7.2	7.2	8.5	8.9	9.9	9.7	10.6	9.9	11.3	10.3	12.7	10.7	13.0	9.9
	21	7.2	7.2	8.5	8.9	9.9	9.7	10.6	9.9	11.3	10.3	12.7	10.7	13.0	9.9
	23	7.2	7.2	8.5	8.9	9.9	9.7	10.6	9.9	11.3	10.3	12.7	10.7	12.7	9.7
	25	7.2	7.2	8.5	8.9	9.9	9.7	10.6	9.9	11.3	10.3	12.5	10.5	12.5	9.5
	27	7.2	7.2	8.5	8.9	9.9	9.7	10.6	9.9	11.3	10.3	12.2	10.3	12.4	9.5
	29	7.2	7.2	8.5	8.9	9.9	9.7	10.6	9.9	11.3	10.3	12.1	10.1	12.2	9.3
	31	7.2	7.2	8.5	8.9	9.9	9.7	10.6	9.9	11.3	10.3	11.9	9.9	12.1	9.1
	33	7.2	7.2	8.5	8.9	9.9	9.7	10.6	9.9	11.3	10.3	11.6	9.9	11.8	8.9
	35	7.2	7.2	8.5	8.9	9.9	9.7	10.6	9.9	11.3	10.3	11.5	9.7	11.6	8.9
	37	7.2	7.2	8.5	8.9	9.9	9.7	10.6	9.9	11.0	9.9	11.2	9.5	11.5	8.7
	39	7.2	7.2	8.5	8.9	9.9	9.7	10.6	9.9	10.7	9.7	11.0	9.3	11.3	8.6
12.3	10	8.3	8.3	9.9	10.5	11.4	11.4	12.3	11.6	13.2	12.0	14.7	12.5	16.1	12.3
	12	8.3	8.3	9.9	10.5	11.4	11.4	12.3	11.6	13.2	12.0	14.7	12.5	15.9	12.3
	14	8.3	8.3	9.9	10.5	11.4	11.4	12.3	11.6	13.2	12.0	14.7	12.5	15.8	12.0
	16	8.3	8.3	9.9	10.5	11.4	11.4	12.3	11.6	13.2	12.0	14.7	12.5	15.6	11.8
	18	8.3	8.3	9.9	10.5	11.4	11.4	12.3	11.6	13.2	12.0	14.7	12.5	15.2	11.8
	20	8.3	8.3	9.9	10.5	11.4	11.4	12.3	11.6	13.2	12.0	14.7	12.5	15.1	11.6
	21	8.3	8.3	9.9	10.5	11.4	11.4	12.3	11.6	13.2	12.0	14.7	12.5	15.1	11.6
	23	8.3	8.3	9.9	10.5	11.4	11.4	12.3	11.6	13.2	12.0	14.7	12.5	14.7	11.4
	25	8.3	8.3	9.9	10.5	11.4	11.4	12.3	11.6	13.2	12.0	14.6	12.3	14.6	11.1
	27	8.3	8.3	9.9	10.5	11.4	11.4	12.3	11.6	13.2	12.0	14.2	12.0	14.4	11.1
	29	8.3	8.3	9.9	10.5	11.4	11.4	12.3	11.6	13.2	12.0	14.0	11.8	14.2	10.9
	31	8.3	8.3	9.9	10.5	11.4	11.4	12.3	11.6	13.2	12.0	13.9	11.6	14.0	10.7
	33	8.3	8.3	9.9	10.5	11.4	11.4	12.3	11.6	13.2	12.0	13.5	11.6	13.7	10.5
	35	8.3	8.3	9.9	10.5	11.4	11.4	12.3	11.6	13.2	12.0	13.3	11.4	13.5	10.5
	37	8.3	8.3	9.9	10.5	11.4	11.4	12.3	11.6	12.8	11.6	13.0	11.1	13.3	10.2
	39	8.3	8.3	9.9	10.5	11.4	11.4	12.3	11.6	12.5	11.4	12.8	10.9	13.2	10.0

Notes:

TC: Total Capacity(kW) SHC: Sensible Heat Capacity(kW)

1. Capacity tables show the representative value of conditions which may occur.
2. Refer to Capacity Correction Factor in the outdoor unit PDB for the actual performance data of each indoor unit and outdoor unit combination.

6. Capacity Tables

Cooling capacity

Capacity Index	Outdoor air temp. (DB, °C)	Indoor air temp. (DB/WB, °C)													
		20		23		26		27		28		30		32	
		14		16		18		19		20		22		24	
		TC	SHC	TC	SHC	TC	SHC	TC	SHC	TC	SHC	TC	SHC	TC	SHC
		kW	kW	kW	kW	kW	kW	kW	kW	kW	kW	kW	kW	kW	kW
14.1	10	9.5	9.5	11.3	12.1	13.1	13.1	14.1	13.4	15.1	13.9	16.9	14.5	18.5	14.2
	12	9.5	9.5	11.3	12.1	13.1	13.1	14.1	13.4	15.1	13.9	16.9	14.5	18.3	14.2
	14	9.5	9.5	11.3	12.1	13.1	13.1	14.1	13.4	15.1	13.9	16.9	14.5	18.1	13.9
	16	9.5	9.5	11.3	12.1	13.1	13.1	14.1	13.4	15.1	13.9	16.9	14.5	17.9	13.7
	18	9.5	9.5	11.3	12.1	13.1	13.1	14.1	13.4	15.1	13.9	16.9	14.5	17.5	13.7
	20	9.5	9.5	11.3	12.1	13.1	13.1	14.1	13.4	15.1	13.9	16.9	14.5	17.3	13.4
	21	9.5	9.5	11.3	12.1	13.1	13.1	14.1	13.4	15.1	13.9	16.9	14.5	17.3	13.4
	23	9.5	9.5	11.3	12.1	13.1	13.1	14.1	13.4	15.1	13.9	16.9	14.5	16.9	13.1
	25	9.5	9.5	11.3	12.1	13.1	13.1	14.1	13.4	15.1	13.9	16.7	14.2	16.7	12.9
	27	9.5	9.5	11.3	12.1	13.1	13.1	14.1	13.4	15.1	13.9	16.3	13.9	16.5	12.9
	29	9.5	9.5	11.3	12.1	13.1	13.1	14.1	13.4	15.1	13.9	16.1	13.7	16.3	12.6
	31	9.5	9.5	11.3	12.1	13.1	13.1	14.1	13.4	15.1	13.9	15.9	13.4	16.1	12.4
	33	9.5	9.5	11.3	12.1	13.1	13.1	14.1	13.4	15.1	13.9	15.5	13.4	15.7	12.1
	35	9.5	9.5	11.3	12.1	13.1	13.1	14.1	13.4	15.1	13.9	15.3	13.1	15.5	12.1
	37	9.5	9.5	11.3	12.1	13.1	13.1	14.1	13.4	14.7	13.4	14.9	12.9	15.3	11.8
	39	9.5	9.5	11.3	12.1	13.1	13.1	14.1	13.4	14.3	13.1	14.7	12.6	15.1	11.6

Notes:

TC: Total Capacity(kW) SHC: Sensible Heat Capacity(kW)

1. Capacity tables show the representative value of conditions which may occur.
2. Refer to Capacity Correction Factor in the outdoor unit PDB for the actual performance data of each indoor unit and outdoor unit combination.

6. Capacity Tables

6.2 Heating Capacity

Heating capacity

Capacity Index	Outdoor air temp.		Indoor air temp. (DB, °C)					
			16	18	20	21	22	24
	DB(°C)	WB(°C)	TC	TC	TC	TC	TC	TC
			kW	kW	kW	kW	kW	kW
2.2	-24.8	-25.0	1.4	1.4	1.4	1.4	1.4	1.4
	-21.8	-22.0	1.7	1.7	1.7	1.7	1.7	1.7
	-19.8	-20.0	1.8	1.8	1.8	1.8	1.8	1.8
	-18.8	-19.0	1.9	1.9	1.9	1.9	1.9	1.9
	-16.7	-17.0	2.0	2.0	2.0	2.0	2.0	2.0
	-14.7	-15.0	2.1	2.1	2.1	2.1	2.1	2.0
	-12.6	-13.0	2.2	2.2	2.2	2.2	2.1	2.1
	-10.5	-11.0	2.3	2.3	2.2	2.2	2.2	2.2
	-9.5	-10.0	2.3	2.3	2.3	2.3	2.3	2.2
	-8.5	-9.1	2.3	2.3	2.3	2.3	2.3	2.2
	-7.0	-7.6	2.4	2.4	2.4	2.4	2.3	2.2
	-5.0	-5.6	2.5	2.5	2.5	2.4	2.3	2.2
	-3.0	-3.7	2.6	2.6	2.5	2.4	2.3	2.2
	0.0	-0.7	2.7	2.6	2.5	2.4	2.3	2.2
	3.0	2.2	2.7	2.7	2.5	2.4	2.3	2.2
	5.0	4.1	2.8	2.7	2.5	2.4	2.3	2.2
	7.0	6.0	2.8	2.7	2.5	2.4	2.3	2.2
	9.0	7.9	2.8	2.7	2.5	2.4	2.3	2.2
	11.0	9.8	2.8	2.7	2.5	2.4	2.3	2.2
	13.0	11.8	2.8	2.7	2.5	2.4	2.3	2.2
	15.0	13.7	2.8	2.7	2.5	2.4	2.3	2.2
2.8	-24.8	-25.0	1.9	1.9	1.8	1.8	1.8	1.8
	-21.8	-22.0	2.2	2.2	2.2	2.2	2.2	2.2
	-19.8	-20.0	2.4	2.4	2.3	2.3	2.3	2.3
	-18.8	-19.0	2.4	2.4	2.4	2.4	2.4	2.4
	-16.7	-17.0	2.5	2.5	2.5	2.5	2.5	2.5
	-14.7	-15.0	2.7	2.7	2.6	2.6	2.6	2.6
	-12.6	-13.0	2.8	2.8	2.8	2.8	2.7	2.7
	-10.5	-11.0	2.9	2.9	2.9	2.9	2.9	2.8
	-9.5	-10.0	3.0	3.0	2.9	2.9	2.9	2.8
	-8.5	-9.1	3.0	3.0	3.0	3.0	3.0	2.8
	-7.0	-7.6	3.1	3.1	3.1	3.1	3.0	2.8
	-5.0	-5.6	3.2	3.2	3.2	3.1	3.0	2.8
	-3.0	-3.7	3.4	3.3	3.2	3.1	3.0	2.8
	0.0	-0.7	3.4	3.3	3.2	3.1	3.0	2.8
	3.0	2.2	3.5	3.4	3.2	3.1	3.0	2.8
	5.0	4.1	3.6	3.4	3.2	3.1	3.0	2.8
	7.0	6.0	3.6	3.4	3.2	3.1	3.0	2.8
	9.0	7.9	3.6	3.4	3.2	3.1	3.0	2.8
	11.0	9.8	3.6	3.4	3.2	3.1	3.0	2.8
	13.0	11.8	3.6	3.4	3.2	3.1	3.0	2.8
	15.0	13.7	3.6	3.4	3.2	3.1	3.0	2.8
3.6	-24.8	-25.0	2.3	2.3	2.3	2.3	2.3	2.3
	-21.8	-22.0	2.8	2.8	2.8	2.8	2.8	2.8
	-19.8	-20.0	2.9	2.9	2.9	2.9	2.9	2.9
	-18.8	-19.0	3.0	3.0	3.0	3.0	3.0	3.0
	-16.7	-17.0	3.1	3.1	3.1	3.1	3.1	3.1
	-14.7	-15.0	3.3	3.3	3.3	3.3	3.3	3.3
	-12.6	-13.0	3.5	3.4	3.4	3.4	3.4	3.4
	-10.5	-11.0	3.6	3.6	3.6	3.6	3.6	3.5
	-9.5	-10.0	3.7	3.7	3.7	3.7	3.7	3.5
	-8.5	-9.1	3.8	3.8	3.7	3.7	3.7	3.5
	-7.0	-7.6	3.9	3.9	3.9	3.8	3.7	3.5
	-5.0	-5.6	4.0	4.0	4.0	3.9	3.7	3.5
	-3.0	-3.7	4.2	4.1	4.0	3.9	3.7	3.5
	0.0	-0.7	4.3	4.1	4.0	3.9	3.7	3.5
	3.0	2.2	4.4	4.3	4.0	3.9	3.7	3.5
	5.0	4.1	4.5	4.3	4.0	3.9	3.7	3.5
	7.0	6.0	4.5	4.3	4.0	3.9	3.7	3.5
	9.0	7.9	4.5	4.3	4.0	3.9	3.7	3.5
	11.0	9.8	4.5	4.3	4.0	3.9	3.7	3.5
	13.0	11.8	4.5	4.3	4.0	3.9	3.7	3.5
	15.0	13.7	4.5	4.3	4.0	3.9	3.7	3.5

Notes:
TC: Total Capacity(kW)
1. Capacity tables show the representative value of conditions which may occur.
2. is shown as reference. When selecting the outdoor units, avoid the outdoor air temperature range shown by .
3. In accordance with operation limits of outdoor unit, applicable range of capacity tables is different.
4. Refer to Capacity Correction Factor in the outdoor unit PDB for the actual performance data of each indoor unit and outdoor unit combination.

6. Capacity Tables

Heating capacity

Capacity Index	Outdoor air temp.		Indoor air temp. (DB, °C)					
			16	18	20	21	22	24
	DB(°C)	WB(°C)	TC	TC	TC	TC	TC	TC
			kW	kW	kW	kW	kW	kW
4.5	-24.8	-25.0	2.9	2.9	2.9	2.9	2.9	2.9
	-21.8	-22.0	3.5	3.5	3.5	3.5	3.5	3.5
	-19.8	-20.0	3.7	3.7	3.7	3.7	3.7	3.6
	-18.8	-19.0	3.8	3.7	3.7	3.7	3.7	3.7
	-16.7	-17.0	3.9	3.9	3.9	3.9	3.9	3.9
	-14.7	-15.0	4.1	4.1	4.1	4.1	4.1	4.1
	-12.6	-13.0	4.3	4.3	4.3	4.3	4.3	4.3
	-10.5	-11.0	4.5	4.5	4.5	4.5	4.5	4.4
	-9.5	-10.0	4.6	4.6	4.6	4.6	4.6	4.4
	-8.5	-9.1	4.7	4.7	4.7	4.7	4.7	4.4
	-7.0	-7.6	4.8	4.8	4.8	4.8	4.7	4.4
	-5.0	-5.6	5.0	5.0	5.0	4.8	4.7	4.4
	-3.0	-3.7	5.3	5.1	5.0	4.8	4.7	4.4
	0.0	-0.7	5.3	5.2	5.0	4.8	4.7	4.4
	3.0	2.2	5.5	5.3	5.0	4.8	4.7	4.4
	5.0	4.1	5.6	5.3	5.0	4.8	4.7	4.4
	7.0	6.0	5.6	5.3	5.0	4.8	4.7	4.4
	9.0	7.9	5.6	5.3	5.0	4.8	4.7	4.4
	11.0	9.8	5.6	5.3	5.0	4.8	4.7	4.4
	13.0	11.8	5.6	5.3	5.0	4.8	4.7	4.4
	15.0	13.7	5.6	5.3	5.0	4.8	4.7	4.4
5.6	-24.8	-25.0	3.6	3.6	3.6	3.6	3.6	3.6
	-21.8	-22.0	4.4	4.4	4.4	4.4	4.4	4.4
	-19.8	-20.0	4.6	4.6	4.6	4.6	4.6	4.6
	-18.8	-19.0	4.8	4.7	4.7	4.7	4.7	4.7
	-16.7	-17.0	5.0	5.0	5.0	4.9	4.9	4.9
	-14.7	-15.0	5.2	5.2	5.2	5.2	5.2	5.2
	-12.6	-13.0	5.5	5.4	5.4	5.4	5.4	5.4
	-10.5	-11.0	5.7	5.7	5.7	5.7	5.7	5.5
	-9.5	-10.0	5.8	5.8	5.8	5.8	5.8	5.5
	-8.5	-9.1	5.9	5.9	5.9	5.9	5.9	5.5
	-7.0	-7.6	6.1	6.1	6.1	6.0	5.9	5.5
	-5.0	-5.6	6.3	6.3	6.3	6.1	5.9	5.5
	-3.0	-3.7	6.6	6.5	6.3	6.1	5.9	5.5
	0.0	-0.7	6.7	6.5	6.3	6.1	5.9	5.5
	3.0	2.2	6.9	6.7	6.3	6.1	5.9	5.5
	5.0	4.1	7.0	6.7	6.3	6.1	5.9	5.5
	7.0	6.0	7.1	6.7	6.3	6.1	5.9	5.5
	9.0	7.9	7.1	6.7	6.3	6.1	5.9	5.5
	11.0	9.8	7.1	6.7	6.3	6.1	5.9	5.5
	13.0	11.8	7.1	6.7	6.3	6.1	5.9	5.5
	15.0	13.7	7.1	6.7	6.3	6.1	5.9	5.5
7.1	-24.8	-25.0	4.6	4.6	4.6	4.6	4.6	4.6
	-21.8	-22.0	5.6	5.6	5.6	5.6	5.6	5.5
	-19.8	-20.0	5.9	5.9	5.9	5.9	5.9	5.8
	-18.8	-19.0	6.0	6.0	6.0	6.0	6.0	6.0
	-16.7	-17.0	6.3	6.3	6.3	6.3	6.3	6.3
	-14.7	-15.0	6.6	6.6	6.6	6.6	6.6	6.6
	-12.6	-13.0	6.9	6.9	6.9	6.9	6.9	6.9
	-10.5	-11.0	7.2	7.2	7.2	7.2	7.2	7.0
	-9.5	-10.0	7.4	7.4	7.3	7.3	7.3	7.0
	-8.5	-9.1	7.5	7.5	7.5	7.5	7.5	7.0
	-7.0	-7.6	7.7	7.7	7.7	7.7	7.5	7.0
	-5.0	-5.6	8.0	8.0	8.0	7.7	7.5	7.0
	-3.0	-3.7	8.4	8.2	8.0	7.7	7.5	7.0
	0.0	-0.7	8.6	8.3	8.0	7.7	7.5	7.0
	3.0	2.2	8.8	8.5	8.0	7.7	7.5	7.0
	5.0	4.1	8.9	8.5	8.0	7.7	7.5	7.0
	7.0	6.0	9.0	8.5	8.0	7.7	7.5	7.0
	9.0	7.9	9.0	8.5	8.0	7.7	7.5	7.0
	11.0	9.8	9.0	8.5	8.0	7.7	7.5	7.0
	13.0	11.8	9.0	8.5	8.0	7.7	7.5	7.0
	15.0	13.7	9.0	8.5	8.0	7.7	7.5	7.0

Notes:

TC: Total Capacity(kW)

1. Capacity tables show the representative value of conditions which may occur.
2. is shown as reference. When selecting the outdoor units, avoid the outdoor air temperature range shown by .
3. In accordance with operation limits of outdoor unit, applicable range of capacity tables is different.
4. Refer to Capacity Correction Factor in the outdoor unit PDB for the actual performance data of each indoor unit and outdoor unit combination.

6. Capacity Tables

Heating capacity

Capacity Index	Outdoor air temp.		Indoor air temp. (DB, °C)					
			16	18	20	21	22	24
	DB(°C)	WB(°C)	TC	TC	TC	TC	TC	TC
			kW	kW	kW	kW	kW	kW
8.2	-24.8	-25.0	5.3	5.3	5.3	5.3	5.3	5.3
	-21.8	-22.0	6.4	6.4	6.4	6.4	6.4	6.4
	-19.8	-20.0	6.8	6.8	6.7	6.7	6.7	6.7
	-18.8	-19.0	6.9	6.9	6.9	6.9	6.9	6.9
	-16.7	-17.0	7.2	6.9	7.2	7.2	7.2	7.2
	-14.7	-15.0	7.6	6.9	7.6	7.6	7.6	7.5
	-12.6	-13.0	8.0	6.9	7.9	7.9	7.9	7.9
	-10.5	-11.0	8.3	6.9	8.3	8.3	8.3	8.0
	-9.5	-10.0	8.5	6.9	8.4	8.4	8.4	8.0
	-8.5	-9.1	8.6	6.9	8.6	8.6	8.6	8.0
	-7.0	-7.6	8.9	6.9	8.9	8.8	8.6	8.0
	-5.0	-5.6	9.2	6.9	9.2	8.9	8.6	8.0
	-3.0	-3.7	9.7	6.9	9.2	8.9	8.6	8.0
	0.0	-0.7	9.8	6.9	9.2	8.9	8.6	8.0
	3.0	2.2	10.1	6.9	9.2	8.9	8.6	8.0
	5.0	4.1	10.3	6.9	9.2	8.9	8.6	8.0
	7.0	6.0	10.4	6.9	9.2	8.9	8.6	8.0
	9.0	7.9	10.4	6.9	9.2	8.9	8.6	8.0
	11.0	9.8	10.4	6.9	9.2	8.9	8.6	8.0
	13.0	11.8	10.4	6.9	9.2	8.9	8.6	8.0
	15.0	13.7	10.4	6.9	9.2	8.9	8.6	8.0
10.6	-24.8	-25.0	6.9	6.9	6.8	6.8	6.8	6.8
	-21.8	-22.0	8.3	8.3	8.3	8.3	8.3	8.2
	-19.8	-20.0	8.8	8.8	8.7	8.7	8.7	8.6
	-18.8	-19.0	9.0	8.9	8.9	8.9	8.9	8.9
	-16.7	-17.0	9.4	9.4	9.4	9.3	9.3	9.3
	-14.7	-15.0	9.9	9.9	9.8	9.8	9.8	9.8
	-12.6	-13.0	10.3	10.3	10.3	10.3	10.2	10.2
	-10.5	-11.0	10.8	10.8	10.7	10.7	10.7	10.4
	-9.5	-10.0	11.0	11.0	10.9	10.9	10.9	10.4
	-8.5	-9.1	11.2	11.2	11.1	11.1	11.1	10.4
	-7.0	-7.6	11.5	11.5	11.5	11.4	11.1	10.4
	-5.0	-5.6	12.0	11.9	11.9	11.5	11.1	10.4
	-3.0	-3.7	12.5	12.2	11.9	11.5	11.1	10.4
	0.0	-0.7	12.7	12.3	11.9	11.5	11.1	10.4
	3.0	2.2	13.1	12.7	11.9	11.5	11.1	10.4
	5.0	4.1	13.3	12.7	11.9	11.5	11.1	10.4
	7.0	6.0	13.4	12.7	11.9	11.5	11.1	10.4
	9.0	7.9	13.4	12.7	11.9	11.5	11.1	10.4
	11.0	9.8	13.4	12.7	11.9	11.5	11.1	10.4
	13.0	11.8	13.4	12.7	11.9	11.5	11.1	10.4
	15.0	13.7	13.4	12.7	11.9	11.5	11.1	10.4
12.3	-24.8	-25.0	8.0	8.0	7.9	7.9	7.9	7.9
	-21.8	-22.0	9.7	9.7	9.6	9.6	9.6	9.5
	-19.8	-20.0	10.2	10.2	10.1	10.1	10.1	10.0
	-18.8	-19.0	10.4	10.3	10.3	10.3	10.3	10.3
	-16.7	-17.0	10.9	10.9	10.9	10.8	10.8	10.8
	-14.7	-15.0	11.4	11.4	11.4	11.4	11.4	11.3
	-12.6	-13.0	12.0	11.9	11.9	11.9	11.8	11.8
	-10.5	-11.0	12.5	12.5	12.4	12.4	12.4	12.0
	-9.5	-10.0	12.7	12.7	12.7	12.7	12.7	12.0
	-8.5	-9.1	13.0	13.0	12.9	12.9	12.9	12.0
	-7.0	-7.6	13.3	13.3	13.3	13.2	12.9	12.0
	-5.0	-5.6	13.9	13.8	13.8	13.4	12.9	12.0
	-3.0	-3.7	14.5	14.2	13.8	13.4	12.9	12.0
	0.0	-0.7	14.8	14.3	13.8	13.4	12.9	12.0
	3.0	2.2	15.2	14.7	13.8	13.4	12.9	12.0
	5.0	4.1	15.4	14.7	13.8	13.4	12.9	12.0
	7.0	6.0	15.6	14.7	13.8	13.4	12.9	12.0
	9.0	7.9	15.6	14.7	13.8	13.4	12.9	12.0
	11.0	9.8	15.6	14.7	13.8	13.4	12.9	12.0
	13.0	11.8	15.6	14.7	13.8	13.4	12.9	12.0
	15.0	13.7	15.6	14.7	13.8	13.4	12.9	12.0

Notes:

TC: Total Capacity(kW)

1. Capacity tables show the representative value of conditions which may occur.
2. is shown as reference. When selecting the outdoor units, avoid the outdoor air temperature range shown by .
3. In accordance with operation limits of outdoor unit, applicable range of capacity tables is different.
4. Refer to Capacity Correction Factor in the outdoor unit PDB for the actual performance data of each indoor unit and outdoor unit combination.

6. Capacity Tables

Heating capacity

Capacity Index	Outdoor air temp.		Indoor air temp. (DB, °C)					
			16	18	20	21	22	24
	DB(°C)	WB(°C)	TC	TC	TC	TC	TC	TC
			kW	kW	kW	kW	kW	kW
14.1	-24.8	-25	9.2	9.2	9.1	9.1	9.1	9.1
	-21.8	-22	11.1	11.1	11.1	11.1	11.1	11.0
	-19.8	-20	11.7	11.7	11.6	11.6	11.6	11.6
	-18.8	-19	12.0	11.9	11.9	11.9	11.9	11.9
	-16.7	-17	12.5	12.5	12.5	12.4	12.4	12.4
	-14.7	-15	13.2	13.2	13.1	13.1	13.1	13.0
	-12.6	-13	13.8	13.7	13.7	13.7	13.6	13.6
	-10.5	-11	14.4	14.4	14.3	14.3	14.3	13.9
	-9.5	-10	14.7	14.7	14.6	14.6	14.6	13.9
	-8.5	-9.1	14.9	14.9	14.9	14.9	14.9	13.9
	-7	-7.6	15.4	15.3	15.3	15.2	14.9	13.9
	-5	-5.6	16.0	15.9	15.9	15.4	14.9	13.9
	-3	-3.7	16.7	16.3	15.9	15.4	14.9	13.9
	0	-0.7	17.0	16.5	15.9	15.4	14.9	13.9
	3	2.2	17.5	16.9	15.9	15.4	14.9	13.9
	5	4.1	17.7	16.9	15.9	15.4	14.9	13.9
	7	6	17.9	16.9	15.9	15.4	14.9	13.9
	9	7.9	17.9	16.9	15.9	15.4	14.9	13.9
	11	9.8	17.9	16.9	15.9	15.4	14.9	13.9
	13	11.8	17.9	16.9	15.9	15.4	14.9	13.9
	15	13.7	17.9	16.9	15.9	15.4	14.9	13.9

Notes:
TC: Total Capacity(kW)
1. Capacity tables show the representative value of conditions which may occur.
2. is shown as reference. When selecting the outdoor units, avoid the outdoor air temperature range shown by .
3. In accordance with operation limits of outdoor unit, applicable range of capacity tables is different.
4. Refer to Capacity Correction Factor in the outdoor unit PDB for the actual performance data of each indoor unit and outdoor unit combination.

7. External Static Pressure (E.S.P) & Air Flow

ARNU07GBGA4, ARNU09GBGA4, ARNU12GBGA4, ARNU15GBGA4

(Unit: CMM)

Setting Value	Static Pressure(mmAq(Pa))											
	3(29)	4(39)	5(49)	6(59)	7(69)	8(78)	9(88)	10(98)	12(118)	14(137)	16(157)	18(177)
70	9.6	5.2	-	-	-	-	-	-	-	-	-	-
80	14.4	10.6	4.0	-	-	-	-	-	-	-	-	-
90	18.6	14.2	12.1	9.3	4.1	-	-	-	-	-	-	-
100	22.3	20.3	17.0	13.5	11.0	6.2	4.2	-	-	-	-	-
110	26.3	24.2	21.4	18.6	17.5	13.8	11.6	6.6	-	-	-	-
120	29.7	27.5	25.6	24.0	21.8	19.0	17.9	14.6	12.1	-	-	-
130	33.4	31.2	30.0	28.5	26.9	25.3	23.4	21.8	18.1	14.6	11.3	-
140	37.3	36.0	35.0	32.1	30.4	29.0	27.4	25.9	21.6	17.8	14.5	9.4
143	38.2	37.5	36.1	33.9	32.1	30.7	28.8	27.2	23.0	20.1	16.8	12.5
150	41.0	40.7	38.5	38.0	36.0	34.5	32.1	30.1	26.3	22.4	18.2	15.8
160	-	-	-	-	38.2	36.1	35.0	34.6	31.1	26.8	23.3	19.3

ARNU18GBRA4, ARNU24GBRA4, ARNU28GBRA4

(Unit: CMM)

Setting Value	Static Pressure(mmAq(Pa))										
	5(49)	6(59)	8(78)	10(98)	12(118)	14(137)	15(147)	16(157)	17(168)	18(176)	20(196)
70	18.8	19.1	5.8	-	-	-	-	-	-	-	-
75	24.5	24.2	12.5	3.5	-	-	-	-	-	-	-
80	31.2	29.7	19.2	7.1	3.8	-	-	-	-	-	-
85	36.5	35.8	26.9	15.9	7.0	-	-	-	-	-	-
91	46.5	43.7	38.2	31.3	23.2	14.0	9.0	3.7	-	-	-
96	49.9	461.0	43.0	33.5	31.1	18.4	13.7	9.0	2.6	-	-
101	52.1	50.2	47.9	39.5	37.4	27.3	25.2	17.8	8.9	6.1	-
106	51.4	51.2	50.4	44.4	43.1	33.3	32.1	28.9	21.0	17.9	8.3
111	53.6	53.7	52.9	49.9	48.3	40.6	40.2	32.8	31.5	27.2	17.5
116	-	-	-	55.7	50.8	44.8	42.6	40.1	37.6	32.5	27.6
121	-	-	-	-	52.2	51.0	50.3	45.7	44.6	38.8	32.2
126	-	-	-	-	-	-	54.4	51.2	50.4	46.0	43.5

Note: 1. The above table shows the correlation between the air rates and E.S.P.
2. The above table shows the available E.S.P. range.
3. If the E.S.P. of the installed indoor is less than the lowest value(as mention in the table), indoor components can be failed.

7. External Static Pressure (E.S.P) & Air Flow

ARNU36GB8A4, ARNU42GB8A4, ARNU48GB8A4

(Unit: CMM)

Setting Value	Static Pressure(mmAq(Pa))											
	3(29)	4(39)	5(49)	6(59)	9(88)	12(118)	15(147)	18(177)	20(196)	22(216)	23(226)	25(245)
50	40.3	36.2	-	-	-	-	-	-	-	-	-	-
55	48.8	44.2	36.4	-	-	-	-	-	-	-	-	-
60	54.9	50.2	49.7	45.0	-	-	-	-	-	-	-	-
65	62.6	60.4	55.1	52.9	-	-	-	-	-	-	-	-
70	67.9	64.5	62.1	60.7	47.1	-	-	-	-	-	-	-
75	75.5	72.2	69.0	68.5	56.9	44.7	-	-	-	-	-	-
80	82.6	80.9	76.6	75.4	69.7	55.2	-	-	-	-	-	-
85	88.8	85.9	82.0	81.6	78.6	67.4	55.9	-	-	-	-	-
91	94.7	93.0	90.4	90.2	87.1	78.9	67.6	54.2	-	-	-	-
95	-	-	-	-	-	86.1	77.0	66.4	50.6	30.0	-	-
100	-	-	-	-	-	88.3	84.9	75.9	69.5	60.8	43.1	-
105	-	-	-	-	-	88.3	84.9	81.1	77.4	72.0	67.9	51.3

Note: 1. The above table shows the correlation between the air rates and E.S.P.
2. The above table shows the available E.S.P. range.
3. If the E.S.P. of the installed indoor is less than the lowest value(as mention in the table), indoor components can be failed.

7. External Static Pressure (E.S.P) & Air Flow

ARNU07GBGA4, ARNU09GBGA4, ARNU12GBGA4, ARNU15GBGA4

Capacity	Mode		Set value	Standard ESP(mmAq(Pa))	CMM	Lower Limit of External Static Pressure(mmAq(Pa))	Upper Limit of External Static Pressure(mmAq(Pa))
7k	High (factory set)	HI	98	6(59)	12.5(441)	6(59)	12(118)
		Mid	95		11.5(406)		
		Low	92		9.4(332)		
	Standard	HI	92	4(39)	14.6(516)	4(39)	8(78)
		Mid	89		13.7(484)		
		Low	86		12.3(434)		
9k	High (factory set)	HI	99	6(59)	12.8(452)	6(59)	12(118)
		Mid	95		11.5(406)		
		Low	92		9.4(332)		
	Standard	HI	93	4(39)	15.1(533)	4(39)	8(78)
		Mid	89		13.7(484)		
		Low	86		12.3(434)		
12k	High (factory set)	HI	100	6(59)	13.5(477)	6(59)	12(118)
		Mid	96		12.1(427)		
		Low	93		9.4(332)		
	Standard	HI	95	4(39)	16.6(586)	4(39)	8(78)
		Mid	92		15.1(533)		
		Low	89		13.7(483)		
15k	High (factory set)	HI	128	8(78)	13.8(487)	8(78)	18(177)
		Mid	106		11.8(417)		
		Low	103		8.3(293)		
	Standard	HI	100	6(59)	13.5(477)	6(59)	10(98)
		Mid	94		12.1(427)		
		Low	89		9.0(318)		

Note:

1.The above table shows the available E.S.P. range.

2. The air flow of above model is increased by 20% depending on the Mode setting.

3. Above models are developed for high efficiency and high sensible heat.
   If you want to use Zone control, you have to set ESP Value.

7. External Static Pressure (E.S.P) & Air Flow

ARNU18GBRA4, ARNU24GBRA4, ARNU28GBRA4

Capacity	Mode		Set value	Standard ESP(mmAq(Pa))	CMM	Lower Limit of External Static Pressure(mmAq(Pa))	Upper Limit of External Static Pressure(mmAq(Pa))
18k	High (factory set)	HI	88	8(78)	29.1(1,027)	8(78)	18(177)
		Mid	84		24.0(847)		
		Low	80		19.2(678)		
	Standard	HI	82	6(59)	31.7(1,119)	6(59)	10(98)
		Mid	78		27.4(969)		
		Low	74		23.2(819)		
24k	High (factory set)	HI	92	8(78)	34.2(1,208)	8(78)	18(177)
		Mid	88		29.1(1,027)		
		Low	84		24.0(847)		
	Standard	HI	86	6(59)	35.9(1,269)	6(59)	10(98)
		Mid	82		31.7(1,119)		
		Low	78		27.4(969)		
28k	High (factory set)	HI	108	14(137)	36.2(1,278)	10(98)	20(196)
		Mid	105		32.1(1,134)		
		Low	102		28.5(1,007)		
	Standard	HI	94	10(98)	32.6(1,151)	7(67)	14(137)
		Mid	91		31.3(1,105)		
		Low	89		30.4(1,074)		

ARNU36GB8A4, ARNU42GB8A4, ARNU48GB8A4

Capacity	Mode		Set value	Standard ESP(mmAq(Pa))	CMM	Lower Limit of External Static Pressure(mmAq(Pa))	Upper Limit of External Static Pressure(mmAq(Pa))
36k	High (factory set)	HI	90	18(176)	49.0(1730)	9(88)	25(245)
		Mid	87		37.3(1317)		
		Low	84		30.2(1066)		
	Standard	HI	72	9(88)	53.7(1896)	9(88)	25(245)
		Mid	69		49.5(1748)		
		Low	66		43.9(1550)		
42k	High (factory set)	HI	91	18(176)	54.2(1914)	9(88)	25(245)
		Mid	88		41.3(1458)		
		Low	85		31.8(1123)		
	Standard	HI	73	9(88)	55.6(1963)	9(88)	25(245)
		Mid	70		50.6(1786)		
		Low	67		45.0(1589)		
48k	High (factory set)	HI	92	18(176)	57.2(2019)	9(88)	25(245)
		Mid	89		43.0(1518)		
		Low	86		34.0(1200)		
	Standard	HI	74	9(88)	58.0(2048)	9(88)	25(245)
		Mid	71		52.3(1846)		
		Low	68		47.3(1670)		

Note:

1.The above table shows the available E.S.P. range.

2. The air flow of above model is increased by 20% depending on the Mode setting.

3. Above models are developed for high efficiency and high sensible heat.
   If you want to use Zone control, you have to set ESP Value.

8. Electric Characteristics

Unit					Power Supply		IFM		Input(W)	
Model	Type	Hz	Volts	Voltage Range	MCA	MFA	kW	FLA	cooling	Heating
ARNU07GBGA4	BG	50	220-240	Max:264 Min:198	3.31	15	0.35	2.65	450	450
ARNU09GBGA4	BG				3.31	15	0.35	2.65	450	450
ARNU12GBGA4	BG				3.31	15	0.35	2.65	450	450
ARNU15GBGA4	BG				3.31	15	0.35	2.65	450	450
ARNU18GBRA4	BR				4.40	15	0.37	3.50	450	450
ARNU24GBRA4	BR				4.40	15	0.37	3.50	450	450
ARNU28GBRA4	BR				4.40	15	0.37	3.50	450	450
ARNU36GB8A4	B8				6.50	15	0.75	5.20	800	800
ARNU42GB8A4	B8				6.50	15	0.75	5.20	800	800
ARNU48GB8A4	B8				6.50	15	0.75	5.20	800	800
ARNU07GBGA4	BG	60	220	Max:242 Min:198	3.31	15	0.35	2.65	450	450
ARNU09GBGA4	BG				3.31	15	0.35	2.65	450	450
ARNU12GBGA4	BG				3.31	15	0.35	2.65	450	450
ARNU15GBGA4	BG				3.31	15	0.35	2.65	450	450
ARNU18GBRA4	BR				4.40	15	0.37	3.50	450	450
ARNU24GBRA4	BR				4.40	15	0.37	3.50	450	450
ARNU28GBRA4	BR				4.40	15	0.37	3.50	450	450
ARNU36GB8A4	B8				6.50	15	0.75	5.20	800	800
ARNU42GB8A4	B8				6.50	15	0.75	5.20	800	800
ARNU48GB8A4	B8				6.50	15	0.75	5.20	800	800

Symbols:

MCA : Min, Circuit Amps(A)
MFA : Max. Fuse Amps(see note 5)
kW : Fan Motor Rated Output(kW)
FLA : Full Load Amps(A)
IFM : Indoor Fan Motor

Note :

1. Voltage range
   Units are suitable for use on electrical systems where voltage supplied to unit terminals is not below or above the listed range limits,
2. Maximum allowable voltage unbalance between phases is 2%
3. MCA/MFA
   MCA=1.25 x FLA
   MFA≤ 4 x FLA
   (Next lower standard fuse rating. Min. 15A)
4. Select wire size based on the MCA
5. Instead of fuse, use Circuit Breaker.

9. Sound Levels

Overall

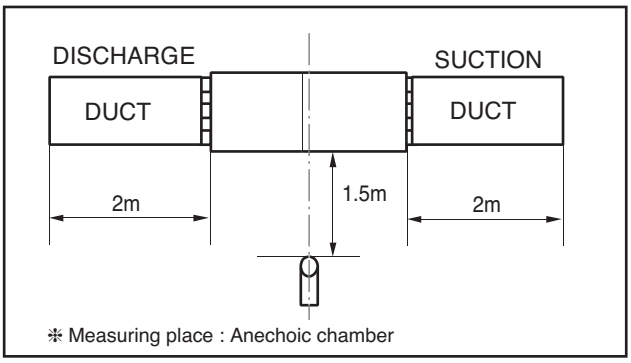

Notes:

1. Sound measured at 1.5m away from the center of the unit
2. Operating condition
   - Power source : 220-240V 50Hz / 220V 60Hz
   - Cooling : Indoor temperature (27°C DB, 19°C WB), Outdoor temperature (35°C DB, 24°C WB)
   - Heating : Indoor temperature (20°C DB, 15°C WB), Outdoor temperature (7°C DB, 6°C WB)
   - External static pressure is according to “Standard mode” value. Refer the specifications.
3. Reference accoustic pressure 0dB = 20μPa
4. Sound level will vary depending on a range of factors such as the construction(acoustic absorption coefficient) of particular room in which the equipment in installed.

Model	Sound Level dB(A)		
	H	M	L
ARNU07GBGA4	31	30	29
ARNU09GBGA4	32	31	29
ARNU12GBGA4	32	31	30
ARNU15GBGA4	33	32	31
ARNU18GBRA4	43	42	41

Model	Sound Level dB(A)		
	H	M	L
ARNU24GBRA4	44	43	42
ARNU28GBRA4	41	40	39
ARNU36GB8A4	46	45	42
ARNU42GB8A4	47	46	43
ARNU48GB8A4	47	46	44

Sound Pressure Level

ARNU07GBGA4

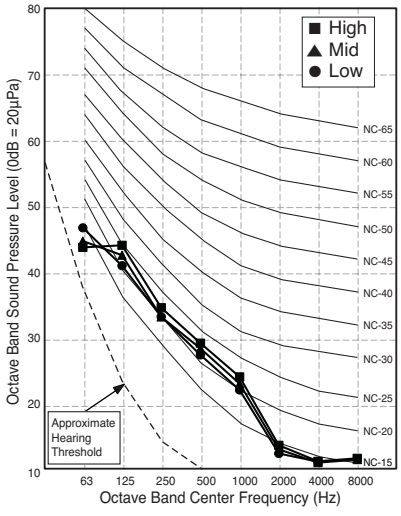

ARNU09GBGA4

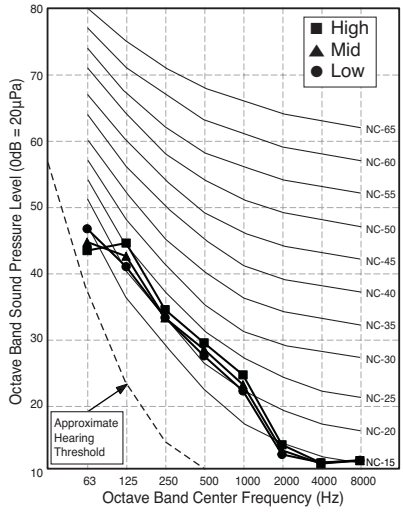

ARNU12GBGA4

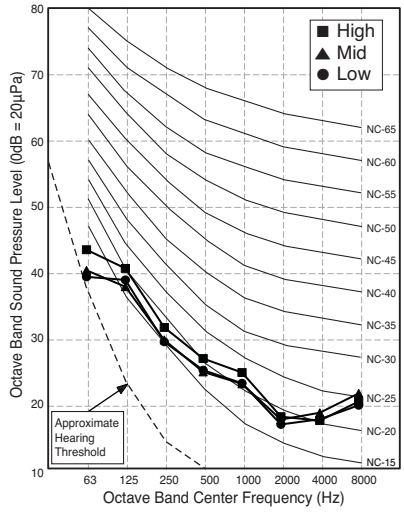

9. Sound Levels

ARNU15GBGA4

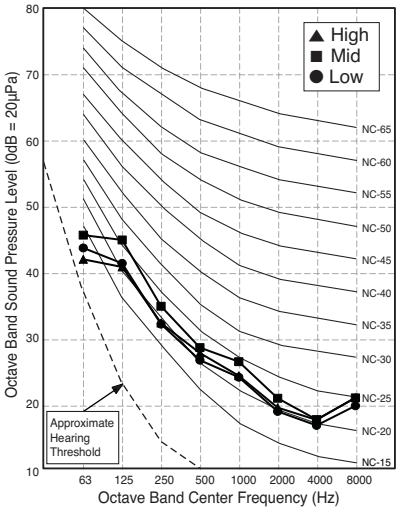

ARNU18GBRA4

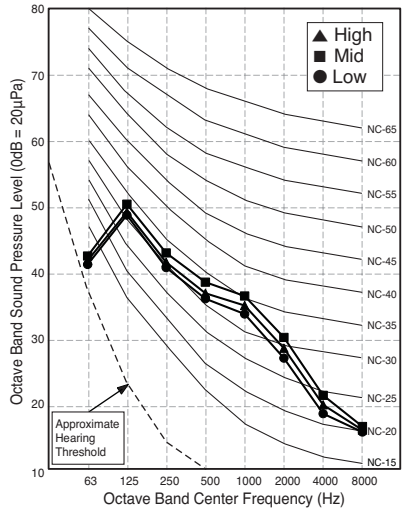

ARNU24GBRA4

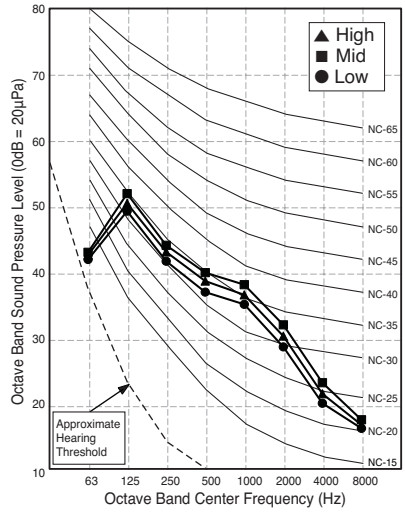

ARNU28GBRA4

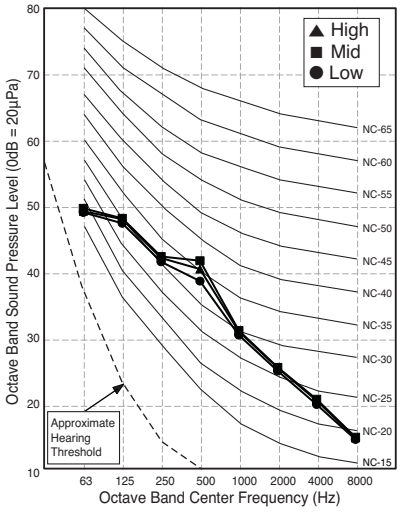

ARNU36GB8A4

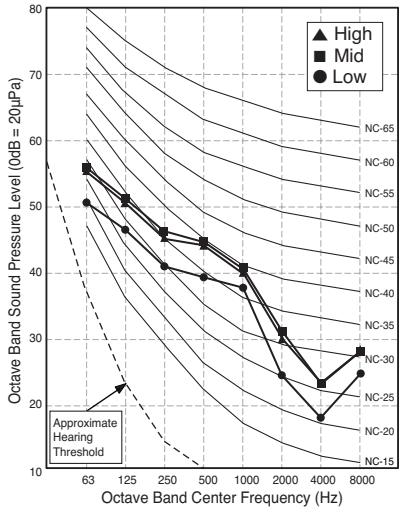

ARNU42GB8A4

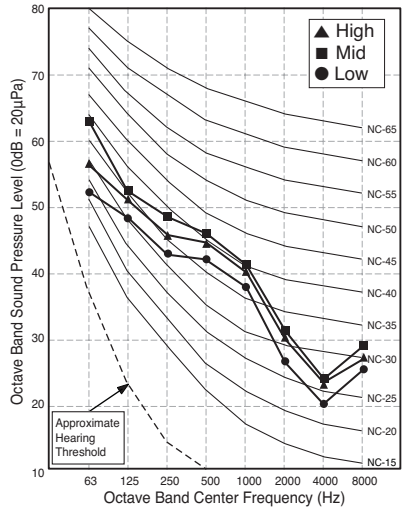

ARNU48GB8A4

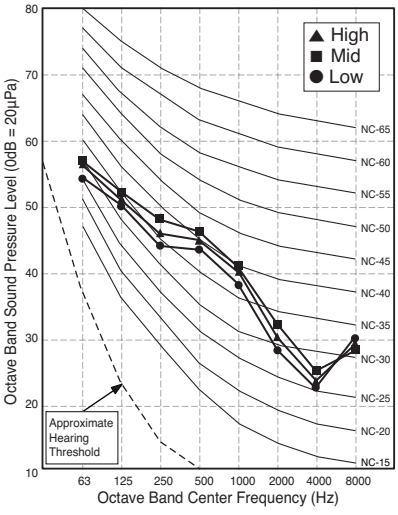

10. Installation

- Please read this instruction sheet completely before installing the product.
- When the power cord is damaged, replacement work shall be performed by authorized personnel only.
- Installation work must be performed in accordance with the national wiring standards by authorized personnel only.

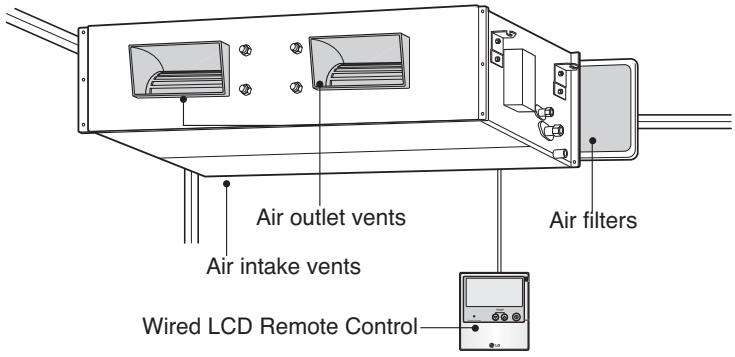

Required Parts

- Connecting cable
- Pipes: Gas side
  Liquid side
- Hanging Bolt
  (W 3/8 or M10 length 650mm)
- Insulated drain hose
- Additional Drain hose

Required Tools

- Level
- Screw driver
- Electric drill
- Hole core drill
- Flaring Tool set
- Torque Wrenches
- Hexagonal Wrench
- Gas-leak detector
- Thermometer

10.1 Selection of the best location

Install the air conditioner in the location that satisfies the following conditions.

- The place shall easily bear a load exceeding four times the indoor unit's weight.
- The place shall be able to inspect the unit as the figure.
- The place where the unit shall be leveled.
- The place shall allow easy water drainage.
  (Suitable dimension "H" is necessary to get a slope to drain as figure.)
- The place shall easily connect with the outdoor unit.
- The place where the unit is not affected by an electrical noise.
- The place where air circulation in the room will be good .
- There should not be any heat source or steam near the unit.
- The servicing inspection hole in the ceiling should be as large as the product
- The selection of the servicing hole should be approved by the customer

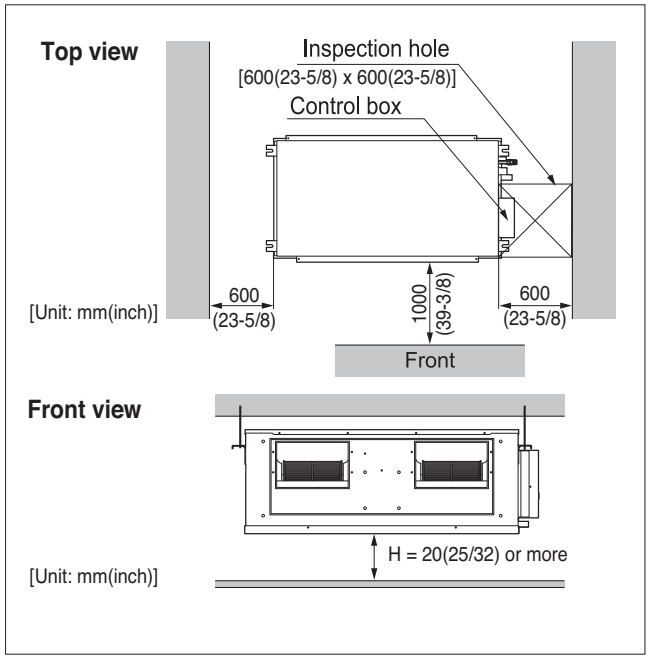

10.2 Ceiling dimension and hanging bolt location

■ **Installation of Unit**
Install the unit above the ceiling correctly.

CASE 1

POSITION OF SUSPENSION BOLT

- Apply a joint-canvas between the unit and duct to absorb unnecessary vibration.
- Apply a filter Accessory at air return hole.
- Refer to the Dimensions.

(Unit:mm)

Dimension / Chassis	A	B	C	D	E	F	(G)	H	I
BG	1232	1182	355	47	450	30	87	830	186
BR	1282	1230	477	56	590	30	120	1006	294

Dimension / Chassis	A	B	C	D	E	F	G	H	I	J	K	L
B8	1622	1565	580	292	695	1400	460	1122	1680	390	445	15

- Install the unit leaning to a drainage hole side as a figure for easy water drainage.

CASE 2

POSITION OF CONSOLE BOLT

- A place where the unit will be leveled and that can support the weight of the unit.
- A place where the unit can withstand its vibration.
- A place where service can be easily performed.

NOTE:

- Throughly study the following installation locations:

1. In such places as restaurants and kitchens, considerable amount of oil steam and flour adhere to the fan, the fin of the heat exchanger, resulting in heat exchange reduction, spraying, dispersing of water drops, etc.
   In these cases, take the following actions:
   - Make sure that the ventilation fan for smoke-collecting hood on a cooking table has sufficient capacity so that it draws oily steam which should not flow into the suction of the air conditioner.
   - Make enough distance from a cooking room to install the air conditioner in such a place where it may not suck in oil steam.
2. Avoid installing air conditioner in such circumstances where cutting oil mist or iron powder is in suspension in factories, etc.
3. Avoid places where inflammable gas is generated, flows in, is stored or vented.
4. Avoid places where sulfurous acid gas or corrosive gas is generated.
5. Avoid places near high frequency generators.

BG/BR Chassis

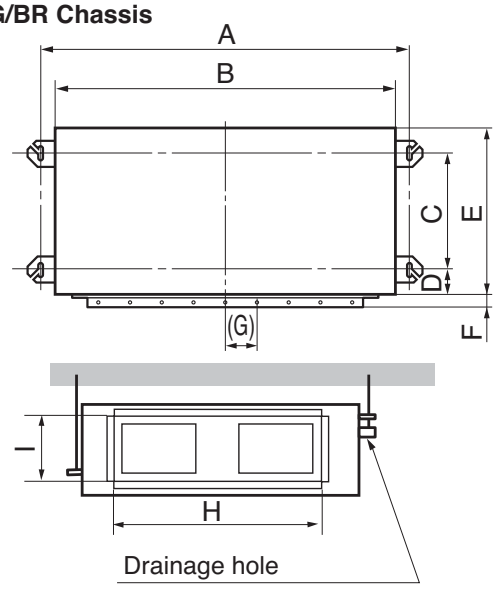

B8 Chassis

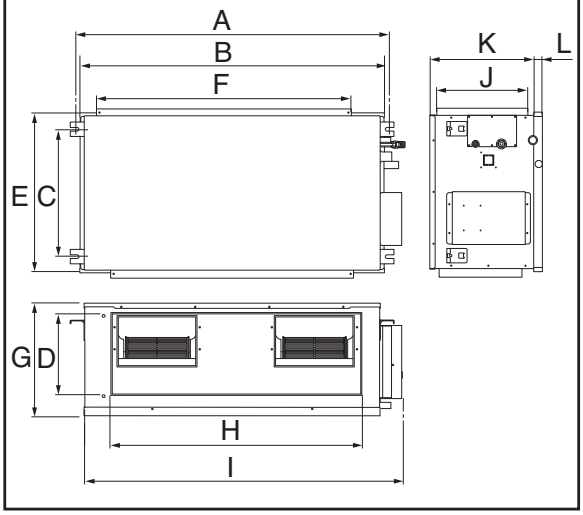

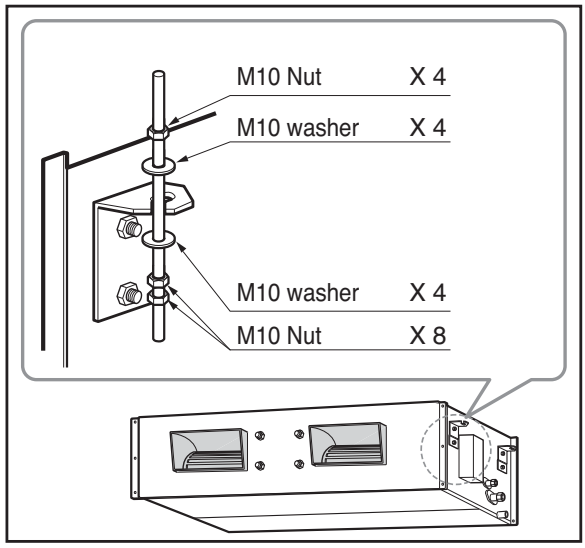

10. Installation

- Select and mark the position for fixing bolts.
- Drill the hole for set anchor on the face of ceiling.

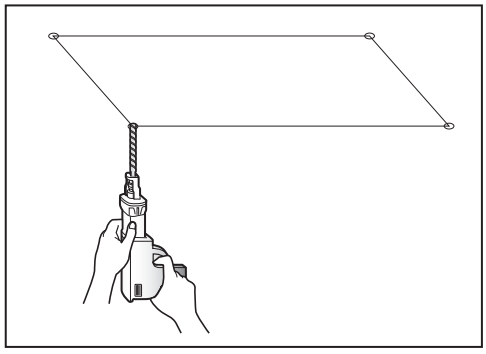

- Insert the set anchor and washer onto the suspension bolts for locking the suspension bolts on the ceiling.
- Mount the suspension bolts to the set anchor firmly.
- Secure the installation plates onto the suspension bolts (adjust level roughly) using nuts, washers and spring washers.

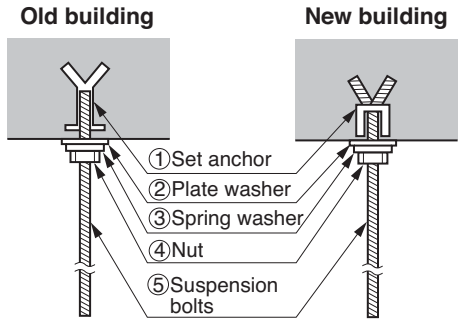

⚠ CAUTION

Tighten the nut and bolt to prevent unit falling.

10.3 Connecting Cables between Indoor Unit and Outdoor Unit

Connect the wires to the terminals on the control board individually according to the outdoor unit connection.

- Ensure that the color of the wires of outdoor unit and the terminal No. are the same as those of indoor unit respectively

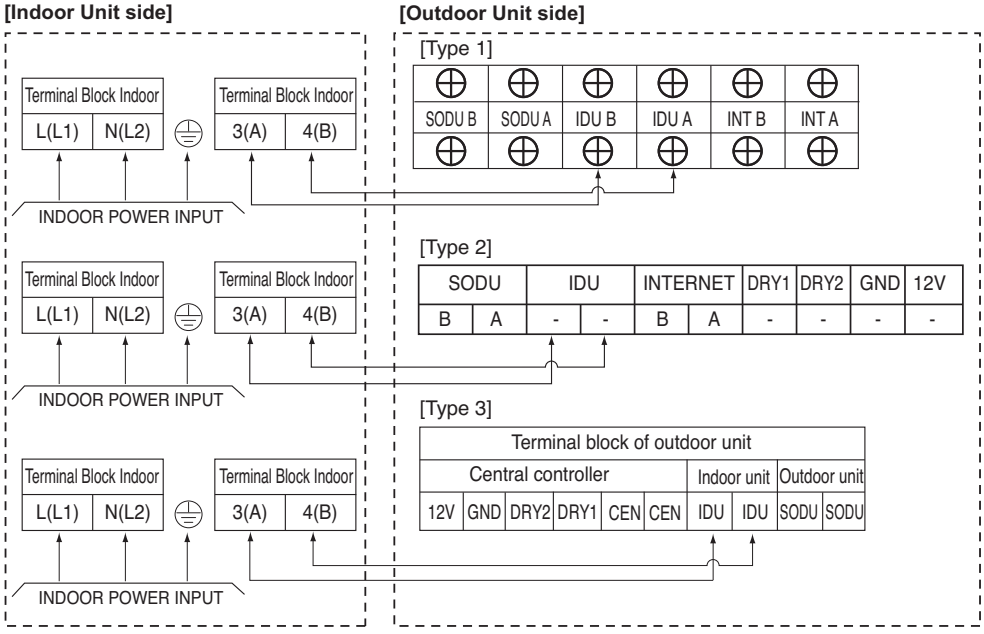

⚠ WARNING

Make sure that the screws of the terminal are not loose.

Clamping of cables

1) Arrange 2 power cables on the control panel.
2) First, fasten the steel clamp with a screw to the inner boss of control panel.
3) For the cooling model, fix the other side of the clamp with a screw strongly. For the heat pump model, put the 0.75mm² cable(thinner cable) on the clamp and tighten it with a plastic clamp to the other boss of the control panel.

10. Installation

THERMAL INSULATION All thermal insulation must comply with local requirement.

INDOOR UNIT

BG/BR Chassis

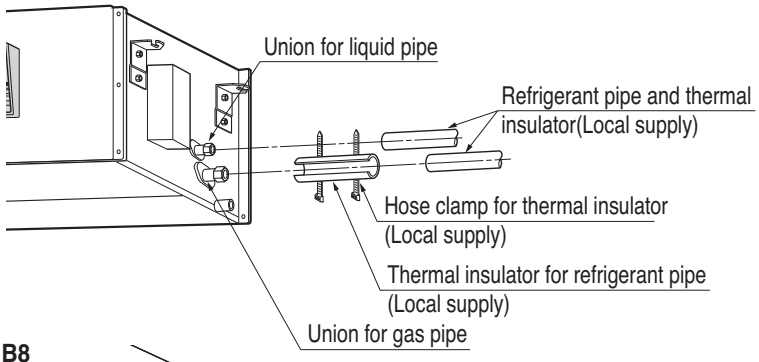

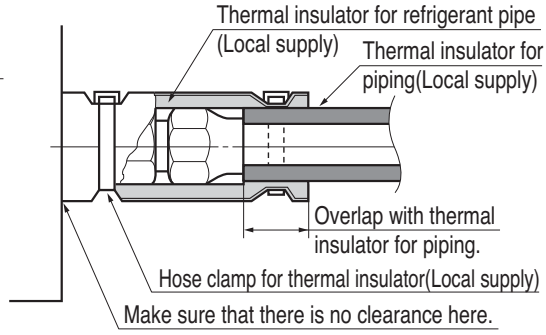

B8

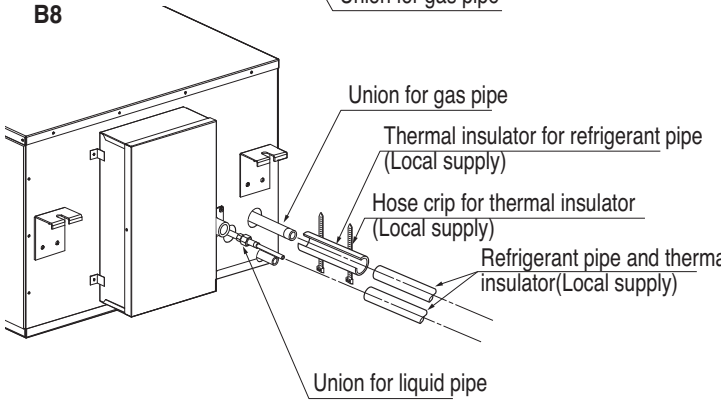

10.4 Checking the Drainage

1) Checking the Drainage

1. Remove the Air Filter.

2. Check the drainage.

- Spray one or two glasses of water on the evaporator.
- Ensure that water flows through drain hose of indoor unit without any leakage.

BG/BR Chassis

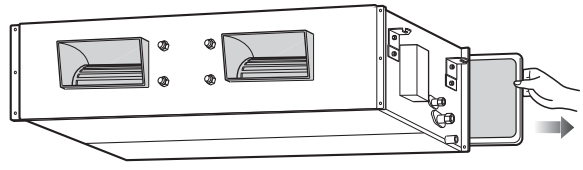

B8

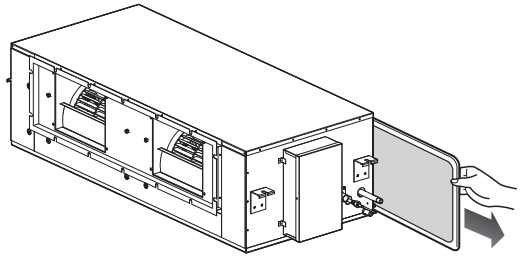

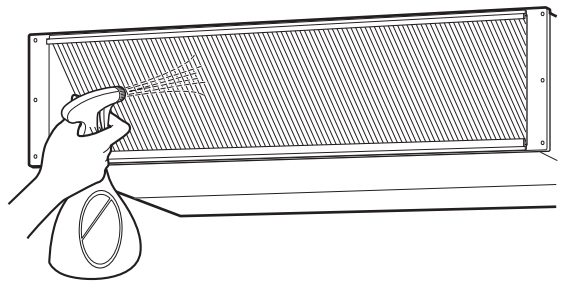

10.5 Indoor Unit Drain Piping

- Drain piping must have down-slope (1/50 to 1/100): be sure not to provide up-and-down slope to prevent reversal flow.
- During drain piping connection, be careful not to exert extra force on the drain port on the indoor unit.
- The outside diameter of the drain connection on the indoor unit is 32mm.

Piping material: Polyvinyl chloride pipe inner diometes Ø 25mm and pipe fittings

- Be sure to install heat insulation on the drain piping.

Heat insulation material: Polyethylene foam with thickness more than 8 mm.

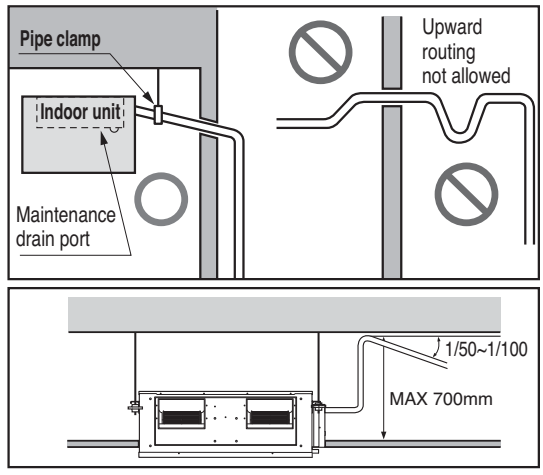

Drain test

The air conditioner uses a drain pump to drain water.
Use the following procedure to test the drain pump operation:

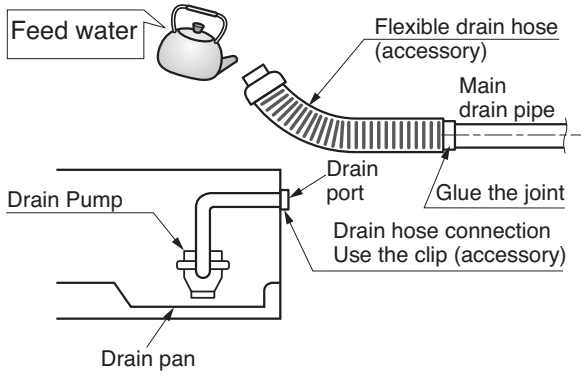

- Connect the main drain pipe to the exterior and leave it provisionally until the test comes to an end.
- Feed water to the flexible drain hose and check the piping for leakage.
- Be sure to check the drain pump for normal operation and noise when electrical wiring is complete.
- When the test is complete, connect the flexible drain hose to the drain port on the indoor unit.

⚠ CAUTION

The supplied flexible drain hose should not be strained.
A strained hose may cause leakage of water.

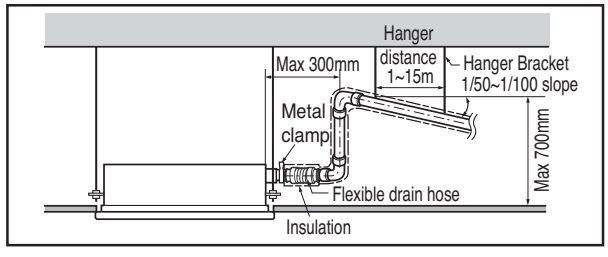

10.6 Ground drain piping

a) It is standard work practice to make connections to the main pipe from above. The pipe down from the combination should be as large as possible.

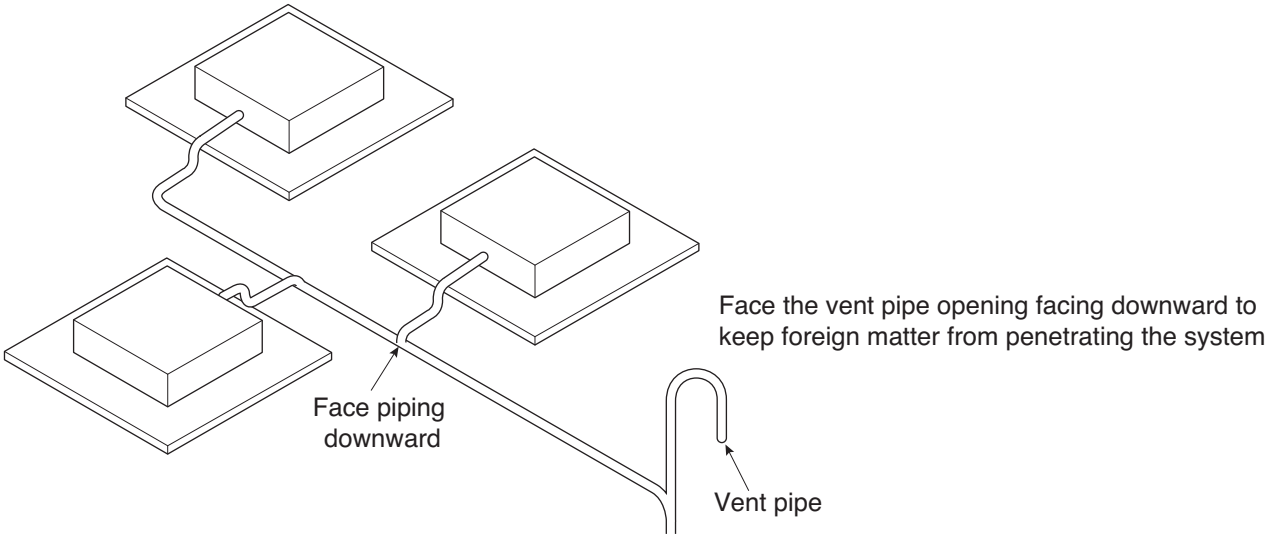

b) The pipe work should be kept as short as possible and the number of indoor units per group kept to a minimum.

10.7 Use of an auxiliary drain hose(flexible)

a) To connect drain pipe to the drain socket on the indoor unit, an auxiliary flexible drain hose should be used. auxiliary flexible drain hose allows that the drain pipe can be connected to the socket without breaking by excessive strain.

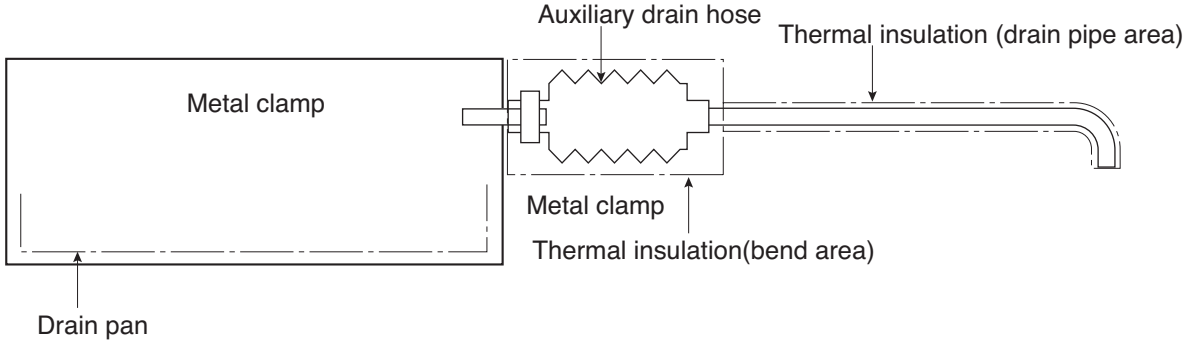

❊ Important points

- The drain pipe should be at least equal in size to that of the indoor unit.
- The drain pipe is thermally insulated to prevent the formation of condensation inside the pipe.
- The drain up mechanism should be fitted before the indoor unit is installed and when the electricity has been connected some water should be added to the drain pan and the drain pump to check and see if it is functioning correctly.
- All connections should be secure. (Special care is needed with PVC pipe)
- Insulate auxiliary drain hose with thermal insulation band.

WIRED REMOTE CONTROLLER INSTALLATION

• Since the room temperature sensor is in the remote controller, the remote controller box should be installed in a place away from direct sunlight, high humidity and direct supply of cold air to maintain proper space temperature.
Install the remote controller about 5ft(1.5m) above the floor in an area with good air circulation at an average temperature.

Do not install the remote controller where it can be affected by:

- Drafts, or dead spots behind doors and in corners.
- Hot or cold air from ducts.
- Radiant heat from sun or appliances.
- Concealed pipes and chimneys.
- Uncontrolled areas such as an outside wall behind the remote controller.
- This remote controller is equipped with a seven segment LED. display. For proper display of the remote controller LED's, the remote controller should be installed properly as shown in Fig.1.
(The standard height is 1.2~1.5 m from floor level.)

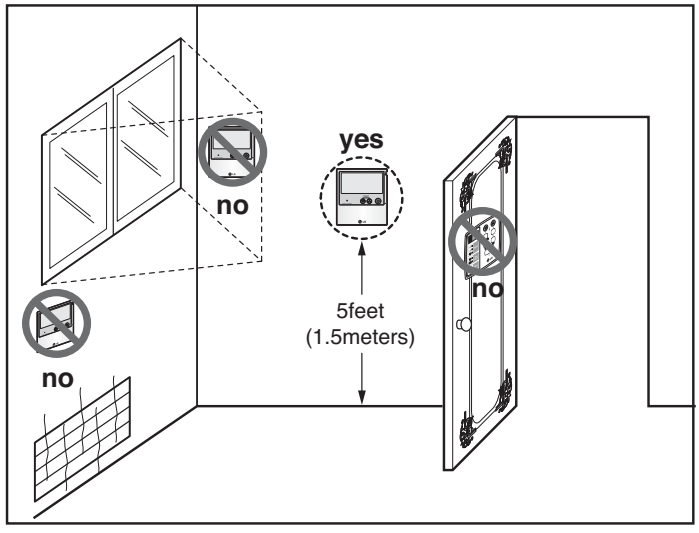

Fig.1 Typical locations for remote controller

11. Accessories

Standard Accessories

Name	Drain hose	Clamp metal	Washer for hanging backet	Clamp (Tie Wrap)	Insulation for fitting	(Other)
Quantity	1 EA	2 EA	8 EA	4 EA	1 SET	
Shape				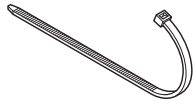	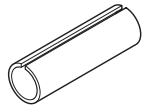 for gas pipe 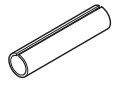 for liquid pipe	• Owner's manual • Installation manual

⚠ CAUTION

• Use only those accessories (Standard or optional) which have designated specifications.

MULTI V™ Indoor unit

Ceiling Concealed Duct (Middle Static)

1. List of functions
2. Specifications
3. Dimensions & Gravity point
4. Piping Diagrams
5. Wiring Diagrams
6. Capacity Tables
7. External Static Pressure(E.S.P) & Air Flow
8. Electric Characteristics
9. Sound Levels
10. Installation
11. Accessories

1. List of functions

Category	Function	ARNU07GM1A4, ARNU09GM1A4, ARNU12GM1A4, ARNU15GM1A4, ARNU18GM1A4, ARNU24GM1A4, ARNU28GM2A4, ARNU36GM2A4, ARNU42GM2A4, ARNU48GM3A4, ARNU54GM3A4
Air flow	Air supply outlet	1
	Airflow direction control(left & right)	-
	Airflow direction control(up & down)	-
	Auto swing(left & right)	-
	Auto swing(up & down)	-
	Airflow steps(fan/cool/heat)	3 / 3 / 3
	Chaos swing	-
	Chaos wind(auto wind)	-
	Jet cool(Power wind)	-
	Swirl wind	-
Air purifying	Deodorizing filter	X
	Plasma air purifier	X
	Prefilter(washable / anti-fungus)	O
Installation	Drain pump	O
	E.S.P. control	O
	Electric heater(operation)	X
	High ceiling operation	-
Reliability	Hot start	O
	Self diagnosis	O
	Soft dry operation	O
Convenience	Auto changeover	O(Heat recovery)
	Auto cleaning	X
	Auto operation(artificial intelligence)	O(Heat pump or Cooling only)
	Auto restart operation	O
	Child lock	O
	Forced operation	-
	Group control	O
	Sleep mode	X
	Timer(on/off)	O
	Timer(weekly)	O
	Two thermistor control	O
	External On/Off	O
Individual control	Wide wired remote controller (RS2)	PQRCVSL0/PQRCVSL0QW
	Wide wired remote controller (RS2 Plus)	PREMTB001/PREMTBB01
	Premium wired remote controller	PREMTA000/PREMTA000A/PREMTA000B
	Simple wired remote controller	PQRCVCL0Q(W)
	Wired remote controller(for hotel use)	PQRCHCA0Q(W)
	Wireless LCD remote control	PQWRH(C)Q0FDB
Special function kit	Zone control	ABZCA
	CTIE	-
	Electro thermostat	-
	Remote temperature sensor	PQRSTA0
	Group control wire	PZCWRCG3
	Dry contact	PDRYCB000/PDRYCB100/PDRYCB300/PDRYCB400/PDRYCB500

O : Applied X : Not applied – : No relation

Option : Model name & price are different according to options, and assembled in factory with main unit.

Accessory : Installed at field, ordered and purchased separately by the corresponding model name, supplied with separate package.

2. Specifications

Type			Ceiling Concealed Duct - Middle Static		
Model		Unit	ARNU07GM1A4	ARNU09GM1A4	ARNU12GM1A4
Cooling Capacity		kW	2.2	2.8	3.6
		kcal/h	1,900	2,400	3,100
		Btu/h	7,500	9,600	12,300
Heating Capacity		kW	2.5	3.2	4.0
		kcal/h	2,200	2,800	3,400
		Btu/h	8,500	10,900	13,600
Casing			Galvanized Steel Plate	Galvanized Steel Plate	Galvanized Steel Plate
Dimensions(WxHxD)	Body	mm	900 x 270 x 700	900 x 270 x 700	900 x 270 x 700
		inch	35-7/16 x 10-5/8 x 27-9/16	35-7/16 x 10-5/8 x 27-9/16	35-7/16 x 10-5/8 x 27-9/16
Coil	Rows x Columns x FPI		2 x 13 x 18	2 x 13 x 18	2 x 13 x 18
	Face Area	m^2	0.21	0.21	0.21
Fan	Type		Sirocco Fan	Sirocco Fan	Sirocco Fan
	Motor Output x Number	W	136 x 1	136 x 1	136 x 1
	Running Current	A	1.6	1.6	1.6
	Air Flow Rate(H / M / L)	CMM	9.0 / 7.5 / 6.0	9.5 / 7.5 / 6.0	11.0 / 9.0 / 7.0
	(High Mode-factory set)	cfm	318 / 265 / 212	336 / 265 / 212	388 / 318 / 247
	External Static Pressure	mmAq(Pa)	6(59)	6(59)	6(59)
	Air Flow Rate(H / M / L)	CMM	9.0 / 7.5 / 6.0	9.5 / 7.5 / 6.0	11.0 / 9.0 / 7.0
	(Standard Mode)	cfm	318 / 265 / 212	336 / 265 / 212	388 / 318 / 247
	External Static Pressure	mmAq(Pa)	2.5(25)	2.5(25)	2.5(25)
	Drive		Direct	Direct	Direct
	Motor type		BLDC	BLDC	BLDC
Temperature Control			Microprocessor, Thermostat for cooling and heating		
Sound Absorbing Thermal Insulation Material			Foamed polystrene	Foamed polystrene	Foamed polystrene
Air Filter			-	-	-
Safety Device			Fuse	Fuse	Fuse
Pipe Connections	Liquid Side	mm(inch)	Ø6.35(1/4)	Ø6.35(1/4)	Ø6.35(1/4)
	Gas Side	mm(inch)	Ø12.7(1/2)	Ø12.7(1/2)	Ø12.7(1/2)
	Drain Pipe(Internal Dia.)	mm(inch)	25(1)	25(1)	25(1)
Net Weight	Body	kg(lbs)	25.5(56)	25.5(56)	25.5(56)
Noise Level(Sound Pressure, 1.5m, H / M / L)		dB(A)	26 / 24 / 23	27 / 25 / 23	27 / 25 / 23
Power Supply		Ø, V, Hz	1, 220-240, 50	1, 220-240, 50	1, 220-240, 50
			1, 220, 60	1, 220, 60	1, 220, 60
Refrigerant Control			EEV	EEV	EEV
Transmission Cable		mm^2	CVV-SB 1.0~1.5 x 2C	CVV-SB 1.0~1.5 x 2C	CVV-SB 1.0~1.5 x 2C

Notes:

1. Capacities are based on the following conditions:
   - Cooling
     - Indoor temp. 27°C[80.6°F]DB/ 19°C[66.2°F]WB
     - Outdoor temp. 35°C[95°F]DB/ 24°C[75.2°F]WB
     - Interconnecting Piping Length 7.5m
     - Level Difference of Zero
   - Heating
     - Indoor temp. 20°C[68°F]DB/ 15°C[59°F]WB
     - Outdoor temp. 7°C[44.6°F]DB/ 6°C[42.8°F]WB
     - Interconnecting Piping Length 7.5m
     - Level Difference of Zero
2. Capacities are net capacities
3. Due to our policy of innovation some specifications may be changed without prior notification
4. Wiring cable size must comply with the applicable local and national codes. And “Electric characteristics” chapter should be considered for electrical work and design. Especially the power cable and circuit breaker should be selected in accordance with that.
4. EEV : Electronic Expansion Valve
5. Sound pressure levels are measured at 50Pa External Static Pressure condition.
6. Anechoic chamber conversion value is measured at 1.5 m downward from unit centre.
   The values depends on the ambient conditions and values are normally higher in actual operation.

Conversion Formula
kcal/h= kW x 860
Btu/h = kW x 3412
cfm = m^3/min x 35.3
l/s = CMM x 1000/60

2. Specifications

Type			Ceiling Concealed Duct - Middle Static		
Model		Unit	ARNU15GM1A4	ARNU18GM1A4	ARNU24GM1A4
Cooling Capacity		kW	4.5	5.6	7.1
		kcal/h	3,900	4,800	6,100
		Btu/h	15,400	19,100	24,200
Heating Capacity		kW	5.0	6.3	8.0
		kcal/h	4,300	5,400	6,900
		Btu/h	17,100	21,500	27,300
Casing			Galvanized Steel Plate	Galvanized Steel Plate	Galvanized Steel Plate
Dimensions(WxHxD)	Body	mm	900 x 270 x 700	900 x 270 x 700	900 x 270 x 700
		inch	35-7/16 x 10-5/8 x 27-9/16	35-7/16 x 10-5/8 x 27-9/16	35-7/16 x 10-5/8 x 27-9/16
Coil	Rows x Columns x FPI		2 x 13 x 18	2 x 13 x 18	3 x 13 x 18
	Face Area	m^2	0.21	0.21	0.21
Fan	Type		Sirocco Fan	Sirocco Fan	Sirocco Fan
	Motor Output x Number	W	136 x 1	136 x 1	136 x 1
	Running Current	A	1.6	1.6	1.6
	Air Flow Rate(H / M / L)	CMM	16.0 / 12.0 / 9.0	17.0 / 14.5 / 12.0	19.0 / 16.0 / 14.0
	(High Mode-factory set)	cfm	565 / 424 / 318	600 / 512 / 424	671 / 565 / 494
	External Static Pressure	mmAq(Pa)	6(59)	6(59)	6(59)
	Air Flow Rate(H / M / L)	CMM	16.0 / 12.0 / 9.0	17.0 / 14.5 / 12.0	19.0 / 16.0 / 14.0
	(Standard Mode)	cfm	565 / 424 / 318	600 / 512 / 424	671 / 565 / 494
	External Static Pressure	mmAq(Pa)	2.5(25)	2.5(25)	2.5(25)
	Drive		Direct	Direct	Direct
	Motor type		BLDC	BLDC	BLDC
Temperature Control			Microprocessor, Thermostat for cooling and heating		
Sound Absorbing Thermal Insulation Material			Foamed polystrene	Foamed polystrene	Foamed polystrene
Air Filter			-	-	-
Safety Device			Fuse	Fuse	Fuse
Pipe Connections	Liquid Side	mm(inch)	Ø6.35(1/4)	Ø6.35(1/4)	Ø9.52(3/8)
	Gas Side	mm(inch)	Ø12.7(1/2)	Ø12.7(1/2)	Ø15.88(5/8)
	Drain Pipe(Internal Dia.)	mm(inch)	25(1)	25(1)	25(1)
Net Weight	Body	kg(lbs)	25.5(56)	25.5(56)	26.5(58)
Noise Level(Sound Pressure, 1.5m, H / M / L)		dB(A)	30 / 27 / 23	31 / 28 / 25	32 / 29 / 26
Power Supply		Ø, V, Hz	1, 220-240, 50	1, 220-240, 50	1, 220-240, 50
			1, 220, 60	1, 220, 60	1, 220, 60
Refrigerant Control			EEV	EEV	EEV
Transmission Cable		mm^2	CVV-SB 1.0~1.5 x 2C	CVV-SB 1.0~1.5 x 2C	CVV-SB 1.0~1.5 x 2C

Notes:

1. Capacities are based on the following conditions:
   - Cooling
     - Indoor temp. 27°C[80.6°F]DB/ 19°C[66.2°F]WB
     - Outdoor temp. 35°C[95°F]DB/ 24°C[75.2°F]WB
     - Interconnecting Piping Length 7.5m
     - Level Difference of Zero
   - Heating
     - Indoor temp. 20°C[68°F]DB/ 15°C[59°F]WB
     - Outdoor temp. 7°C[44.6°F]DB/ 6°C[42.8°F]WB
     - Interconnecting Piping Length 7.5m
     - Level Difference of Zero
2. Capacities are net capacities
3. Due to our policy of innovation some specifications may be changed without prior notification
4. Wiring cable size must comply with the applicable local and national codes. And “Electric characteristics” chapter should be considered for electrical work and design. Especially the power cable and circuit breaker should be selected in accordance with that.
4. EEV : Electronic Expansion Valve
5. Sound pressure levels are measured at 50Pa External Static Pressure condition.
6. Anechoic chamber conversion value is measured at 1.5 m downward from unit centre.
   The values depends on the ambient conditions and values are normally higher in actual operation.

Conversion Formula
kcal/h= kW x 860
Btu/h = kW x 3412
cfm = m^3/min x 35.3
l/s = CMM x 1000/60

2. Specifications

Type			Ceiling Concealed Duct - Middle Static		
Model		Unit	ARNU28GM2A4	ARNU36GM2A4	ARNU42GM2A4
Cooling Capacity		kW	8.2	10.6	12.3
		kcal/h	7,100	9,100	10,600
		Btu/h	28,000	36,200	42,000
Heating Capacity		kW	9.2	11.9	13.8
		kcal/h	8,000	10,200	11,800
		Btu/h	31,500	40,600	47,000
Casing			Galvanized Steel Plate	Galvanized Steel Plate	Galvanized Steel Plate
Dimensions(WxHxD)	Body	mm	1250 × 270 × 700	1250 × 270 × 700	1250 × 270 × 700
		inch	49-7/32 x 10-5/8 x 27-9/16	49-7/32 x 10-5/8 x 27-9/16	49-7/32 x 10-5/8 x 27-9/16
Coil	Rows x Columns x FPI		2 x 13 x 18	2 x 13 x 18	3 x 13 x 18
	Face Area	m^2	0.31	0.31	0.31
Fan	Type		Sirocco Fan	Sirocco Fan	Sirocco Fan
	Motor Output x Number	W	350 x 1	350 x 1	350 x 1
	Running Current	A	2.3	2.3	2.3
	Air Flow Rate(H / M / L)	CMM	28.0 / 24.0 / 21.0	32.0 / 28.0 / 24.0	38.0 / 33.0 / 28.0
	(High Mode-factory set)	cfm	989 / 848 / 742	1130 / 989 / 848	1342 / 1165 / 989
	External Static Pressure	mmAq(Pa)	6(59)	6(59)	6(59)
	Air Flow Rate(H / M / L)	CMM	28.0 / 24.0 / 21.0	32.0 / 28.0 / 24.0	38.0 / 33.0 / 28.0
	(Standard Mode)	cfm	989 / 848 / 742	1130 / 989 / 848	1342 / 1165 / 989
	External Static Pressure	mmAq(Pa)	5(49)	5(49)	5(49)
	Drive		Direct	Direct	Direct
	Motor type		BLDC	BLDC	BLDC
Temperature Control			Microprocessor, Thermostat for cooling and heating		
Sound Absorbing Thermal Insulation Material			Foamed polystrene	Foamed polystrene	Foamed polystrene
Air Filter			-	-	-
Safety Device			Fuse	Fuse	Fuse
Pipe Connections	Liquid Side	mm(inch)	Ø9.52(3/8)	Ø9.52(3/8)	Ø9.52(3/8)
	Gas Side	mm(inch)	Ø15.88(5/8)	Ø15.88(5/8)	Ø15.88(5/8)
	Drain Pipe(Internal Dia.)	mm(inch)	25(1)	25(1)	25(1)
Net Weight	Body	kg(lbs)	38.0(84)	38.0(84)	39.5(87)
Noise Level(Sound Pressure, 1.5m, H / M / L)		dB(A)	36 / 34 / 33	37 / 36 / 34	38 / 37 / 36
Power Supply		Ø, V, Hz	1, 220-240, 50	1, 220-240, 50	1, 220-240, 50
			1, 220, 60	1, 220, 60	1, 220, 60
Refrigerant Control			EEV	EEV	EEV
Transmission Cable		mm^2	CVV-SB 1.0~1.5 x 2C	CVV-SB 1.0~1.5 x 2C	CVV-SB 1.0~1.5 x 2C

Notes:

1. Capacities are based on the following conditions:
   - Cooling
     - Indoor temp. 27°C[80.6°F]DB/ 19°C[66.2°F]WB
     - Outdoor temp. 35°C[95°F]DB/ 24°C[75.2°F]WB
     - Interconnecting Piping Length 7.5m
     - Level Difference of Zero
   - Heating
     - Indoor temp. 20°C[68°F]DB/ 15°C[59°F]WB
     - Outdoor temp. 7°C[44.6°F]DB/ 6°C[42.8°F]WB
     - Interconnecting Piping Length 7.5m
     - Level Difference of Zero
2. Capacities are net capacities
3. Due to our policy of innovation some specifications may be changed without prior notification
4. Wiring cable size must comply with the applicable local and national codes. And “Electric characteristics” chapter should be considered for electrical work and design. Especially the power cable and circuit breaker should be selected in accordance with that.
4. EEV : Electronic Expansion Valve
5. Sound pressure levels are measured at 50Pa External Static Pressure condition.
6. Anechoic chamber conversion value is measured at 1.5 m downward from unit centre.
   The values depends on the ambient conditions and values are normally higher in actual operation.

Conversion Formula
kcal/h= kW x 860
Btu/h = kW x 3412
cfm = m^3/min x 35.3
l/s = CMM x 1000/60

2. Specifications

Type			Ceiling Concealed Duct - Middle Static	
Model		Unit	ARNU48GM3A4	ARNU54GM3A4
Cooling Capacity		kW	14.1	15.8
		kcal/h	12,100	13,600
		Btu/h	48,100	54,000
Heating Capacity		kW	15.9	18.0
		kcal/h	13,600	15,500
		Btu/h	54,200	61,400
Casing			Galvanized Steel Plate	Galvanized Steel Plate
Dimensions(WxHxD)	Body	mm	1250 x 360 x 700	1250 x 360 x 700
		inch	49-7/32 x 14-3/16 x 27-9/16	49-7/32 x 14-3/16 x 27-9/16
Coil	Rows x Columns x FPI		3 x 16 x 18	3 x 16 x 18
	Face Area	m^2	0.36	0.36
Fan	Type		Sirocco Fan	Sirocco Fan
	Motor Output x Number	W	350 x 1	350 x 1
	Running Current	A	2.5	2.5
	Air Flow Rate(H / M / L)	CMM	40.0 / 34.0 / 28.0	50.0 / 45.0 / 40.0
	(High Mode-factory set)	cfm	1413 / 1201 / 989	1766 / 1589 / 1413
	External Static Pressure	mmAq(Pa)	6(59)	6(59)
	Air Flow Rate(H / M / L)	CMM	40.0 / 34.0 / 28.0	50.0 / 45.0 / 40.0
	(Standard Mode)	cfm	1413 / 1201 / 989	1766 / 1589 / 1413
	External Static Pressure	mmAq(Pa)	5(49)	5(49)
	Drive		Direct	Direct
	Motor type		BLDC	BLDC
Temperature Control			Microprocessor, Thermostat for cooling and heating	
Sound Absorbing Thermal Insulation Material			Foamed polystrene	Foamed polystrene
Air Filter			-	-
Safety Device			Fuse	Fuse
Pipe Connections	Liquid Side	mm(inch)	Ø9.52(3/8)	Ø9.52(3/8)
	Gas Side	mm(inch)	Ø15.88(5/8)	Ø19.05(3/4)
	Drain Pipe(Internal Dia.)	mm(inch)	25(1)	25(1)
Net Weight	Body	kg(lbs)	44(97)	44(97)
Noise Level(Sound Pressure, 1.5m, H / M / L)		dB(A)	39 / 37 / 35	42 / 40 / 39
Power Supply		Ø, V, Hz	1, 220-240, 50	1, 220-240, 50
			1, 220, 60	1, 220, 60
Refrigerant Control			EEV	EEV
Transmission Cable		mm^2	CVV-SB 1.0~1.5 x 2C	CVV-SB 1.0~1.5 x 2C

Notes:

1. Capacities are based on the following conditions:
   - Cooling
     - Indoor temp. 27°C[80.6°F]DB/ 19°C[66.2°F]WB
     - Outdoor temp. 35°C[95°F]DB/ 24°C[75.2°F]WB
     - Interconnecting Piping Length 7.5m
     - Level Difference of Zero
   - Heating
     - Indoor temp. 20°C[68°F]DB/ 15°C[59°F]WB
     - Outdoor temp. 7°C[44.6°F]DB/ 6°C[42.8°F]WB
     - Interconnecting Piping Length 7.5m
     - Level Difference of Zero
2. Capacities are net capacities
3. Due to our policy of innovation some specifications may be changed without prior notification
4. Wiring cable size must comply with the applicable local and national codes. And “Electric characteristics” chapter should be considered for electrical work and design. Especially the power cable and circuit breaker should be selected in accordance with that.
4. EEV : Electronic Expansion Valve
5. Sound pressure levels are measured at 50Pa External Static Pressure condition.
6. Anechoic chamber conversion value is measured at 1.5 m downward from unit centre.
   The values depends on the ambient conditions and values are normally higher in actual operation.

Conversion Formula
kcal/h= kW x 860
Btu/h = kW x 3412
cfm = m^3/min x 35.3
l/s = CMM x 1000/60

3. Dimensions & Gravity point

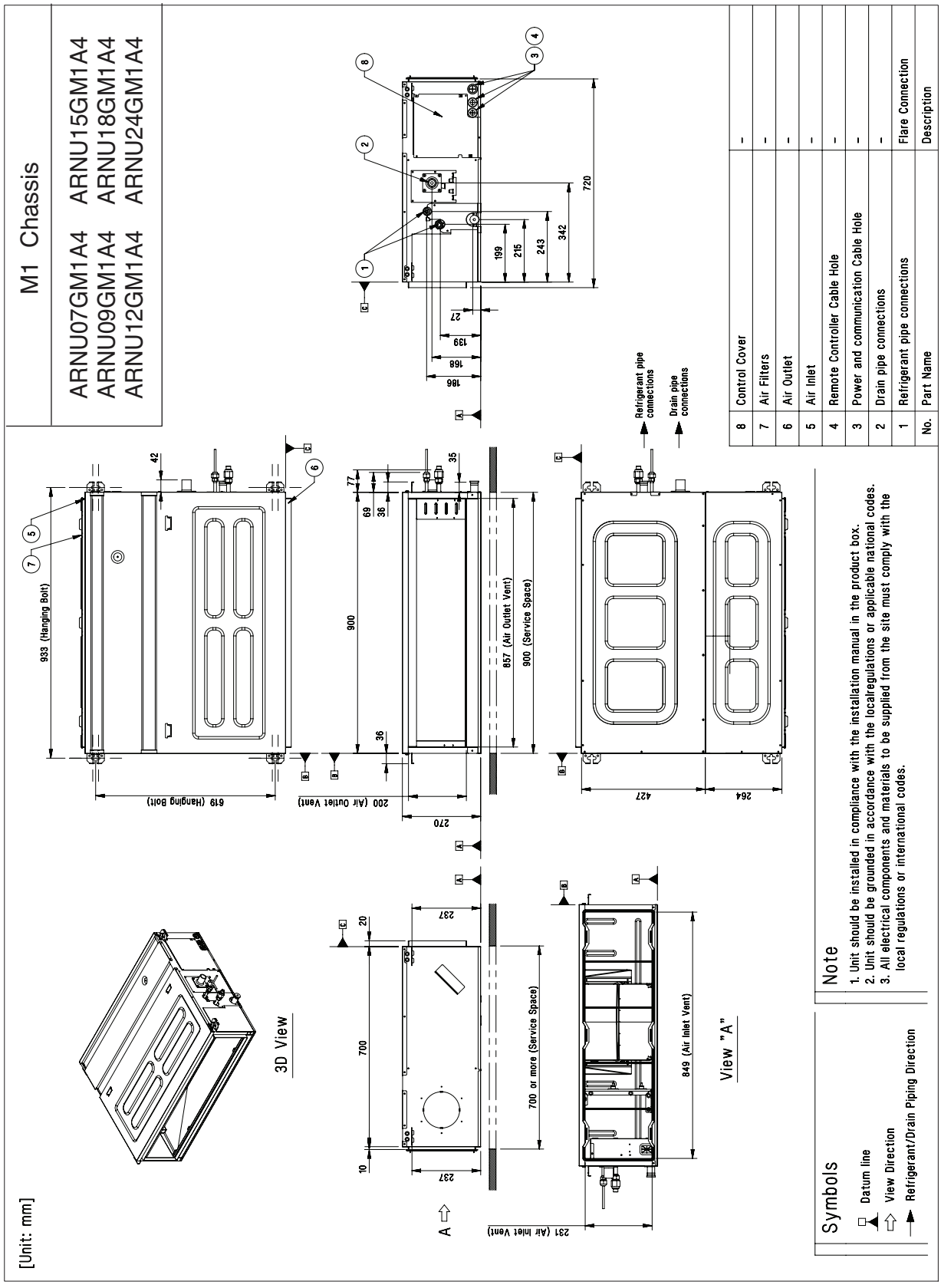

3. Dimensions & Gravity point

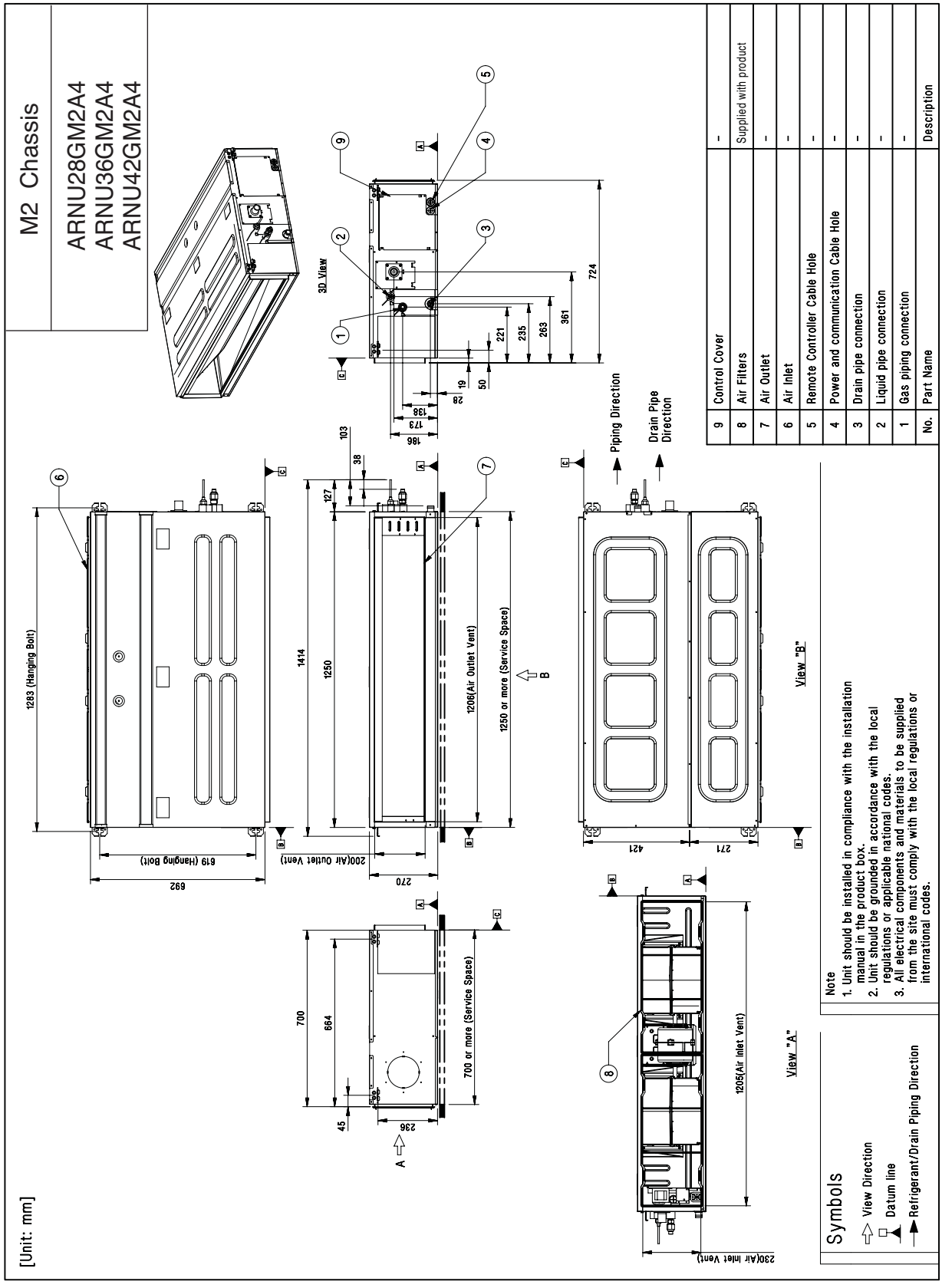

No.	Part Name	Description
9	Control Cover	-
8	Air Filters	Supplied with product
7	Air Outlet	-
6	Air Inlet	-
5	Remote Controller Cable Hole	-
4	Power and communication Cable Hole	-
3	Drain pipe connection	-
2	Liquid pipe connection	-
1	Gas piping connection	-

Symbols
- View Direction
- Datum line
- Refrigerant/Drain Piping Direction

Note
1. Unit should be installed in compliance with the installation manual in the product box.
2. Unit should be grounded in accordance with the local regulations or applicable national codes.
3. All electrical components and materials to be supplied from the site must comply with the local regulations or international codes.

3. Dimensions & Gravity point

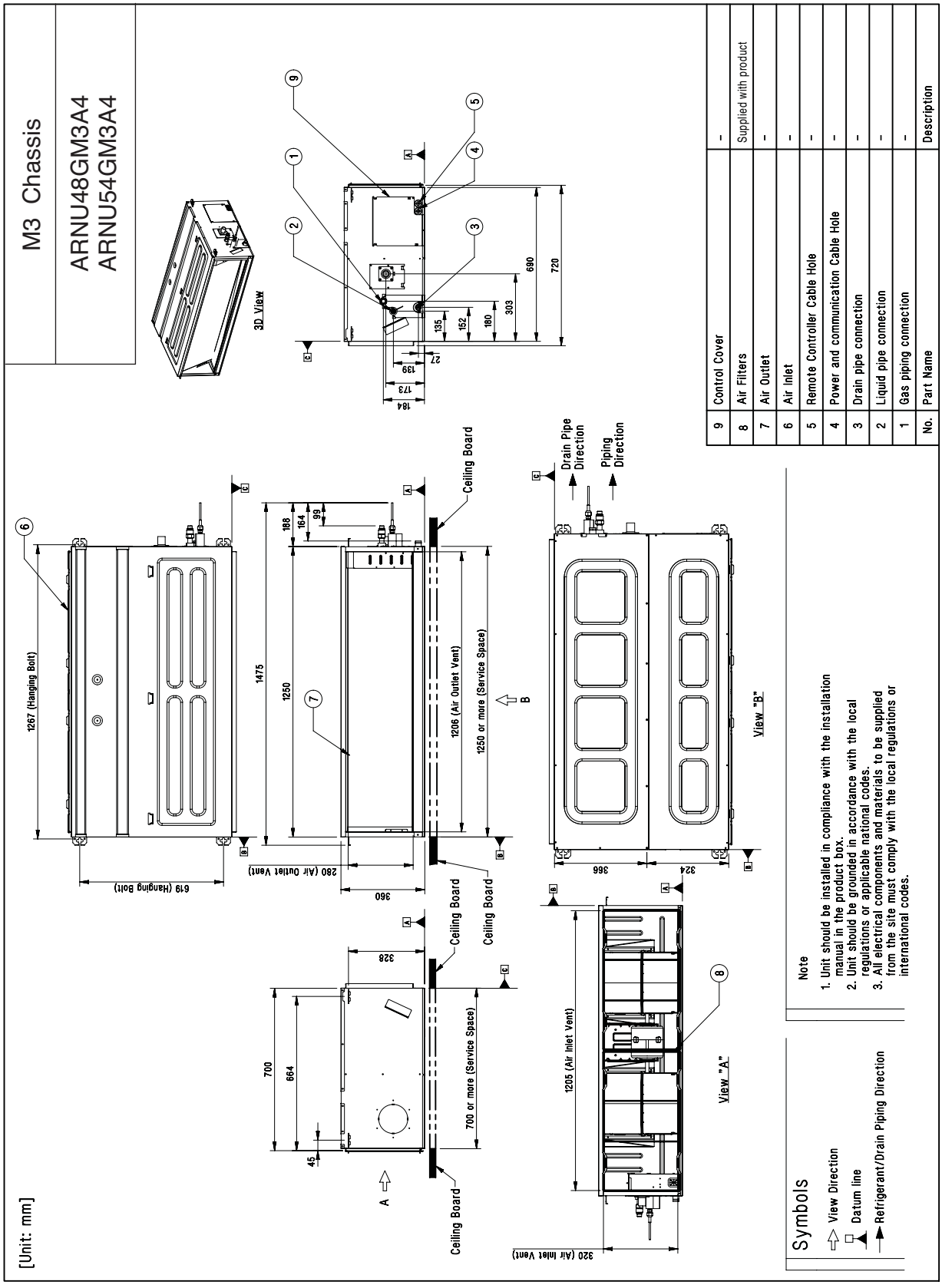

4. Piping Diagrams

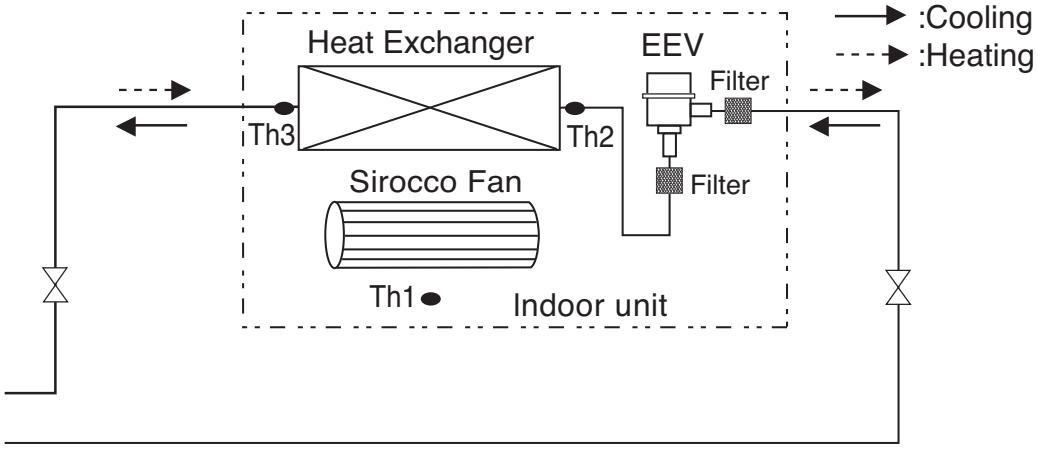

Refrigerant pipe connection port diameter

[Unit: mm(inch)]

MODEL	GAS	LIQUID
ARNU07GM1A4	Ø12.7(1/2)	Ø6.35(1/4)
ARNU09GM1A4	Ø12.7(1/2)	Ø6.35(1/4)
ARNU12GM1A4	Ø12.7(1/2)	Ø6.35(1/4)
ARNU15GM1A4	Ø12.7(1/2)	Ø6.35(1/4)
ARNU18GM1A4	Ø12.7(1/2)	Ø6.35(1/4)
ARNU24GM1A4	Ø15.88(5/8)	Ø9.52(3/8)
ARNU28GM2A4	Ø15.88(5/8)	Ø9.52(3/8)
ARNU36GM2A4	Ø15.88(5/8)	Ø9.52(3/8)
ARNU42GM2A4	Ø15.88(5/8)	Ø9.52(3/8)
ARNU48GM3A4	Ø15.88(5/8)	Ø9.52(3/8)
ARNU54GM3A4	Ø19.05(3/4)	Ø9.52(3/8)

LOC.	Description	PCB Connector (Color)
Th1	Thermistor for room air temperature	CN-ROOM (Yellow)
Th2	Thermistor for pipe in temperature	CN-PIPE_IN (White)
Th3	Thermistor for pipe out temperature	CN-PIPE_OUT (Red)

5. Wiring Diagrams

M1 Chassis

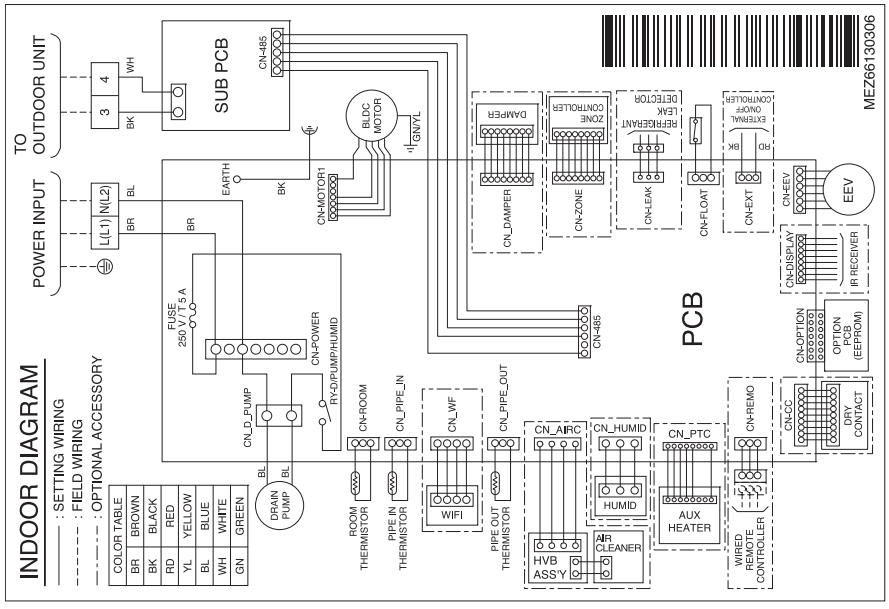

CONNECTOR NUMBER	LOCATION POINT	FUNCTION
CN-POWER	AC Power supply	AC Power line input for indoor controller
CN-MOTOR1	Fan motor output	Motor output of BLDC
CN-MOTOR2	Fan motor output	Motor output of BLDC
CN-D_PUMP	Drain pump output	AC output for drain pump
CN-COM	Communication	Connection between indoor and outdoor
CN-EEV	EEV Output	EEV Control output
CN-FLOAT	Float switch input	Float switch sensing
CN-PIPE_IN	Suction pipe sensor	Pipe in thermistor
CN-PIPE_OUT	Discharge pipe sensor	Pipe out thermistor
CN-ROOM	Room sensor	Room air thermistor
CN-REMO	Remote controller	Remote control line
CN-ZONE	Zontroller	Zone control line
CN-DISPLAY	RF Remote controller	RF Remote control line
CN-CC	Dry contact	Dry contact line
CN-EXT	External On/Off	External On/Off signal input

	Function	Description	Setting Off	Setting On	Default
SW1	Communication	N/A (Default)	-	-	Off
SW2	Cycle	N/A (Default)	-	-	Off
SW3	Group Control	Selection of Master or Slave	Master	Slave	Off
SW4	Dry Contact Mode	Selection of Dry Contact Mode	Wired/Wireless remote controller selection of Manual or Auto operation Mode	Auto	Off
SW5	Installation	Fan continuous operation	Continuous operation Removal	-	Off
SW6	Heater linkage	N/A	-	-	Off
SW7	Ventilator linkage	Selection of Ventilator linkage	Linkage Removal	Working	Off
	Vane selection (Console)	Selection of up/down side Vane	Up side + Down side Vane	Up side Vane Only	
	Region selection	Selection tropical region	General model	Tropical model	
SW8	Etc.	Spare	-	-	Off

⚠ CAUTION

For Multi V Models, DIP switch 1, 2, 6, 8 must be set OFF.

5. Wiring Diagrams

M2 / M3 Chassis

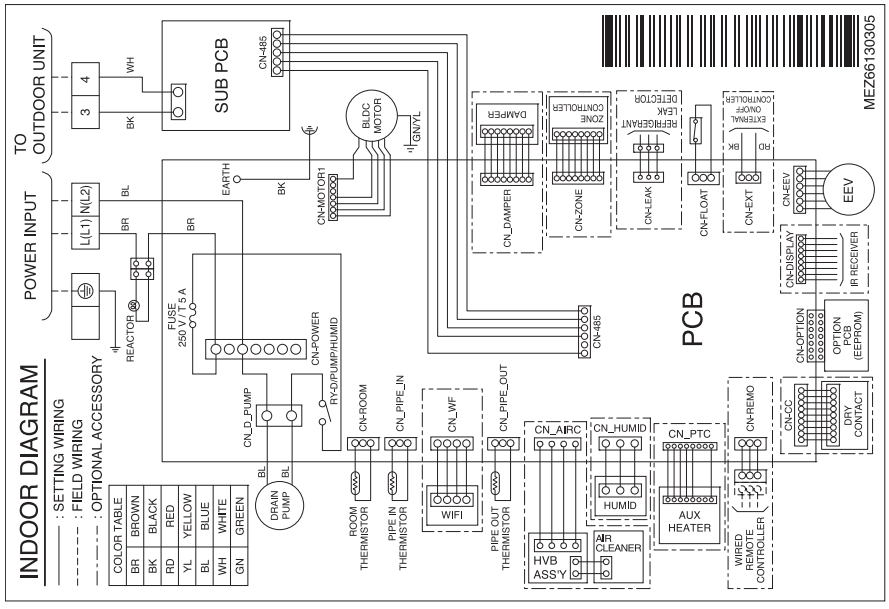

CONNECTOR NUMBER	LOCATION POINT	FUNCTION
CN-POWER	AC Power supply	AC Power line input for indoor controller
CN-MOTOR1	Fan motor output	Motor output of BLDC
CN-MOTOR2	Fan motor output	Motor output of BLDC
CN-D_PUMP	Drain pump output	AC output for drain pump
CN-COM	Communication	Connection between indoor and outdoor
CN-EEV	EEV Output	EEV Control output
CN-FLOAT	Float switch input	Float switch sensing
CN-PIPE_IN	Suction pipe sensor	Pipe in thermistor
CN-PIPE_OUT	Discharge pipe sensor	Pipe out thermistor
CN-ROOM	Room sensor	Room air thermistor
CN-REMO	Remote controller	Remote control line
CN-ZONE	Zontroller	Zone control line
CN-DISPLAY	RF Remote controller	RF Remote control line
CN-CC	Dry contact	Dry contact line
CN-EXT	External On/Off	External On/Off signal input

	Function	Description	Setting Off	Setting On	Default
SW1	Communication	N/A (Default)	-	-	Off
SW2	Cycle	N/A (Default)	-	-	Off
SW3	Group Control	Selection of Master or Slave	Master	Slave	Off
SW4	Dry Contact Mode	Selection of Dry Contact Mode	Wired/Wireless remote controller selection of Manual or Auto operation Mode	Auto	Off
SW5	Installation	Fan continuous operation	Continuous operation Removal	-	Off
SW6	Heater linkage	N/A	-	-	Off
SW7	Ventilator linkage	Selection of Ventilator linkage	Linkage Removal	Working	Off
	Vane selection (Console)	Selection of up/down side Vane	Up side + Down side Vane	Up side Vane Only	
	Region selection	Selection tropical region	General model	Tropical model	
SW8	Etc.	Spare	-	-	Off

⚠ CAUTION

For Multi V Models, DIP switch 1, 2, 6, 8 must be set OFF.

6. Capacity Tables

6.1 Cooling Capacity

Cooling capacity

Capacity Index	Outdoor air temp. (DB, °C)	Indoor air temp. (DB/WB, °C)													
		20		23		26		27		28		30		32	
		14		16		18		19		20		22		24	
		TC	SHC	TC	SHC	TC	SHC	TC	SHC	TC	SHC	TC	SHC	TC	SHC
		kW	kW	kW	kW	kW	kW	kW	kW	kW	kW	kW	kW	kW	kW
2.2	10	1.5	1.4	1.8	1.5	2.0	1.7	2.2	1.7	2.4	1.8	2.6	1.8	2.9	1.8
	12	1.5	1.4	1.8	1.5	2.0	1.7	2.2	1.7	2.4	1.8	2.6	1.8	2.9	1.8
	14	1.5	1.4	1.8	1.5	2.0	1.7	2.2	1.7	2.4	1.8	2.6	1.8	2.8	1.8
	16	1.5	1.4	1.8	1.5	2.0	1.7	2.2	1.7	2.4	1.8	2.6	1.8	2.8	1.7
	18	1.5	1.4	1.8	1.5	2.0	1.7	2.2	1.7	2.4	1.8	2.6	1.8	2.7	1.7
	20	1.5	1.4	1.8	1.5	2.0	1.7	2.2	1.7	2.4	1.8	2.6	1.8	2.7	1.7
	21	1.5	1.4	1.8	1.5	2.0	1.7	2.2	1.7	2.4	1.8	2.6	1.8	2.7	1.7
	23	1.5	1.4	1.8	1.5	2.0	1.7	2.2	1.7	2.4	1.8	2.6	1.8	2.6	1.7
	25	1.5	1.4	1.8	1.5	2.0	1.7	2.2	1.7	2.4	1.8	2.6	1.8	2.6	1.6
	27	1.5	1.4	1.8	1.5	2.0	1.7	2.2	1.7	2.4	1.8	2.5	1.8	2.6	1.6
	29	1.5	1.4	1.8	1.5	2.0	1.7	2.2	1.7	2.4	1.8	2.5	1.7	2.5	1.6
	31	1.5	1.4	1.8	1.5	2.0	1.7	2.2	1.7	2.4	1.8	2.5	1.7	2.5	1.6
	33	1.5	1.4	1.8	1.5	2.0	1.7	2.2	1.7	2.4	1.8	2.4	1.7	2.4	1.5
	35	1.5	1.4	1.8	1.5	2.0	1.7	2.2	1.7	2.4	1.8	2.4	1.7	2.4	1.5
	37	1.5	1.4	1.8	1.5	2.0	1.7	2.2	1.7	2.3	1.7	2.3	1.6	2.4	1.5
	39	1.5	1.4	1.8	1.5	2.0	1.7	2.2	1.7	2.2	1.7	2.3	1.6	2.4	1.5
2.8	10	1.9	1.8	2.2	2.0	2.6	2.2	2.8	2.2	3.0	2.3	3.4	2.4	3.7	2.3
	12	1.9	1.8	2.2	2.0	2.6	2.2	2.8	2.2	3.0	2.3	3.4	2.4	3.6	2.3
	14	1.9	1.8	2.2	2.0	2.6	2.2	2.8	2.2	3.0	2.3	3.4	2.4	3.6	2.3
	16	1.9	1.8	2.2	2.0	2.6	2.2	2.8	2.2	3.0	2.3	3.4	2.4	3.5	2.2
	18	1.9	1.8	2.2	2.0	2.6	2.2	2.8	2.2	3.0	2.3	3.4	2.4	3.5	2.2
	20	1.9	1.8	2.2	2.0	2.6	2.2	2.8	2.2	3.0	2.3	3.4	2.4	3.4	2.2
	21	1.9	1.8	2.2	2.0	2.6	2.2	2.8	2.2	3.0	2.3	3.4	2.4	3.4	2.2
	23	1.9	1.8	2.2	2.0	2.6	2.2	2.8	2.2	3.0	2.3	3.4	2.4	3.4	2.2
	25	1.9	1.8	2.2	2.0	2.6	2.2	2.8	2.2	3.0	2.3	3.3	2.3	3.3	2.1
	27	1.9	1.8	2.2	2.0	2.6	2.2	2.8	2.2	3.0	2.3	3.2	2.3	3.3	2.1
	29	1.9	1.8	2.2	2.0	2.6	2.2	2.8	2.2	3.0	2.3	3.2	2.2	3.2	2.1
	31	1.9	1.8	2.2	2.0	2.6	2.2	2.8	2.2	3.0	2.3	3.2	2.2	3.2	2.0
	33	1.9	1.8	2.2	2.0	2.6	2.2	2.8	2.2	3.0	2.3	3.1	2.2	3.1	2.0
	35	1.9	1.8	2.2	2.0	2.6	2.2	2.8	2.2	3.0	2.3	3.0	2.2	3.1	2.0
	37	1.9	1.8	2.2	2.0	2.6	2.2	2.8	2.2	2.9	2.2	3.0	2.1	3.0	1.9
	39	1.9	1.8	2.2	2.0	2.6	2.2	2.8	2.2	2.8	2.2	2.9	2.1	3.0	1.9
3.6	10	2.4	2.3	2.9	2.5	3.3	2.7	3.6	2.8	3.9	2.9	4.3	3.0	4.7	3.0
	12	2.4	2.3	2.9	2.5	3.3	2.7	3.6	2.8	3.9	2.9	4.3	3.0	4.7	3.0
	14	2.4	2.3	2.9	2.5	3.3	2.7	3.6	2.8	3.9	2.9	4.3	3.0	4.6	2.9
	16	2.4	2.3	2.9	2.5	3.3	2.7	3.6	2.8	3.9	2.9	4.3	3.0	4.6	2.9
	18	2.4	2.3	2.9	2.5	3.3	2.7	3.6	2.8	3.9	2.9	4.3	3.0	4.5	2.9
	20	2.4	2.3	2.9	2.5	3.3	2.7	3.6	2.8	3.9	2.9	4.3	3.0	4.4	2.8
	21	2.4	2.3	2.9	2.5	3.3	2.7	3.6	2.8	3.9	2.9	4.3	3.0	4.4	2.8
	23	2.4	2.3	2.9	2.5	3.3	2.7	3.6	2.8	3.9	2.9	4.3	3.0	4.3	2.7
	25	2.4	2.3	2.9	2.5	3.3	2.7	3.6	2.8	3.9	2.9	4.3	3.0	4.3	2.7
	27	2.4	2.3	2.9	2.5	3.3	2.7	3.6	2.8	3.9	2.9	4.2	2.9	4.2	2.7
	29	2.4	2.3	2.9	2.5	3.3	2.7	3.6	2.8	3.9	2.9	4.1	2.9	4.2	2.6
	31	2.4	2.3	2.9	2.5	3.3	2.7	3.6	2.8	3.9	2.9	4.1	2.8	4.1	2.6
	33	2.4	2.3	2.9	2.5	3.3	2.7	3.6	2.8	3.9	2.9	4.0	2.8	4.0	2.5
	35	2.4	2.3	2.9	2.5	3.3	2.7	3.6	2.8	3.9	2.9	3.9	2.7	4.0	2.5
	37	2.4	2.3	2.9	2.5	3.3	2.7	3.6	2.8	3.8	2.8	3.8	2.7	3.9	2.5
	39	2.4	2.3	2.9	2.5	3.3	2.7	3.6	2.8	3.7	2.7	3.8	2.6	3.9	2.4

Notes:

TC: Total Capacity(kW)

SHC: Sensible Heat Capacity(kW)

1. Capacity tables show the representative value of conditions which may occur.
2. Refer to Capacity Correction Factor in the outdoor unit PDB for the actual performance data of each indoor unit and outdoor unit combination.

6. Capacity Tables

Cooling capacity

Capacity Index	Outdoor air temp. (DB, °C)	Indoor air temp. (DB/WB, °C)													
		20		23		26		27		28		30		32	
		14		16		18		19		20		22		24	
		TC	SHC	TC	SHC	TC	SHC	TC	SHC	TC	SHC	TC	SHC	TC	SHC
		kW	kW	kW	kW	kW	kW	kW	kW	kW	kW	kW	kW	kW	kW
4.5	10	3.0	2.9	3.6	3.2	4.2	3.4	4.5	3.5	4.8	3.6	5.4	3.8	5.9	3.7
	12	3.0	2.9	3.6	3.2	4.2	3.4	4.5	3.5	4.8	3.6	5.4	3.8	5.8	3.7
	14	3.0	2.9	3.6	3.2	4.2	3.4	4.5	3.5	4.8	3.6	5.4	3.8	5.8	3.6
	16	3.0	2.9	3.6	3.2	4.2	3.4	4.5	3.5	4.8	3.6	5.4	3.8	5.7	3.6
	18	3.0	2.9	3.6	3.2	4.2	3.4	4.5	3.5	4.8	3.6	5.4	3.8	5.6	3.6
	20	3.0	2.9	3.6	3.2	4.2	3.4	4.5	3.5	4.8	3.6	5.4	3.8	5.5	3.5
	21	3.0	2.9	3.6	3.2	4.2	3.4	4.5	3.5	4.8	3.6	5.4	3.8	5.5	3.5
	23	3.0	2.9	3.6	3.2	4.2	3.4	4.5	3.5	4.8	3.6	5.4	3.8	5.4	3.4
	25	3.0	2.9	3.6	3.2	4.2	3.4	4.5	3.5	4.8	3.6	5.3	3.7	5.3	3.4
	27	3.0	2.9	3.6	3.2	4.2	3.4	4.5	3.5	4.8	3.6	5.2	3.6	5.3	3.4
	29	3.0	2.9	3.6	3.2	4.2	3.4	4.5	3.5	4.8	3.6	5.1	3.6	5.2	3.3
	31	3.0	2.9	3.6	3.2	4.2	3.4	4.5	3.5	4.8	3.6	5.1	3.5	5.1	3.2
	33	3.0	2.9	3.6	3.2	4.2	3.4	4.5	3.5	4.8	3.6	4.9	3.5	5.0	3.2
	35	3.0	2.9	3.6	3.2	4.2	3.4	4.5	3.5	4.8	3.6	4.9	3.4	4.9	3.2
	37	3.0	2.9	3.6	3.2	4.2	3.4	4.5	3.5	4.7	3.5	4.8	3.4	4.9	3.1
	39	3.0	2.9	3.6	3.2	4.2	3.4	4.5	3.5	4.6	3.4	4.7	3.3	4.8	3.0
5.6	10	3.8	3.4	4.5	3.7	5.2	4.0	5.6	4.1	6.0	4.2	6.7	4.4	7.4	4.4
	12	3.8	3.4	4.5	3.7	5.2	4.0	5.6	4.1	6.0	4.2	6.7	4.4	7.3	4.3
	14	3.8	3.4	4.5	3.7	5.2	4.0	5.6	4.1	6.0	4.2	6.7	4.4	7.2	4.3
	16	3.8	3.4	4.5	3.7	5.2	4.0	5.6	4.1	6.0	4.2	6.7	4.4	7.1	4.2
	18	3.8	3.4	4.5	3.7	5.2	4.0	5.6	4.1	6.0	4.2	6.7	4.4	7.0	4.1
	20	3.8	3.4	4.5	3.7	5.2	4.0	5.6	4.1	6.0	4.2	6.7	4.4	6.9	4.1
	21	3.8	3.4	4.5	3.7	5.2	4.0	5.6	4.1	6.0	4.2	6.7	4.4	6.8	4.1
	23	3.8	3.4	4.5	3.7	5.2	4.0	5.6	4.1	6.0	4.2	6.7	4.4	6.7	4.0
	25	3.8	3.4	4.5	3.7	5.2	4.0	5.6	4.1	6.0	4.2	6.6	4.3	6.6	3.9
	27	3.8	3.4	4.5	3.7	5.2	4.0	5.6	4.1	6.0	4.2	6.4	4.2	6.6	3.9
	29	3.8	3.4	4.5	3.7	5.2	4.0	5.6	4.1	6.0	4.2	6.4	4.2	6.5	3.8
	31	3.8	3.4	4.5	3.7	5.2	4.0	5.6	4.1	6.0	4.2	6.3	4.1	6.4	3.8
	33	3.8	3.4	4.5	3.7	5.2	4.0	5.6	4.1	6.0	4.2	6.2	4.0	6.3	3.7
	35	3.8	3.4	4.5	3.7	5.2	4.0	5.6	4.1	6.0	4.2	6.0	4.0	6.2	3.6
	37	3.8	3.4	4.5	3.7	5.2	4.0	5.6	4.1	5.8	4.1	5.9	3.9	6.1	3.6
	39	3.8	3.4	4.5	3.7	5.2	4.0	5.6	4.1	5.7	4.0	5.8	3.8	6.0	3.5
7.1	10	4.8	4.3	5.7	4.7	6.6	5.1	7.1	5.2	7.6	5.3	8.5	5.6	9.3	5.5
	12	4.8	4.3	5.7	4.7	6.6	5.1	7.1	5.2	7.6	5.3	8.5	5.6	9.2	5.5
	14	4.8	4.3	5.7	4.7	6.6	5.1	7.1	5.2	7.6	5.3	8.5	5.6	9.1	5.4
	16	4.8	4.3	5.7	4.7	6.6	5.1	7.1	5.2	7.6	5.3	8.5	5.6	9.0	5.3
	18	4.8	4.3	5.7	4.7	6.6	5.1	7.1	5.2	7.6	5.3	8.5	5.6	8.8	5.2
	20	4.8	4.3	5.7	4.7	6.6	5.1	7.1	5.2	7.6	5.3	8.5	5.6	8.7	5.2
	21	4.8	4.3	5.7	4.7	6.6	5.1	7.1	5.2	7.6	5.3	8.5	5.6	8.7	5.1
	23	4.8	4.3	5.7	4.7	6.6	5.1	7.1	5.2	7.6	5.3	8.5	5.6	8.5	5.1
	25	4.8	4.3	5.7	4.7	6.6	5.1	7.1	5.2	7.6	5.3	8.4	5.5	8.4	5.0
	27	4.8	4.3	5.7	4.7	6.6	5.1	7.1	5.2	7.6	5.3	8.2	5.4	8.3	4.9
	29	4.8	4.3	5.7	4.7	6.6	5.1	7.1	5.2	7.6	5.3	8.1	5.3	8.2	4.8
	31	4.8	4.3	5.7	4.7	6.6	5.1	7.1	5.2	7.6	5.3	8.0	5.2	8.1	4.8
	33	4.8	4.3	5.7	4.7	6.6	5.1	7.1	5.2	7.6	5.3	7.8	5.1	7.9	4.7
	35	4.8	4.3	5.7	4.7	6.6	5.1	7.1	5.2	7.6	5.3	7.7	5.0	7.8	4.6
	37	4.8	4.3	5.7	4.7	6.6	5.1	7.1	5.2	7.4	5.2	7.5	4.9	7.7	4.6
	39	4.8	4.3	5.7	4.7	6.6	5.1	7.1	5.2	7.2	5.1	7.4	4.8	7.6	4.5

Notes:

TC: Total Capacity(kW)

SHC: Sensible Heat Capacity(kW)

1. Capacity tables show the representative value of conditions which may occur.
2. Refer to Capacity Correction Factor in the outdoor unit PDB for the actual performance data of each indoor unit and outdoor unit combination.

6. Capacity Tables

Cooling capacity

Capacity Index	Outdoor air temp. (DB, °C)	Indoor air temp. (DB/WB, °C)													
		20		23		26		27		28		30		32	
		14		16		18		19		20		22		24	
		TC	SHC	TC	SHC	TC	SHC	TC	SHC	TC	SHC	TC	SHC	TC	SHC
		kW	kW	kW	kW	kW	kW	kW	kW	kW	kW	kW	kW	kW	kW
8.2	10	5.5	5.0	6.6	5.5	7.7	6.0	8.2	6.1	8.7	6.2	9.8	6.5	10.8	6.5
	12	5.5	5.0	6.6	5.5	7.7	6.0	8.2	6.1	8.7	6.2	9.8	6.5	10.6	6.4
	14	5.5	5.0	6.6	5.5	7.7	6.0	8.2	6.1	8.7	6.2	9.8	6.5	10.5	6.3
	16	5.5	5.0	6.6	5.5	7.7	6.0	8.2	6.1	8.7	6.2	9.8	6.5	10.4	6.2
	18	5.5	5.0	6.6	5.5	7.7	6.0	8.2	6.1	8.7	6.2	9.8	6.5	10.2	6.1
	20	5.5	5.0	6.6	5.5	7.7	6.0	8.2	6.1	8.7	6.2	9.8	6.5	10.1	6.0
	21	5.5	5.0	6.6	5.5	7.7	6.0	8.2	6.1	8.7	6.2	9.8	6.5	10.0	6.0
	23	5.5	5.0	6.6	5.5	7.7	6.0	8.2	6.1	8.7	6.2	9.8	6.5	9.9	5.9
	25	5.5	5.0	6.6	5.5	7.7	6.0	8.2	6.1	8.7	6.2	9.7	6.4	9.7	5.8
	27	5.5	5.0	6.6	5.5	7.7	6.0	8.2	6.1	8.7	6.2	9.4	6.3	9.6	5.8
	29	5.5	5.0	6.6	5.5	7.7	6.0	8.2	6.1	8.7	6.2	9.3	6.2	9.5	5.7
	31	5.5	5.0	6.6	5.5	7.7	6.0	8.2	6.1	8.7	6.2	9.2	6.1	9.3	5.6
	33	5.5	5.0	6.6	5.5	7.7	6.0	8.2	6.1	8.7	6.2	9.0	6.0	9.2	5.5
	35	5.5	5.0	6.6	5.5	7.7	6.0	8.2	6.1	8.7	6.2	8.9	5.9	9.0	5.4
	37	5.5	5.0	6.6	5.5	7.7	6.0	8.2	6.1	8.5	6.1	8.7	5.8	8.9	5.3
	39	5.5	5.0	6.6	5.5	7.7	6.0	8.2	6.1	8.4	6.0	8.5	5.7	8.8	5.3
10.6	10	7.2	6.4	8.5	7.1	9.9	7.7	10.6	7.8	11.3	8.1	12.7	8.4	13.9	8.4
	12	7.2	6.4	8.5	7.1	9.9	7.7	10.6	7.8	11.3	8.1	12.7	8.4	13.7	8.2
	14	7.2	6.4	8.5	7.1	9.9	7.7	10.6	7.8	11.3	8.1	12.7	8.4	13.6	8.2
	16	7.2	6.4	8.5	7.1	9.9	7.7	10.6	7.8	11.3	8.1	12.7	8.4	13.4	8.0
	18	7.2	6.4	8.5	7.1	9.9	7.7	10.6	7.8	11.3	8.1	12.7	8.4	13.2	7.9
	20	7.2	6.4	8.5	7.1	9.9	7.7	10.6	7.8	11.3	8.1	12.7	8.4	13.0	7.8
	21	7.2	6.4	8.5	7.1	9.9	7.7	10.6	7.8	11.3	8.1	12.7	8.4	12.9	7.8
	23	7.2	6.4	8.5	7.1	9.9	7.7	10.6	7.8	11.3	8.1	12.7	8.4	12.8	7.7
	25	7.2	6.4	8.5	7.1	9.9	7.7	10.6	7.8	11.3	8.1	12.5	8.3	12.6	7.5
	27	7.2	6.4	8.5	7.1	9.9	7.7	10.6	7.8	11.3	8.1	12.2	8.1	12.4	7.5
	29	7.2	6.4	8.5	7.1	9.9	7.7	10.6	7.8	11.3	8.1	12.1	8.0	12.2	7.3
	31	7.2	6.4	8.5	7.1	9.9	7.7	10.6	7.8	11.3	8.1	11.9	7.9	12.0	7.2
	33	7.2	6.4	8.5	7.1	9.9	7.7	10.6	7.8	11.3	8.1	11.7	7.8	11.8	7.1
	35	7.2	6.4	8.5	7.1	9.9	7.7	10.6	7.8	11.3	8.1	11.4	7.6	11.7	7.0
	37	7.2	6.4	8.5	7.1	9.9	7.7	10.6	7.8	11.0	7.9	11.2	7.5	11.5	6.9
	39	7.2	6.4	8.5	7.1	9.9	7.7	10.6	7.8	10.8	7.7	11.0	7.3	11.3	6.8
12.3	10	8.3	7.5	9.9	8.3	11.5	9.0	12.3	9.1	13.1	9.4	14.7	9.8	16.2	9.7
	12	8.3	7.5	9.9	8.3	11.5	9.0	12.3	9.1	13.1	9.4	14.7	9.8	15.9	9.6
	14	8.3	7.5	9.9	8.3	11.5	9.0	12.3	9.1	13.1	9.4	14.7	9.8	15.8	9.5
	16	8.3	7.5	9.9	8.3	11.5	9.0	12.3	9.1	13.1	9.4	14.7	9.8	15.6	9.3
	18	8.3	7.5	9.9	8.3	11.5	9.0	12.3	9.1	13.1	9.4	14.7	9.8	15.3	9.2
	20	8.3	7.5	9.9	8.3	11.5	9.0	12.3	9.1	13.1	9.4	14.7	9.8	15.1	9.1
	21	8.3	7.5	9.9	8.3	11.5	9.0	12.3	9.1	13.1	9.4	14.7	9.8	15.0	9.0
	23	8.3	7.5	9.9	8.3	11.5	9.0	12.3	9.1	13.1	9.4	14.7	9.8	14.8	8.9
	25	8.3	7.5	9.9	8.3	11.5	9.0	12.3	9.1	13.1	9.4	14.5	9.7	14.6	8.8
	27	8.3	7.5	9.9	8.3	11.5	9.0	12.3	9.1	13.1	9.4	14.1	9.4	14.4	8.6
	29	8.3	7.5	9.9	8.3	11.5	9.0	12.3	9.1	13.1	9.4	14.0	9.3	14.2	8.5
	31	8.3	7.5	9.9	8.3	11.5	9.0	12.3	9.1	13.1	9.4	13.8	9.2	14.0	8.4
	33	8.3	7.5	9.9	8.3	11.5	9.0	12.3	9.1	13.1	9.4	13.5	9.0	13.7	8.3
	35	8.3	7.5	9.9	8.3	11.5	9.0	12.3	9.1	13.1	9.4	13.3	8.8	13.5	8.1
	37	8.3	7.5	9.9	8.3	11.5	9.0	12.3	9.1	12.8	9.2	13.0	8.7	13.4	8.0
	39	8.3	7.5	9.9	8.3	11.5	9.0	12.3	9.1	12.5	9.0	12.8	8.5	13.1	7.9

Notes:

TC: Total Capacity(kW)

SHC: Sensible Heat Capacity(kW)

1. Capacity tables show the representative value of conditions which may occur.
2. Refer to Capacity Correction Factor in the outdoor unit PDB for the actual performance data of each indoor unit and outdoor unit combination.

6. Capacity Tables

Cooling capacity

Capacity Index	Outdoor air temp. (DB, °C)	Indoor air temp. (DB/WB, °C)													
		20		23		26		27		28		30		32	
		14		16		18		19		20		22		24	
		TC	SHC	TC	SHC	TC	SHC	TC	SHC	TC	SHC	TC	SHC	TC	SHC
		kW	kW	kW	kW	kW	kW	kW	kW	kW	kW	kW	kW	kW	kW
14.1	10	9.5	8.7	11.3	9.6	13.2	10.4	14.1	10.6	15.0	10.9	16.9	11.4	18.5	11.3
	12	9.5	8.7	11.3	9.6	13.2	10.4	14.1	10.6	15.0	10.9	16.9	11.4	18.3	11.1
	14	9.5	8.7	11.3	9.6	13.2	10.4	14.1	10.6	15.0	10.9	16.9	11.4	18.1	11.0
	16	9.5	8.7	11.3	9.6	13.2	10.4	14.1	10.6	15.0	10.9	16.9	11.4	17.8	10.8
	18	9.5	8.7	11.3	9.6	13.2	10.4	14.1	10.6	15.0	10.9	16.9	11.4	17.6	10.7
	20	9.5	8.7	11.3	9.6	13.2	10.4	14.1	10.6	15.0	10.9	16.9	11.4	17.3	10.5
	21	9.5	8.7	11.3	9.6	13.2	10.4	14.1	10.6	15.0	10.9	16.9	11.4	17.2	10.5
	23	9.5	8.7	11.3	9.6	13.2	10.4	14.1	10.6	15.0	10.9	16.9	11.4	17.0	10.3
	25	9.5	8.7	11.3	9.6	13.2	10.4	14.1	10.6	15.0	10.9	16.6	11.2	16.7	10.2
	27	9.5	8.7	11.3	9.6	13.2	10.4	14.1	10.6	15.0	10.9	16.2	10.9	16.5	10.0
	29	9.5	8.7	11.3	9.6	13.2	10.4	14.1	10.6	15.0	10.9	16.1	10.8	16.3	9.9
	31	9.5	8.7	11.3	9.6	13.2	10.4	14.1	10.6	15.0	10.9	15.8	10.7	16.0	9.7
	33	9.5	8.7	11.3	9.6	13.2	10.4	14.1	10.6	15.0	10.9	15.5	10.5	15.8	9.6
	35	9.5	8.7	11.3	9.6	13.2	10.4	14.1	10.6	15.0	10.9	15.2	10.3	15.5	9.4
	37	9.5	8.7	11.3	9.6	13.2	10.4	14.1	10.6	14.7	10.6	14.9	10.1	15.3	9.3
	39	9.5	8.7	11.3	9.6	13.2	10.4	14.1	10.6	14.4	10.4	14.7	9.9	15.1	9.2
15.8	10	10.7	10.1	12.7	11.1	14.7	12.1	15.8	12.3	16.9	12.8	18.9	13.3	20.7	13.0
	12	10.7	10.1	12.7	11.1	14.7	12.1	15.8	12.3	16.9	12.8	18.9	13.3	20.5	13.0
	14	10.7	10.1	12.7	11.1	14.7	12.1	15.8	12.3	16.9	12.8	18.9	13.3	20.3	12.8
	16	10.7	10.1	12.7	11.1	14.7	12.1	15.8	12.3	16.9	12.8	18.9	13.3	20.0	12.6
	18	10.7	10.1	12.7	11.1	14.7	12.1	15.8	12.3	16.9	12.8	18.9	13.3	19.6	12.6
	20	10.7	10.1	12.7	11.1	14.7	12.1	15.8	12.3	16.9	12.8	18.9	13.3	19.4	12.3
	21	10.7	10.1	12.7	11.1	14.7	12.1	15.8	12.3	16.9	12.8	18.9	13.3	19.4	12.3
	23	10.7	10.1	12.7	11.1	14.7	12.1	15.8	12.3	16.9	12.8	18.9	13.3	18.9	12.1
	25	10.7	10.1	12.7	11.1	14.7	12.1	15.8	12.3	16.9	12.8	18.7	13.0	18.7	11.8
	27	10.7	10.1	12.7	11.1	14.7	12.1	15.8	12.3	16.9	12.8	18.2	12.8	18.5	11.8
	29	10.7	10.1	12.7	11.1	14.7	12.1	15.8	12.3	16.9	12.8	18.0	12.6	18.2	11.6
	31	10.7	10.1	12.7	11.1	14.7	12.1	15.8	12.3	16.9	12.8	17.8	12.3	18.0	11.4
	33	10.7	10.1	12.7	11.1	14.7	12.1	15.8	12.3	16.9	12.8	17.4	12.3	17.6	11.1
	35	10.7	10.1	12.7	11.1	14.7	12.1	15.8	12.3	16.9	12.8	17.1	12.1	17.4	11.1
	37	10.7	10.1	12.7	11.1	14.7	12.1	15.8	12.3	16.5	12.3	16.7	11.8	17.1	10.9
	39	10.7	10.1	12.7	11.1	14.7	12.1	15.8	12.3	16.0	12.1	16.5	11.6	16.9	10.6

Notes:
TC: Total Capacity(kW)
SHC: Sensible Heat Capacity(kW)
1. Capacity tables show the representative value of conditions which may occur.
2. Refer to Capacity Correction Factor in the outdoor unit PDB for the actual performance data of each indoor unit and outdoor unit combination.

6. Capacity Tables

6.2 Heating Capacity

Heating capacity

Capacity Index	Outdoor air temp.		Indoor air temp. (DB, °C)					
			16	18	20	21	22	24
	DB(°C)	WB(°C)	TC	TC	TC	TC	TC	TC
			kW	kW	kW	kW	kW	kW
2.2	-24.8	-25.0	1.4	1.4	1.4	1.4	1.4	1.4
	-21.8	-22.0	1.7	1.7	1.7	1.7	1.7	1.7
	-19.8	-20.0	1.8	1.8	1.8	1.8	1.8	1.8
	-18.8	-19.0	1.9	1.9	1.9	1.9	1.9	1.9
	-16.7	-17.0	2.0	2.0	2.0	2.0	2.0	2.0
	-14.7	-15.0	2.1	2.1	2.1	2.1	2.1	2.0
	-12.6	-13.0	2.2	2.2	2.2	2.2	2.1	2.1
	-10.5	-11.0	2.3	2.3	2.2	2.2	2.2	2.2
	-9.5	-10.0	2.3	2.3	2.3	2.3	2.3	2.2
	-8.5	-9.1	2.3	2.3	2.3	2.3	2.3	2.2
	-7.0	-7.6	2.4	2.4	2.4	2.4	2.3	2.2
	-5.0	-5.6	2.5	2.5	2.5	2.4	2.3	2.2
	-3.0	-3.7	2.6	2.6	2.5	2.4	2.3	2.2
	0.0	-0.7	2.7	2.6	2.5	2.4	2.3	2.2
	3.0	2.2	2.7	2.7	2.5	2.4	2.3	2.2
	5.0	4.1	2.8	2.7	2.5	2.4	2.3	2.2
	7.0	6.0	2.8	2.7	2.5	2.4	2.3	2.2
	9.0	7.9	2.8	2.7	2.5	2.4	2.3	2.2
	11.0	9.8	2.8	2.7	2.5	2.4	2.3	2.2
	13.0	11.8	2.8	2.7	2.5	2.4	2.3	2.2
	15.0	13.7	2.8	2.7	2.5	2.4	2.3	2.2
2.8	-24.8	-25.0	1.9	1.9	1.8	1.8	1.8	1.8
	-21.8	-22.0	2.2	2.2	2.2	2.2	2.2	2.2
	-19.8	-20.0	2.4	2.4	2.3	2.3	2.3	2.3
	-18.8	-19.0	2.4	2.4	2.4	2.4	2.4	2.4
	-16.7	-17.0	2.5	2.5	2.5	2.5	2.5	2.5
	-14.7	-15.0	2.7	2.7	2.6	2.6	2.6	2.6
	-12.6	-13.0	2.8	2.8	2.8	2.8	2.7	2.7
	-10.5	-11.0	2.9	2.9	2.9	2.9	2.9	2.8
	-9.5	-10.0	3.0	3.0	2.9	2.9	2.9	2.8
	-8.5	-9.1	3.0	3.0	3.0	3.0	3.0	2.8
	-7.0	-7.6	3.1	3.1	3.1	3.1	3.0	2.8
	-5.0	-5.6	3.2	3.2	3.2	3.1	3.0	2.8
	-3.0	-3.7	3.4	3.3	3.2	3.1	3.0	2.8
	0.0	-0.7	3.4	3.3	3.2	3.1	3.0	2.8
	3.0	2.2	3.5	3.4	3.2	3.1	3.0	2.8
	5.0	4.1	3.6	3.4	3.2	3.1	3.0	2.8
	7.0	6.0	3.6	3.4	3.2	3.1	3.0	2.8
	9.0	7.9	3.6	3.4	3.2	3.1	3.0	2.8
	11.0	9.8	3.6	3.4	3.2	3.1	3.0	2.8
	13.0	11.8	3.6	3.4	3.2	3.1	3.0	2.8
	15.0	13.7	3.6	3.4	3.2	3.1	3.0	2.8
3.6	-24.8	-25.0	2.3	2.3	2.3	2.3	2.3	2.3
	-21.8	-22.0	2.8	2.8	2.8	2.8	2.8	2.8
	-19.8	-20.0	2.9	2.9	2.9	2.9	2.9	2.9
	-18.8	-19.0	3.0	3.0	3.0	3.0	3.0	3.0
	-16.7	-17.0	3.1	3.1	3.1	3.1	3.1	3.1
	-14.7	-15.0	3.3	3.3	3.3	3.3	3.3	3.3
	-12.6	-13.0	3.5	3.4	3.4	3.4	3.4	3.4
	-10.5	-11.0	3.6	3.6	3.6	3.6	3.6	3.5
	-9.5	-10.0	3.7	3.7	3.7	3.7	3.7	3.5
	-8.5	-9.1	3.8	3.8	3.7	3.7	3.7	3.5
	-7.0	-7.6	3.9	3.9	3.9	3.8	3.7	3.5
	-5.0	-5.6	4.0	4.0	4.0	3.9	3.7	3.5
	-3.0	-3.7	4.2	4.1	4.0	3.9	3.7	3.5
	0.0	-0.7	4.3	4.1	4.0	3.9	3.7	3.5
	3.0	2.2	4.4	4.3	4.0	3.9	3.7	3.5
	5.0	4.1	4.5	4.3	4.0	3.9	3.7	3.5
	7.0	6.0	4.5	4.3	4.0	3.9	3.7	3.5
	9.0	7.9	4.5	4.3	4.0	3.9	3.7	3.5
	11.0	9.8	4.5	4.3	4.0	3.9	3.7	3.5
	13.0	11.8	4.5	4.3	4.0	3.9	3.7	3.5
	15.0	13.7	4.5	4.3	4.0	3.9	3.7	3.5

Notes:
TC: Total Capacity(kW)
1. Capacity tables show the representative value of conditions which may occur.
2. is shown as reference. When selecting the outdoor units, avoid the outdoor air temperature range shown by .
3. In accordance with operation limits of outdoor unit, applicable range of capacity tables is different.
4. Refer to Capacity Correction Factor in the outdoor unit PDB for the actual performance data of each indoor unit and outdoor unit combination.

6. Capacity Tables

Heating capacity

Capacity Index	Outdoor air temp.		Indoor air temp. (DB, °C)					
			16	18	20	21	22	24
	DB(°C)	WB(°C)	TC	TC	TC	TC	TC	TC
			kW	kW	kW	kW	kW	kW
4.5	-24.8	-25.0	2.9	2.9	2.9	2.9	2.9	2.9
	-21.8	-22.0	3.5	3.5	3.5	3.5	3.5	3.5
	-19.8	-20.0	3.7	3.7	3.7	3.7	3.7	3.6
	-18.8	-19.0	3.8	3.7	3.7	3.7	3.7	3.7
	-16.7	-17.0	3.9	3.9	3.9	3.9	3.9	3.9
	-14.7	-15.0	4.1	4.1	4.1	4.1	4.1	4.1
	-12.6	-13.0	4.3	4.3	4.3	4.3	4.3	4.3
	-10.5	-11.0	4.5	4.5	4.5	4.5	4.5	4.4
	-9.5	-10.0	4.6	4.6	4.6	4.6	4.6	4.4
	-8.5	-9.1	4.7	4.7	4.7	4.7	4.7	4.4
	-7.0	-7.6	4.8	4.8	4.8	4.8	4.7	4.4
	-5.0	-5.6	5.0	5.0	5.0	4.8	4.7	4.4
	-3.0	-3.7	5.3	5.1	5.0	4.8	4.7	4.4
	0.0	-0.7	5.3	5.2	5.0	4.8	4.7	4.4
	3.0	2.2	5.5	5.3	5.0	4.8	4.7	4.4
	5.0	4.1	5.6	5.3	5.0	4.8	4.7	4.4
	7.0	6.0	5.6	5.3	5.0	4.8	4.7	4.4
	9.0	7.9	5.6	5.3	5.0	4.8	4.7	4.4
	11.0	9.8	5.6	5.3	5.0	4.8	4.7	4.4
	13.0	11.8	5.6	5.3	5.0	4.8	4.7	4.4
	15.0	13.7	5.6	5.3	5.0	4.8	4.7	4.4
5.6	-24.8	-25.0	3.6	3.6	3.6	3.6	3.6	3.6
	-21.8	-22.0	4.4	4.4	4.4	4.4	4.4	4.4
	-19.8	-20.0	4.6	4.6	4.6	4.6	4.6	4.6
	-18.8	-19.0	4.8	4.7	4.7	4.7	4.7	4.7
	-16.7	-17.0	5.0	5.0	5.0	4.9	4.9	4.9
	-14.7	-15.0	5.2	5.2	5.2	5.2	5.2	5.2
	-12.6	-13.0	5.5	5.4	5.4	5.4	5.4	5.4
	-10.5	-11.0	5.7	5.7	5.7	5.7	5.7	5.5
	-9.5	-10.0	5.8	5.8	5.8	5.8	5.8	5.5
	-8.5	-9.1	5.9	5.9	5.9	5.9	5.9	5.5
	-7.0	-7.6	6.1	6.1	6.1	6.0	5.9	5.5
	-5.0	-5.6	6.3	6.3	6.3	6.1	5.9	5.5
	-3.0	-3.7	6.6	6.5	6.3	6.1	5.9	5.5
	0.0	-0.7	6.7	6.5	6.3	6.1	5.9	5.5
	3.0	2.2	6.9	6.7	6.3	6.1	5.9	5.5
	5.0	4.1	7.0	6.7	6.3	6.1	5.9	5.5
	7.0	6.0	7.1	6.7	6.3	6.1	5.9	5.5
	9.0	7.9	7.1	6.7	6.3	6.1	5.9	5.5
	11.0	9.8	7.1	6.7	6.3	6.1	5.9	5.5
	13.0	11.8	7.1	6.7	6.3	6.1	5.9	5.5
	15.0	13.7	7.1	6.7	6.3	6.1	5.9	5.5
7.1	-24.8	-25.0	4.6	4.6	4.6	4.6	4.6	4.6
	-21.8	-22.0	5.6	5.6	5.6	5.6	5.6	5.5
	-19.8	-20.0	5.9	5.9	5.9	5.9	5.9	5.8
	-18.8	-19.0	6.0	6.0	6.0	6.0	6.0	6.0
	-16.7	-17.0	6.3	6.3	6.3	6.3	6.3	6.3
	-14.7	-15.0	6.6	6.6	6.6	6.6	6.6	6.6
	-12.6	-13.0	6.9	6.9	6.9	6.9	6.9	6.9
	-10.5	-11.0	7.2	7.2	7.2	7.2	7.2	7.0
	-9.5	-10.0	7.4	7.4	7.3	7.3	7.3	7.0
	-8.5	-9.1	7.5	7.5	7.5	7.5	7.5	7.0
	-7.0	-7.6	7.7	7.7	7.7	7.7	7.5	7.0
	-5.0	-5.6	8.0	8.0	8.0	7.7	7.5	7.0
	-3.0	-3.7	8.4	8.2	8.0	7.7	7.5	7.0
	0.0	-0.7	8.6	8.3	8.0	7.7	7.5	7.0
	3.0	2.2	8.8	8.5	8.0	7.7	7.5	7.0
	5.0	4.1	8.9	8.5	8.0	7.7	7.5	7.0
	7.0	6.0	9.0	8.5	8.0	7.7	7.5	7.0
	9.0	7.9	9.0	8.5	8.0	7.7	7.5	7.0
	11.0	9.8	9.0	8.5	8.0	7.7	7.5	7.0
	13.0	11.8	9.0	8.5	8.0	7.7	7.5	7.0
	15.0	13.7	9.0	8.5	8.0	7.7	7.5	7.0

Notes:

TC: Total Capacity(kW)

1. Capacity tables show the representative value of conditions which may occur.
2. is shown as reference. When selecting the outdoor units, avoid the outdoor air temperature range shown by .
3. In accordance with operation limits of outdoor unit, applicable range of capacity tables is different.
4. Refer to Capacity Correction Factor in the outdoor unit PDB for the actual performance data of each indoor unit and outdoor unit combination.

6. Capacity Tables

Heating capacity

Capacity Index	Outdoor air temp.		Indoor air temp. (DB, °C)					
			16	18	20	21	22	24
	DB(°C)	WB(°C)	TC	TC	TC	TC	TC	TC
			kW	kW	kW	kW	kW	kW
8.2	-24.8	-25.0	5.3	5.3	5.3	5.3	5.3	5.3
	-21.8	-22.0	6.4	6.4	6.4	6.4	6.4	6.4
	-19.8	-20.0	6.8	6.8	6.7	6.7	6.7	6.7
	-18.8	-19.0	6.9	6.9	6.9	6.9	6.9	6.9
	-16.7	-17.0	7.2	6.9	7.2	7.2	7.2	7.2
	-14.7	-15.0	7.6	6.9	7.6	7.6	7.6	7.5
	-12.6	-13.0	8.0	6.9	7.9	7.9	7.9	7.9
	-10.5	-11.0	8.3	6.9	8.3	8.3	8.3	8.0
	-9.5	-10.0	8.5	6.9	8.4	8.4	8.4	8.0
	-8.5	-9.1	8.6	6.9	8.6	8.6	8.6	8.0
	-7.0	-7.6	8.9	6.9	8.9	8.8	8.6	8.0
	-5.0	-5.6	9.2	6.9	9.2	8.9	8.6	8.0
	-3.0	-3.7	9.7	6.9	9.2	8.9	8.6	8.0
	0.0	-0.7	9.8	6.9	9.2	8.9	8.6	8.0
	3.0	2.2	10.1	6.9	9.2	8.9	8.6	8.0
	5.0	4.1	10.3	6.9	9.2	8.9	8.6	8.0
	7.0	6.0	10.4	6.9	9.2	8.9	8.6	8.0
	9.0	7.9	10.4	6.9	9.2	8.9	8.6	8.0
	11.0	9.8	10.4	6.9	9.2	8.9	8.6	8.0
	13.0	11.8	10.4	6.9	9.2	8.9	8.6	8.0
	15.0	13.7	10.4	6.9	9.2	8.9	8.6	8.0
10.6	-24.8	-25.0	6.9	6.9	6.8	6.8	6.8	6.8
	-21.8	-22.0	8.3	8.3	8.3	8.3	8.3	8.2
	-19.8	-20.0	8.8	8.8	8.7	8.7	8.7	8.6
	-18.8	-19.0	9.0	8.9	8.9	8.9	8.9	8.9
	-16.7	-17.0	9.4	9.4	9.4	9.3	9.3	9.3
	-14.7	-15.0	9.9	9.9	9.8	9.8	9.8	9.8
	-12.6	-13.0	10.3	10.3	10.3	10.3	10.2	10.2
	-10.5	-11.0	10.8	10.8	10.7	10.7	10.7	10.4
	-9.5	-10.0	11.0	11.0	10.9	10.9	10.9	10.4
	-8.5	-9.1	11.2	11.2	11.1	11.1	11.1	10.4
	-7.0	-7.6	11.5	11.5	11.5	11.4	11.1	10.4
	-5.0	-5.6	12.0	11.9	11.9	11.5	11.1	10.4
	-3.0	-3.7	12.5	12.2	11.9	11.5	11.1	10.4
	0.0	-0.7	12.7	12.3	11.9	11.5	11.1	10.4
	3.0	2.2	13.1	12.7	11.9	11.5	11.1	10.4
	5.0	4.1	13.3	12.7	11.9	11.5	11.1	10.4
	7.0	6.0	13.4	12.7	11.9	11.5	11.1	10.4
	9.0	7.9	13.4	12.7	11.9	11.5	11.1	10.4
	11.0	9.8	13.4	12.7	11.9	11.5	11.1	10.4
	13.0	11.8	13.4	12.7	11.9	11.5	11.1	10.4
	15.0	13.7	13.4	12.7	11.9	11.5	11.1	10.4
12.3	-24.8	-25.0	8.0	8.0	7.9	7.9	7.9	7.9
	-21.8	-22.0	9.7	9.7	9.6	9.6	9.6	9.5
	-19.8	-20.0	10.2	10.2	10.1	10.1	10.1	10.0
	-18.8	-19.0	10.4	10.3	10.3	10.3	10.3	10.3
	-16.7	-17.0	10.9	10.9	10.9	10.8	10.8	10.8
	-14.7	-15.0	11.4	11.4	11.4	11.4	11.4	11.3
	-12.6	-13.0	12.0	11.9	11.9	11.9	11.8	11.8
	-10.5	-11.0	12.5	12.5	12.4	12.4	12.4	12.0
	-9.5	-10.0	12.7	12.7	12.7	12.7	12.7	12.0
	-8.5	-9.1	13.0	13.0	12.9	12.9	12.9	12.0
	-7.0	-7.6	13.3	13.3	13.3	13.2	12.9	12.0
	-5.0	-5.6	13.9	13.8	13.8	13.4	12.9	12.0
	-3.0	-3.7	14.5	14.2	13.8	13.4	12.9	12.0
	0.0	-0.7	14.8	14.3	13.8	13.4	12.9	12.0
	3.0	2.2	15.2	14.7	13.8	13.4	12.9	12.0
	5.0	4.1	15.4	14.7	13.8	13.4	12.9	12.0
	7.0	6.0	15.6	14.7	13.8	13.4	12.9	12.0
	9.0	7.9	15.6	14.7	13.8	13.4	12.9	12.0
	11.0	9.8	15.6	14.7	13.8	13.4	12.9	12.0
	13.0	11.8	15.6	14.7	13.8	13.4	12.9	12.0
	15.0	13.7	15.6	14.7	13.8	13.4	12.9	12.0

Notes:

TC: Total Capacity(kW)

1. Capacity tables show the representative value of conditions which may occur.
2. is shown as reference. When selecting the outdoor units, avoid the outdoor air temperature range shown by .
3. In accordance with operation limits of outdoor unit, applicable range of capacity tables is different.
4. Refer to Capacity Correction Factor in the outdoor unit PDB for the actual performance data of each indoor unit and outdoor unit combination.

6. Capacity Tables

Heating capacity

Capacity Index	Outdoor air temp.		Indoor air temp. (DB, °C)					
			16	18	20	21	22	24
	DB(°C)	WB(°C)	TC	TC	TC	TC	TC	TC
			kW	kW	kW	kW	kW	kW
14.1	-24.8	-25.0	9.2	9.2	9.1	9.1	9.1	9.1
	-21.8	-22.0	11.1	11.1	11.1	11.1	11.1	11.0
	-19.8	-20.0	11.7	11.7	11.6	11.6	11.6	11.6
	-18.8	-19.0	12.0	11.9	11.9	11.9	11.9	11.9
	-16.7	-17.0	12.5	12.5	12.5	12.4	12.4	12.4
	-14.7	-15.0	13.2	13.2	13.1	13.1	13.1	13.0
	-12.6	-13.0	13.8	13.7	13.7	13.7	13.6	13.6
	-10.5	-11.0	14.4	14.4	14.3	14.3	14.3	13.9
	-9.5	-10.0	14.7	14.7	14.6	14.6	14.6	13.9
	-8.5	-9.1	14.9	14.9	14.9	14.9	14.9	13.9
	-7.0	-7.6	15.4	15.3	15.3	15.2	14.9	13.9
	-5.0	-5.6	16.0	15.9	15.9	15.4	14.9	13.9
	-3.0	-3.7	16.7	16.3	15.9	15.4	14.9	13.9
	0.0	-0.7	17.0	16.5	15.9	15.4	14.9	13.9
	3.0	2.2	17.5	16.9	15.9	15.4	14.9	13.9
	5.0	4.1	17.7	16.9	15.9	15.4	14.9	13.9
	7.0	6.0	17.9	16.9	15.9	15.4	14.9	13.9
	9.0	7.9	17.9	16.9	15.9	15.4	14.9	13.9
	11.0	9.8	17.9	16.9	15.9	15.4	14.9	13.9
	13.0	11.8	17.9	16.9	15.9	15.4	14.9	13.9
	15.0	13.7	17.9	16.9	15.9	15.4	14.9	13.9
15.8	-24.8	-25.0	10.4	10.4	10.4	10.4	10.4	10.3
	-21.8	-22.0	12.6	12.6	12.5	12.5	12.5	12.4
	-19.8	-20.0	13.2	13.2	13.2	13.2	13.2	13.1
	-18.8	-19.0	13.6	13.5	13.5	13.5	13.4	13.4
	-16.7	-17.0	14.2	14.2	14.2	14.1	14.1	14.1
	-14.7	-15.0	14.9	14.9	14.8	14.8	14.8	14.8
	-12.6	-13.0	15.6	15.5	15.5	15.5	15.4	15.4
	-10.5	-11.0	16.3	16.3	16.2	16.2	16.2	15.7
	-9.5	-10.0	16.6	16.6	16.5	16.5	16.5	15.7
	-8.5	-9.1	16.9	16.9	16.8	16.8	16.8	15.7
	-7.0	-7.6	17.4	17.3	17.3	17.3	16.8	15.7
	-5.0	-5.6	18.1	18.0	18.0	17.4	16.8	15.7
	-3.0	-3.7	18.9	18.5	18.0	17.4	16.8	15.7
	0.0	-0.7	19.3	18.6	18.0	17.4	16.8	15.7
	3.0	2.2	19.8	19.2	18.0	17.4	16.8	15.7
	5.0	4.1	20.1	19.2	18.0	17.4	16.8	15.7
	7.0	6.0	20.3	19.2	18.0	17.4	16.8	15.7
	9.0	7.9	20.3	19.2	18.0	17.4	16.8	15.7
	11.0	9.8	20.3	19.2	18.0	17.4	16.8	15.7
	13.0	11.8	20.3	19.2	18.0	17.4	16.8	15.7
	15.0	13.7	20.3	19.2	18.0	17.4	16.8	15.7

Notes:
TC: Total Capacity(kW)
1. Capacity tables show the representative value of conditions which may occur.
2. is shown as reference. When selecting the outdoor units, avoid the outdoor air temperature range shown by .
3. In accordance with operation limits of outdoor unit, applicable range of capacity tables is different.
4. Refer to Capacity Correction Factor in the outdoor unit PDB for the actual performance data of each indoor unit and outdoor unit combination.

7. External Static Pressure (E.S.P) & Air Flow

ARNU07GM1A4, ARNU09GM1A4, ARNU12GM1A4 ARNU15GM1A4, ARNU18GM1A4

(Unit: CMM)

Setting value	Static Pressure (mmAq(Pa))							
	2.5(25)	4(39)	6(59)	8(78)	10(98)	12(118)	14(137)	15(147)
60	6.3							
65	8.5							
70	11.3	7.8						
75	12.8	9.6	6.6					
80	14.4	11.4	8.4					
85	15.9	13.2	10.2					
90	17.5	15.0	12.0	8.9				
95	19.0	16.7	13.7	10.7				
100	20.6	18.5	15.5	12.5	9.1			
105	22.1	20.3	17.3	14.3	11.1	7.8		
110	23.7	22.1	19.0	16.1	13.1	10.0		
115		23.8	20.8	17.9	15.1	12.2	9.0	
120			22.6	19.7	17.1	14.3	11.3	9.5
125				21.5	19.1	16.5	13.6	11.9
130				23.3	21.2	18.7	15.8	14.3
135					23.2	20.8	18.0	16.7
140						23.0	20.3	19.1
145							22.5	21.5
150								23.8

Note: 1. The above table shows the correlation between the air rates and E.S.P.
2. The above table shows the available E.S.P. range.
3. If the E.S.P. of the installed indoor is less than the lowest value(as mention in the table), indoor components can be failed.

Fan Performance

ARNU07GM1A4, ARNU09GM1A4, ARNU12GM1A4 ARNU15GM1A4, ARNU18GM1A4

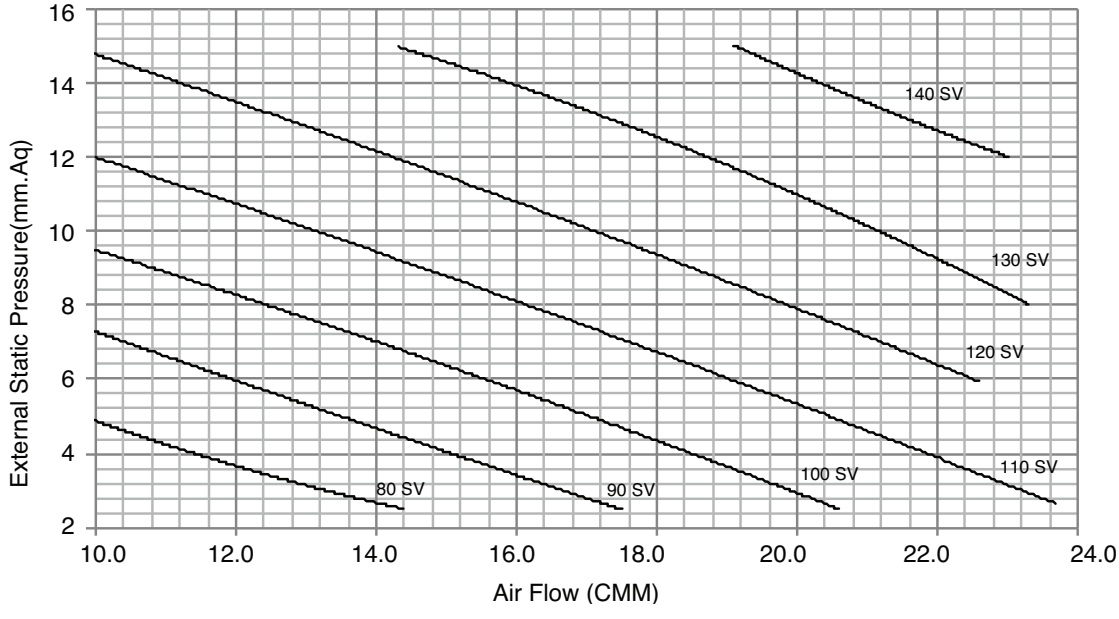

7. External Static Pressure (E.S.P) & Air Flow

ARNU24GM1A4

(Unit: CMM)

Setting value	Static Pressure (mmAq(Pa))							
	2.5(25)	4(39)	6(59)	8(78)	10(98)	12(118)	14(137)	15(147)
85	16.8	14.6	-	-	-	-	-	-
90	18.1	15.9	-	-	-	-	-	-
95	19.4	17.2	15.0	-	-	-	-	-
100	20.7	18.5	16.3	13.9	-	-	-	-
105	22.0	19.8	17.7	15.3	13.0	-	-	-
110	23.3	21.1	19.1	16.8	14.6	-	-	-
115	24.6	22.4	20.5	18.3	16.3	14.2	-	-
120	25.9	23.7	21.8	19.7	17.9	15.9	13.3	-
125	-	25.1	23.2	21.2	19.6	17.5	15.2	14.6
130	-	-	24.6	22.7	21.2	19.2	17.1	16.3
135	-	-	-	24.2	22.9	20.9	19.0	18.1
140	-	-	-	-	24.5	22.6	20.9	19.9

Note: 1. The above table shows the correlation between the air rates and E.S.P.
2. The above table shows the available E.S.P. range.
3. If the E.S.P. of the installed indoor is less than the lowest value(as mention in the table), indoor components can be failed.

Fan Performance

ARNU24GM1A4

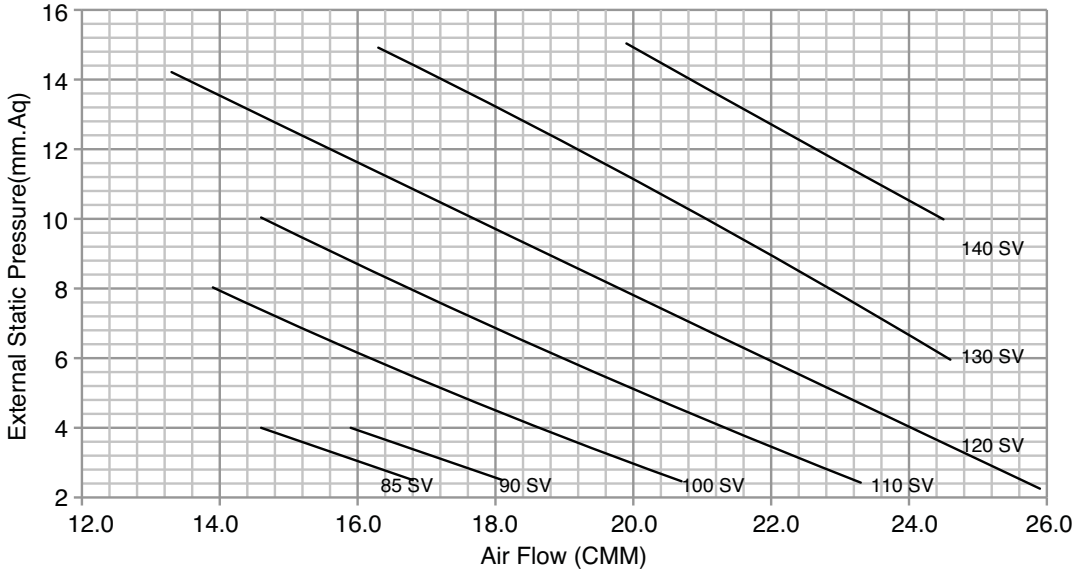

7. External Static Pressure (E.S.P) & Air Flow

ARNU28GM2A4, ARNU36GM2A4

(Unit: CMM)

Setting value	Static Pressure (mmAq(Pa))						
	4(39)	6(59)	8(78)	10(98)	12(118)	14(137)	15(147)
85	24.9	-	-	-	-	-	-
90	27.6	22.7	-	-	-	-	-
95	30.4	25.7	20.7	-	-	-	-
100	33.1	28.7	24.0	-	-	-	-
105	35.9	31.7	27.3	20.8	-	-	-
110	38.6	34.7	30.5	24.3	20.6	-	-
115	-	37.8	33.8	27.9	23.8	-	-
120	-	-	37.1	31.4	27.0	22.4	20.5
125	-	-	-	35.0	30.1	25.7	23.7
130	-	-	-	37.1	32.0	27.6	25.7

Note: 1. The above table shows the correlation between the air rates and E.S.P.
2. The above table shows the available E.S.P. range.
3. If the E.S.P. of the installed indoor is less than the lowest value(as mention in the table), indoor components can be failed.

Fan Performance

ARNU28GM2A4, ARNU36GM2A4

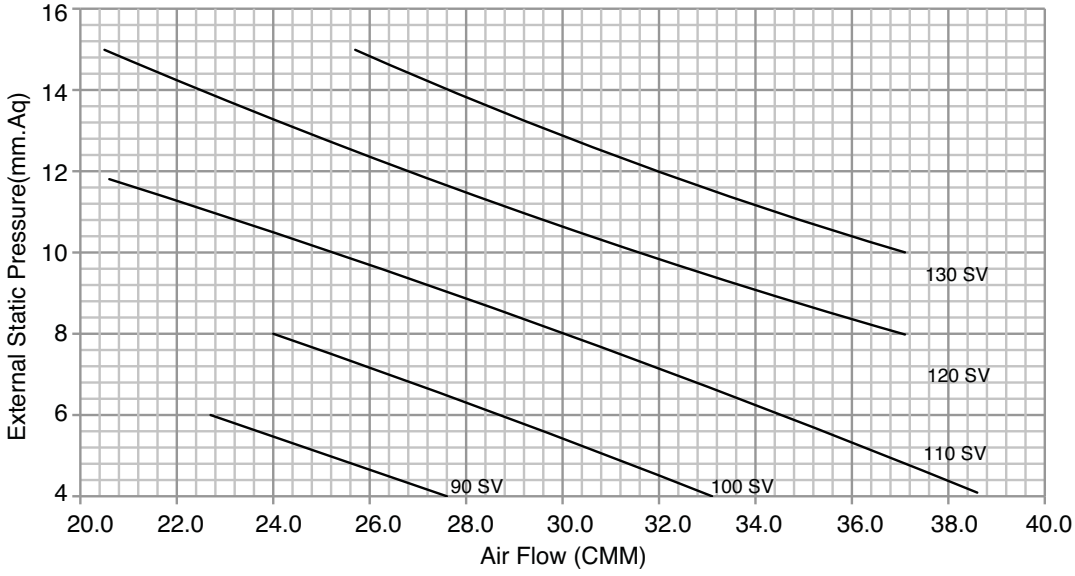

7. External Static Pressure (E.S.P) & Air Flow

ARNU42GM2A4

(Unit: CMM)

Setting value	Static Pressure (mmAq(Pa))						
	5(49)	6(59)	8(78)	10(98)	12(118)	14(137)	15(147)
90	22.2	-	-	-	-	-	-
95	25.1	22.3	-	-	-	-	-
100	28.0	25.4	-	-	-	-	-
105	30.9	28.5	23.3	-	-	-	-
110	33.8	31.6	26.8	-	-	-	-
115	36.7	34.8	30.3	24.4	-	-	-
120	39.7	37.9	33.8	28.3	23.5	-	-
125	42.6	41.0	37.3	32.2	27.5	-	-
130	-	44.1	40.8	36.1	31.6	26.1	-
135	-	-	44.3	40.0	35.6	30.4	28.0
140	-	-	-	43.9	39.7	34.6	32.4
145	-	-	-	-	43.7	38.9	36.8
150	-	-	-	-	-	43.1	41.2
155	-	-	-	-	-	-	45.6

Note: 1. The above table shows the correlation between the air rates and E.S.P.
2. The above table shows the available E.S.P. range.
3. If the E.S.P. of the installed indoor is less than the lowest value(as mention in the table), indoor components can be failed.

Fan Performance

ARNU42GM1A4

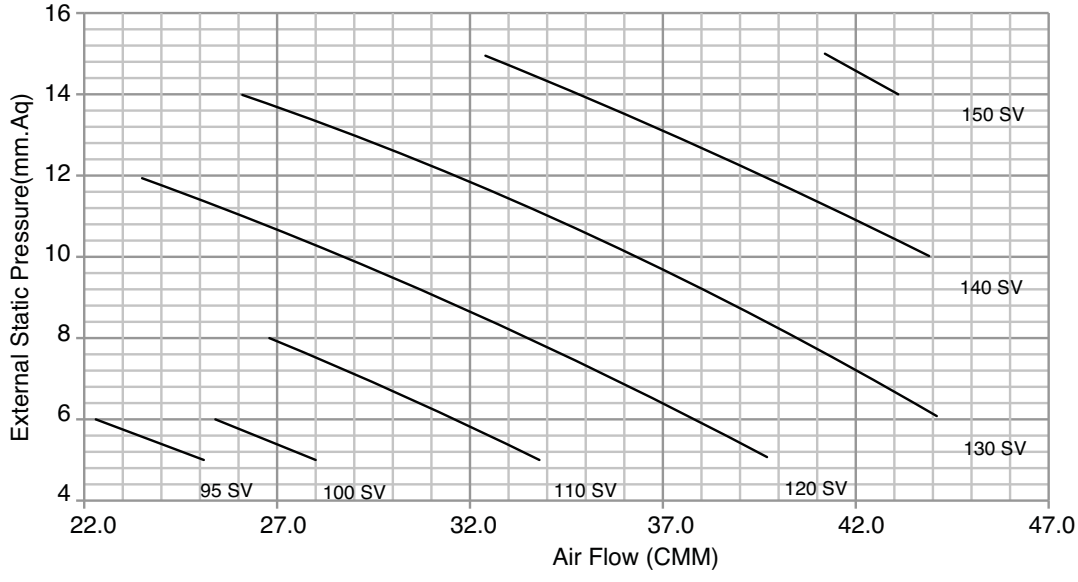

7. External Static Pressure (E.S.P) & Air Flow

ARNU48GM3A4, ARNU54GM3A4

(Unit: CMM)

Setting value	Static Pressure (mmAq(Pa))						
	5(49)	6(59)	8(78)	10(98)	12(118)	14(137)	15(147)
70	25.1	-	-	-	-	-	-
75	29.5	26.1	-	-	-	-	-
80	34.0	30.8	25.9	-	-	-	-
85	38.4	35.4	30.6	32.2	-	-	-
90	42.9	40.1	35.2	28.1	21.0	-	-
95	47.3	44.8	39.9	33.1	26.3	19.5	-
100	51.8	49.4	44.6	38.0	31.7	25.2	22.6
105	56.2	54.1	49.2	43.0	37.1	31.0	28.5
110	-	58.8	53.9	47.9	42.4	36.7	34.4
115	-	-	58.6	52.9	47.8	42.5	40.3
120	-	-	-	57.8	53.1	48.2	46.1
125	-	-	-	-	54.2	49.4	47.3

Note: 1. The above table shows the correlation between the air rates and E.S.P.
2. The above table shows the available E.S.P. range.
3. If the E.S.P. of the installed indoor is less than the lowest value(as mention in the table), indoor components can be failed.

Fan Performance

ARNU48GM3A4, ARNU54GM3A4

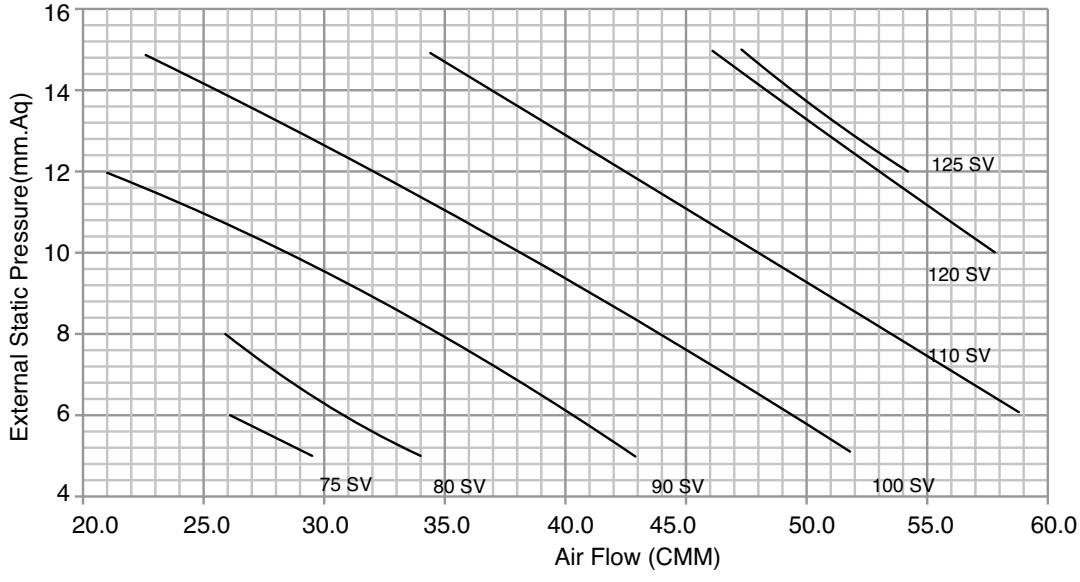

7. External Static Pressure (E.S.P) & Air Flow

ARNU07GM1A4, ARNU09GM1A4, ARNU12GM1A4, ARNU15GM1A4, ARNU18GM1A4, ARNU24GM1A4, ARNU28GM2A4, ARNU36GM2A4 ARNU42GM2A4, ARNU48GM3A4, ARNU54GM3A4

Capacity	Mode		Set Value	Standard ESP(mmAq(Pa))	CMM	Lower Limit of External Static Pressure(mmAq(Pa))	Upper Limit of External Static Pressure(mmAq(Pa))
7k	High (factory set)	Hi	84	6(59)	9.0	2(20)	15(147)
		Mid	79		7.5		
		Low	75		6.0		
	Standard	Hi	69	2.5(25)	9.0	2(20)	15(147)
		Mid	65		7.5		
		Low	61		6.0		
9k	High (factory set)	Hi	85	6(59)	9.5	2(20)	15(147)
		Mid	80		7.5		
		Low	76		6.0		
	Standard	Hi	70	2.5(25)	9.5	2(20)	15(147)
		Mid	66		7.5		
		Low	62		6.0		
12k	High (factory set)	Hi	86	6(59)	11.0	2(20)	15(147)
		Mid	82		9.0		
		Low	78		7.0		
	Standard	Hi	71	2.5(25)	11.0	2(20)	15(147)
		Mid	67		9.0		
		Low	63		7.0		
15k	High (factory set)	Hi	98	6(59)	16.0	2(20)	15(147)
		Mid	86		12.0		
		Low	82		9.0		
	Standard	Hi	86	2.5(25)	16.0	2(20)	15(147)
		Mid	72		12.0		
		Low	67		9.0		
18k	High (factory set)	Hi	103	6(59)	17.0	2(20)	15(147)
		Mid	97		14.5		
		Low	86		12.0		
	Standard	Hi	87	2.5(25)	17.0	2(20)	15(147)
		Mid	78		14.5		
		Low	72		12.0		
24k	High (factory set)	Hi	108	6(59)	19.0	2(20)	15(147)
		Mid	103		16.0		
		Low	97		14.0		
	Standard	Hi	92	2.5(25)	19.0	2(20)	15(147)
		Mid	87		16.0		
		Low	77		14.0		
28k	High (factory set)	Hi	101	6(59)	28.0	4(39)	15(147)
		Mid	95		24.0		
		Low	90		21.0		
	Standard	Hi	99	5(49)	28.0	4(39)	15(147)
		Mid	94		24.0		
		Low	89		21.0		
36k	High (factory set)	Hi	109	6(59)	32.0	4(39)	15(147)
		Mid	101		28.0		
		Low	95		24.0		
	Standard	Hi	105	5(49)	32.0	4(39)	15(147)
		Mid	97		28.0		
		Low	91		24.0		
42k	High (factory set)	Hi	120	6(59)	38.0	5(49)	15(147)
		Mid	111		33.0		
		Low	103		28.0		
	Standard	Hi	117	5(49)	38.0	5(49)	15(147)
		Mid	108		33.0		
		Low	100		28.0		
48k	High (factory set)	Hi	92	6(59)	40.0	4(39)	15(147)
		Mid	84		34.0		
		Low	79		28.0		
	Standard	Hi	89	5(49)	40.0	4(39)	15(147)
		Mid	82		34.0		
		Low	76		28.0		
54k	High (factory set)	Hi	100	6(59)	50.0	4(39)	15(147)
		Mid	96		45.0		
		Low	92		40.0		
	Standard	Hi	97	5(49)	50.0	4(39)	15(147)
		Mid	92		45.0		
		Low	88		40.0		

8. Electric Characteristics

Units					Power Supply		IFM		Input(W)	
Model	Type	Hz	Volts	Voltage Range	MCA	MFA	kW	FLA	Cooling	Heating
ARNU07GM1A4	M1	50	220-240	Max:264 Min:198	2.00	15	0.136	1.60	190	190
ARNU09GM1A4	M1				2.00	15	0.136	1.60	190	190
ARNU12GM1A4	M1				2.00	15	0.136	1.60	190	190
ARNU15GM1A4	M1				2.00	15	0.136	1.60	190	190
ARNU18GM1A4	M1				2.00	15	0.136	1.60	190	190
ARNU24GM1A4	M1				2.00	15	0.136	1.60	190	190
ARNU28GM2A4	M2				2.90	15	0.350	2.30	350	350
ARNU36GM2A4	M2				2.90	15	0.350	2.30	350	350
ARNU42GM2A4	M2				2.90	15	0.350	2.30	350	350
ARNU48GM3A4	M3				3.10	15	0.350	2.50	400	400
ARNU54GM3A4	M3				3.10	15	0.350	2.50	400	400
ARNU07GM1A4	M1	60	220	Max:242 Min:198	2.00	15	0.136	1.60	190	190
ARNU09GM1A4	M1				2.00	15	0.136	1.60	190	190
ARNU12GM1A4	M1				2.00	15	0.136	1.60	190	190
ARNU15GM1A4	M1				2.00	15	0.136	1.60	190	190
ARNU18GM1A4	M1				2.00	15	0.136	1.60	190	190
ARNU24GM1A4	M1				2.00	15	0.136	1.60	190	190
ARNU28GM2A4	M2				2.90	15	0.35	2.30	350	350
ARNU36GM2A4	M2				2.90	15	0.350	2.30	350	350
ARNU42GM2A4	M2				2.90	15	0.350	2.30	350	350
ARNU48GM3A4	M3				3.10	15	0.350	2.50	400	400
ARNU54GM3A4	M3				3.10	15	0.350	2.50	400	400

Symbols:

MCA : Min, Circuit Amps(A)
MFA : Max. Fuse Amps(see note 5)
kW : Fan Motor Rated Output(kW)
FLA : Full Load Amps(A)
IFM : Indoor Fan Motor

Note :

1. Voltage range
   Units are suitable for use on electrical systems where voltage supplied to unit terminals is not below or above the listed range limits,
2. Maximum allowable voltage unbalance between phases is 2%
3. MCA/MFA
   MCA=1.25 x FLA
   MFA≤ 4 x FLA
   (Next lower standard fuse rating. Min. 15A)
4. Select wire size based on the MCA
5. Instead of fuse, use Circuit Breaker.

9. Sound Levels

9.1 Sound Pressure Levels

Overall

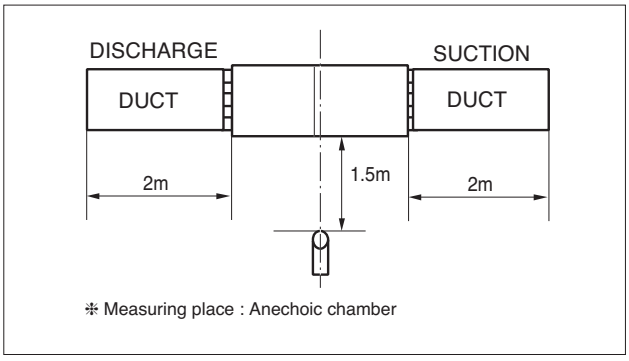

Notes:
1. Sound measured at 1.5m away from the center of the unit
2. Operating condition
   - Power source : 220-240V 50Hz / 220V 60Hz
   - Cooling : Indoor temperature (27°C DB, 19°C WB), Outdoor temperature (35°C DB, 24°C WB)
   - Heating : Indoor temperature (20°C DB, 15°C WB), Outdoor temperature (7°C DB, 6°C WB)
3. Reference accoustic pressure 0dB = 20μPa
4. Sound level will vary depending on a range of factors such as the construction(acoustic absorption coefficient) of particular room in which the equipment in installed.

Model	Sound Pressure Levels (dB(A),H-M-L)			
	External Static Pressure (Pa)			
	20	25	59	147
ARNU07GM1A4	26-24-23	26-24-23	27-24-23	33-28-25
ARNU09GM1A4	27-25-23	27-25-23	27-25-23	33-29-26
ARNU12GM1A4	27-25-23	27-25-23	28-25-23	33-30-27
ARNU15GM1A4	30-27-23	30-27-23	30-27-24	37-33-30
ARNU18GM1A4	31-28-25	31-28-25	32-29-27	37-34-29
ARNU24GM1A4	32-29-26	32-29-26	33-30-28	38-35-32

Sound Pressure Level (20Pa)

ARNU07GM1A4

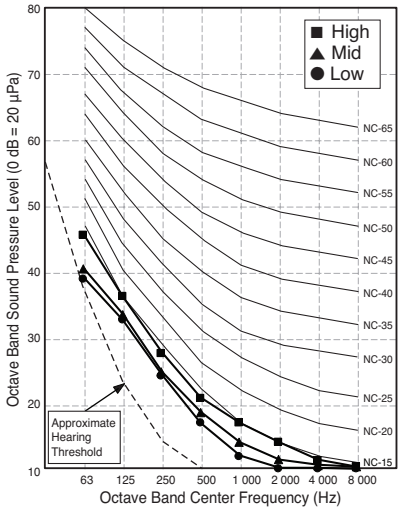

ARNU09GM1A4

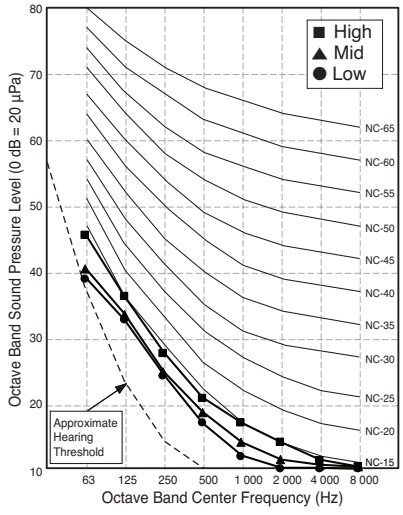

ARNU12GM1A4

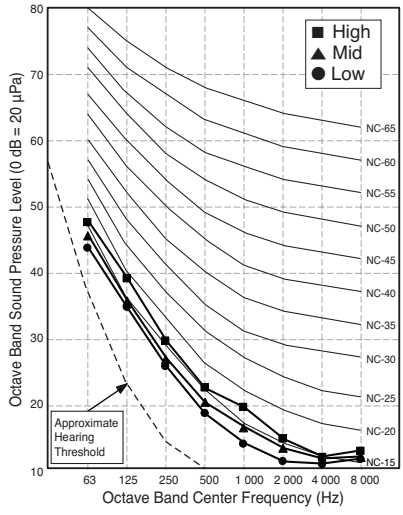

9. Sound Levels

ARNU15GM1A4

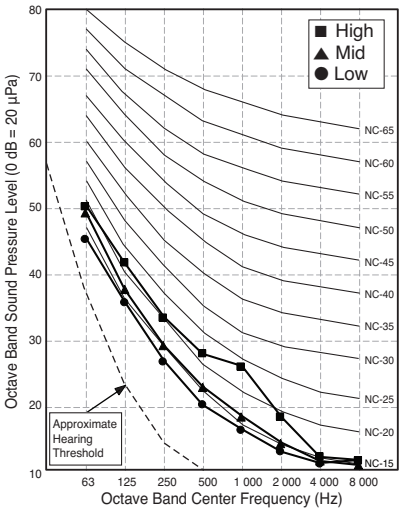

ARNU18GM1A4

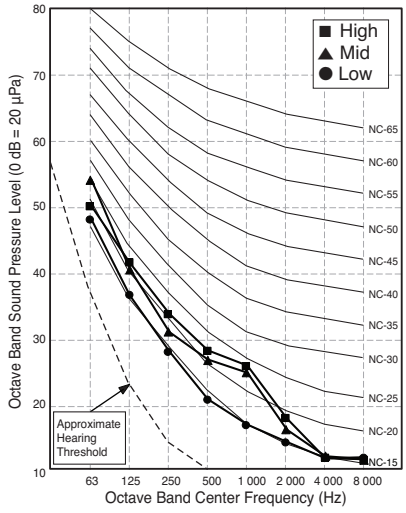

ARNU24GM1A4

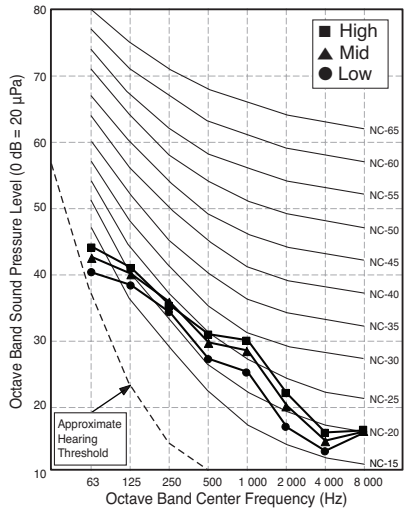

Sound Pressure Level (25Pa)

ARNU07GM1A4

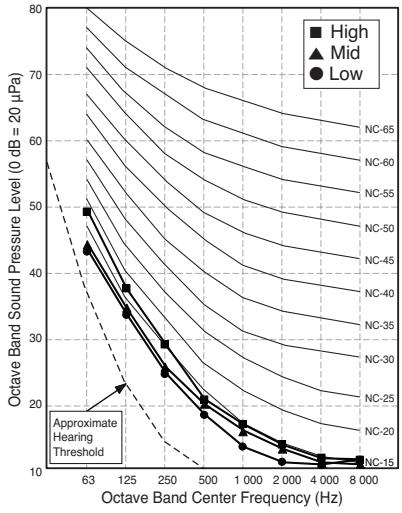

ARNU09GM1A4

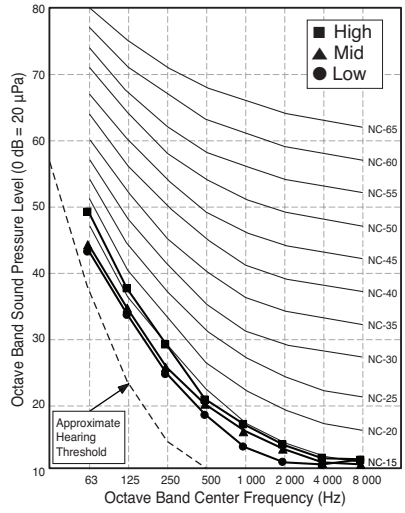

ARNU12GM1A4

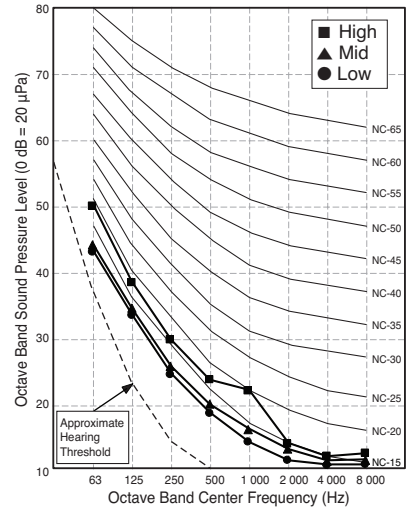

ARNU15GM1A4

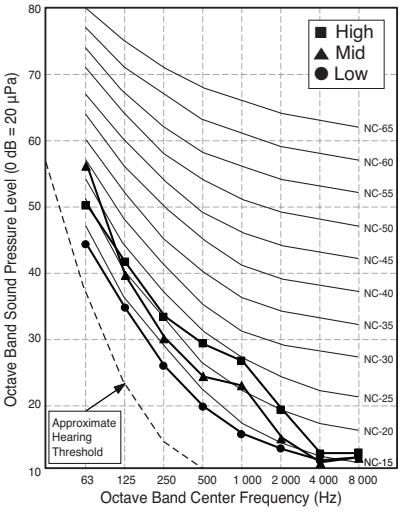

ARNU18GM1A4

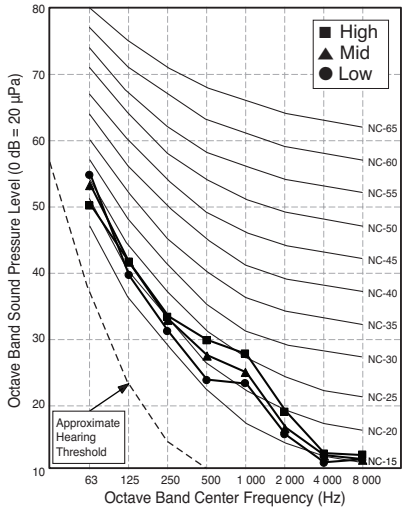

ARNU24GM1A4

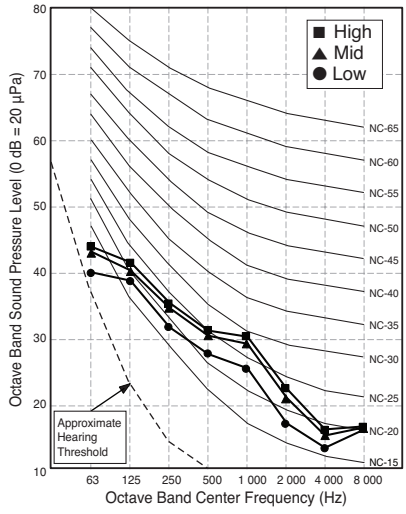

9. Sound Levels

Sound Pressure Level (59Pa)

ARNU07GM1A4

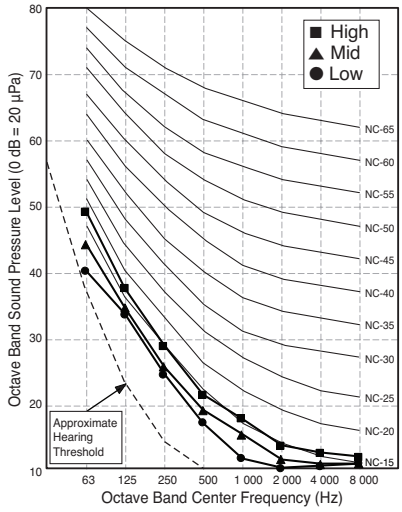

ARNU09GM1A4

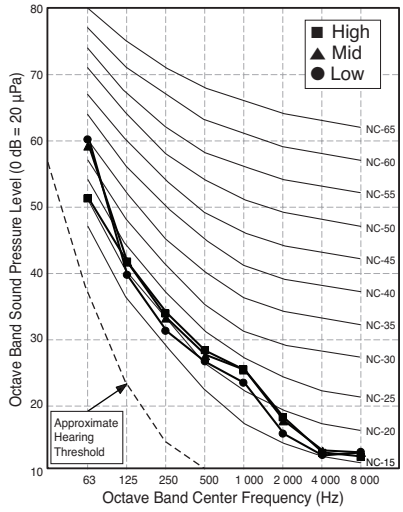

ARNU12GM1A4

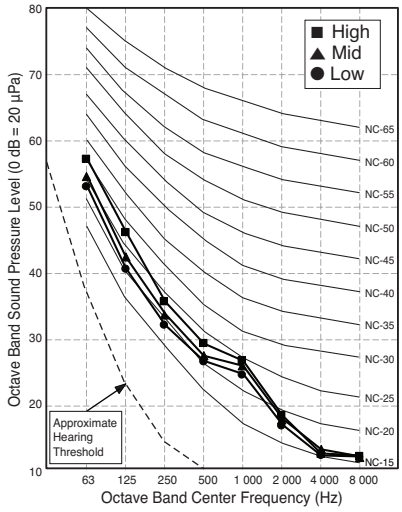

ARNU15GM1A4

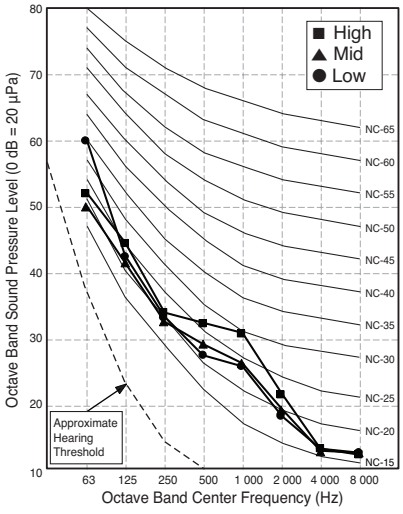

ARNU18GM1A4

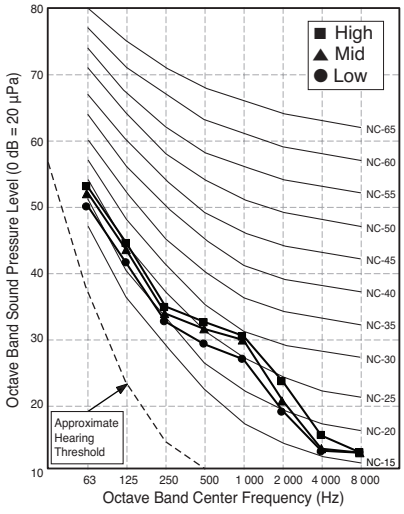

ARNU24GM1A4

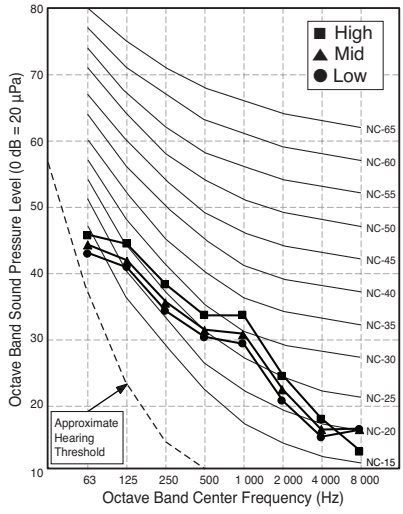

Sound Pressure Level (147Pa)

ARNU07GM1A4

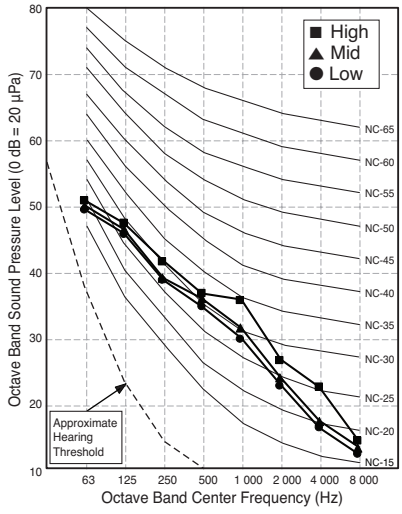

ARNU09GM1A4

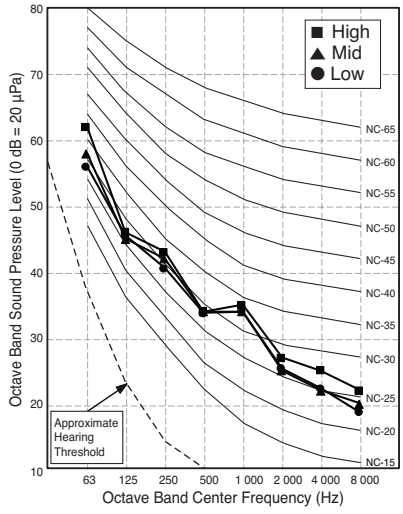

ARNU12GM1A4

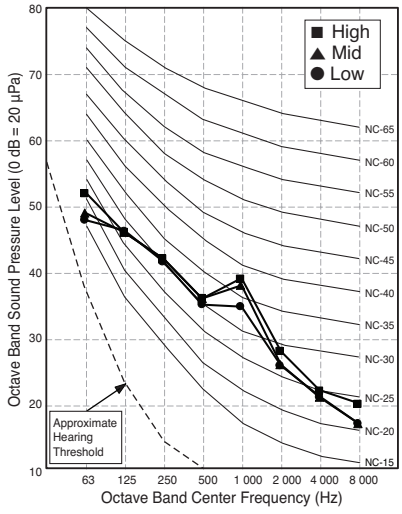

9. Sound Levels

ARNU15GM1A4

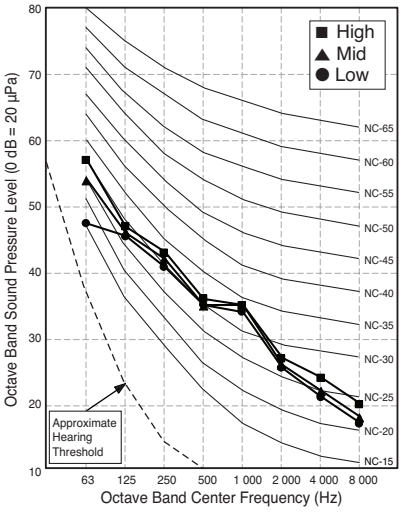

ARNU18GM1A4

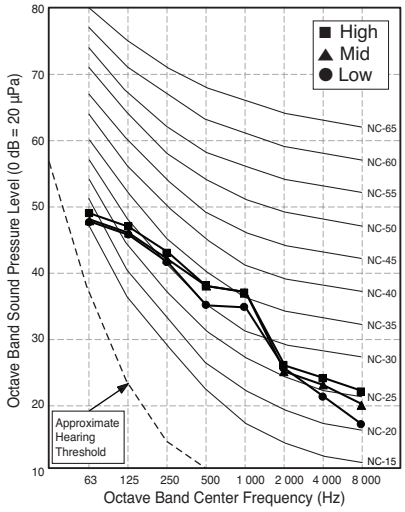

ARNU24GM1A4

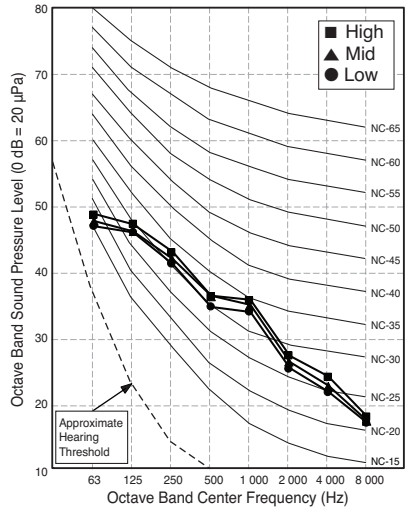

9. Sound Levels

Model	Sound Pressure Levels (dB(A),H-M-L)			
	External Static Pressure (Pa)			
	39	49	59	147
ARNU28GM2A4	36-34-33	36-34-33	36-34-33	40-39-38
ARNU36GM2A4	36-34-33	37-36-34	37-36-34	42-40-39
ARNU42GM2A4	-	38-37-36	38-37-36	44-43-42
ARNU48GM3A4	39-37-35	39-37-35	40-38-36	43-42-41
ARNU54GM3A4	42-40-39	42-40-39	41-41-40	45-44-43

Sound Pressure Level (39Pa)

ARNU28GM2A4

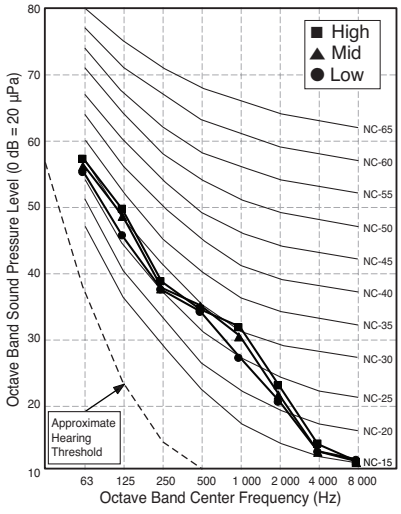

ARNU36GM2A4

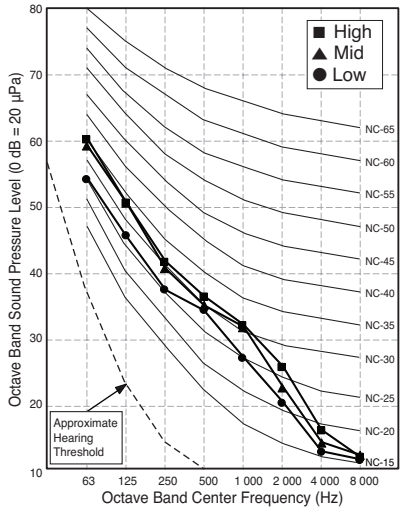

ARNU48GM3A4

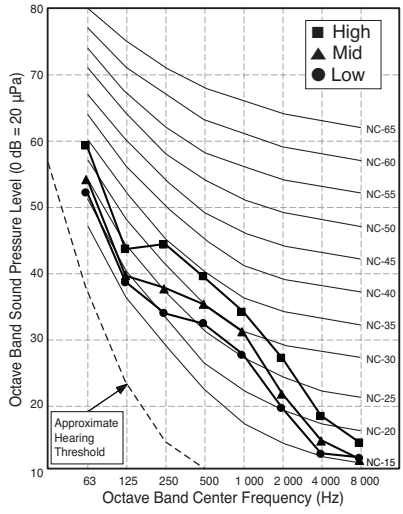

ARNU54GM3A4

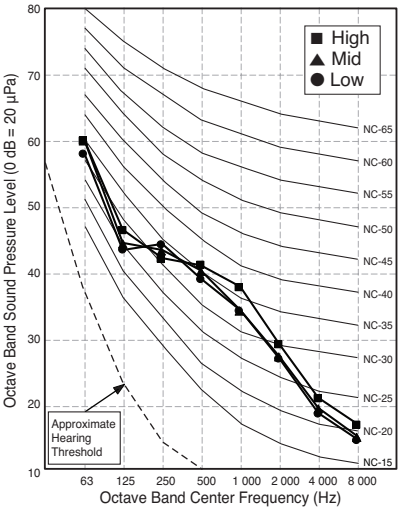

9. Sound Levels

Sound Pressure Level (49Pa)

ARNU28GM2A4

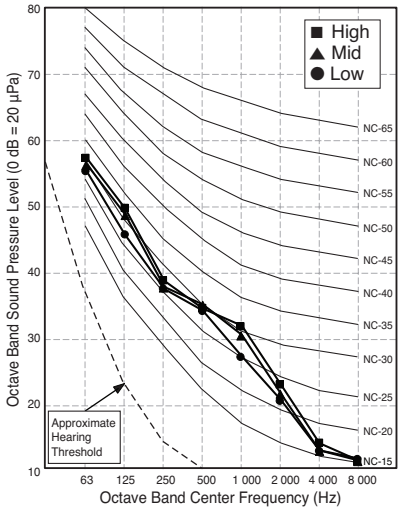

ARNU36GM2A4

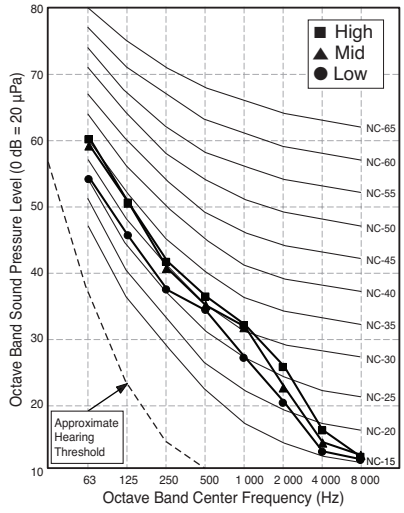

ARNU42GM2A4

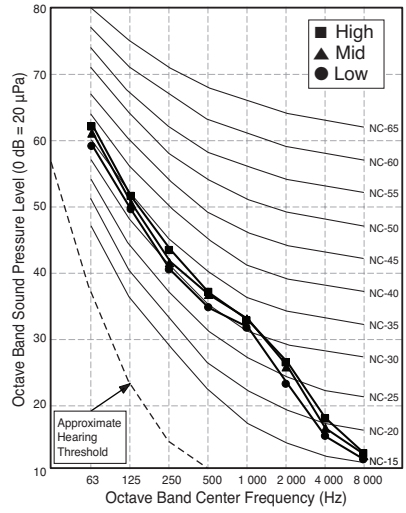

ARNU48GM3A4

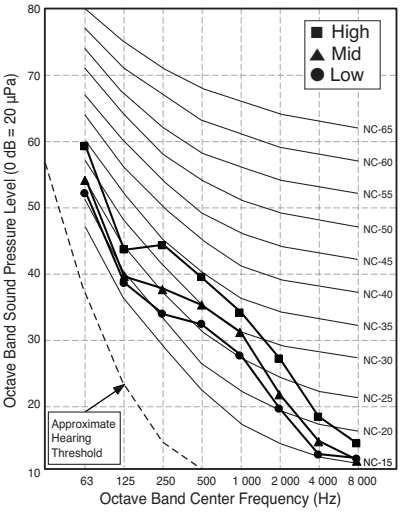

ARNU54GM3A4

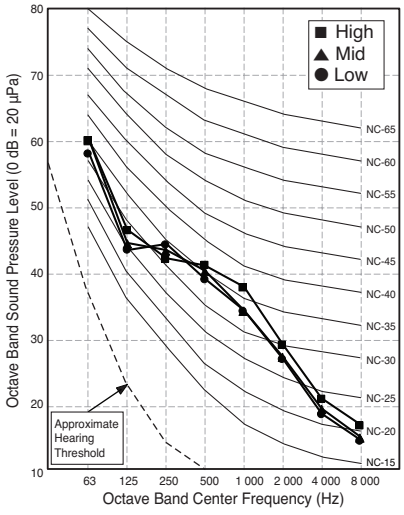

Sound Pressure Level (59Pa)

ARNU28GM2A4

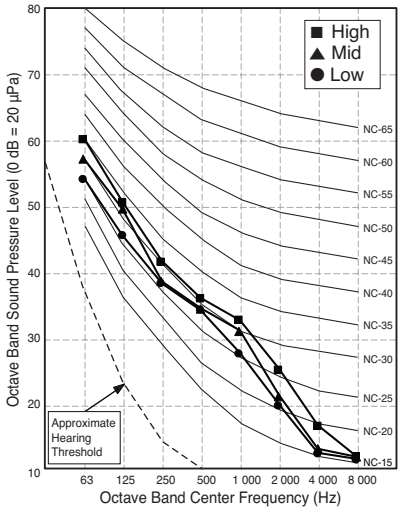

ARNU36GM2A4

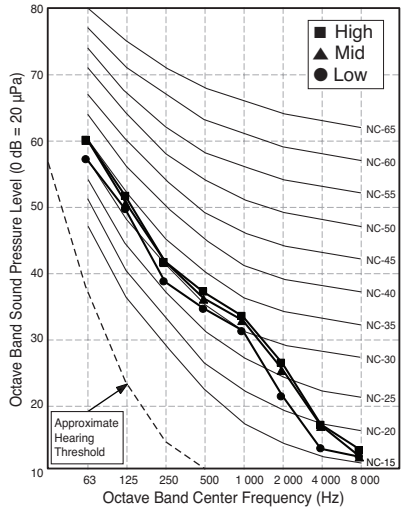

ARNU42GM2A4

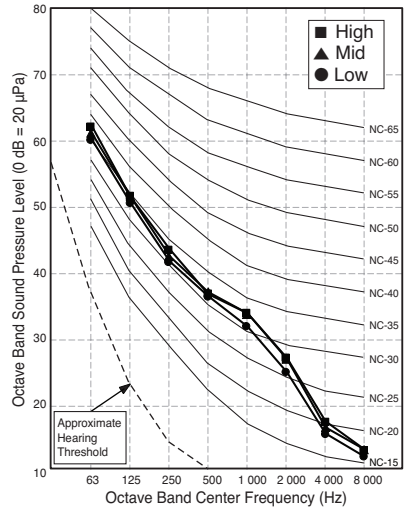

9. Sound Levels

ARNU48GM3A4

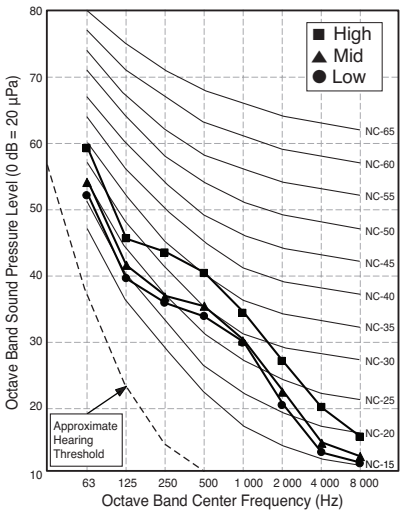

ARNU54GM3A4

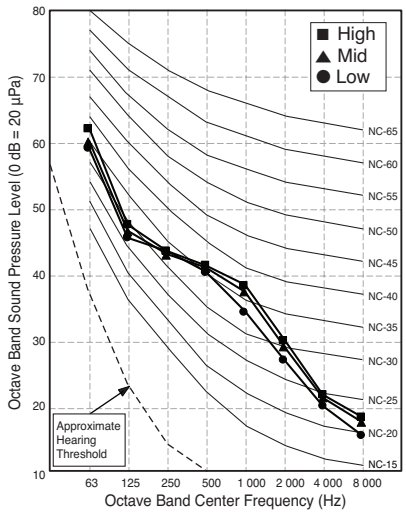

Sound Pressure Level (147Pa)

ARNU28GM2A4

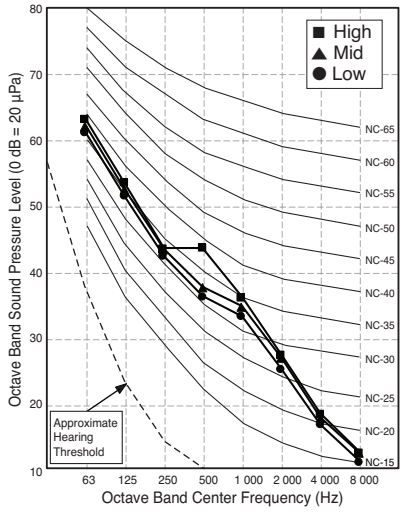

ARNU36GM2A4

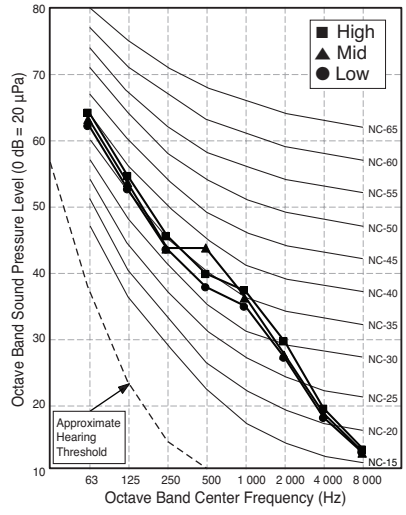

ARNU42GM2A4

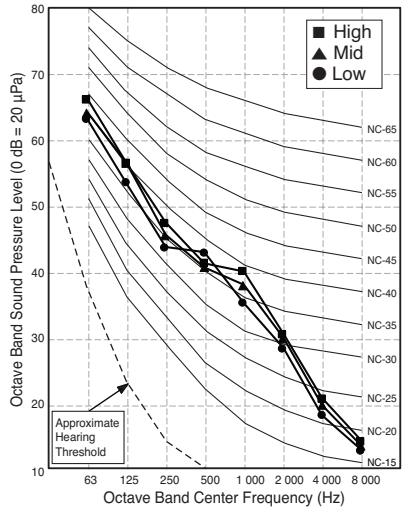

ARNU48GM3A4

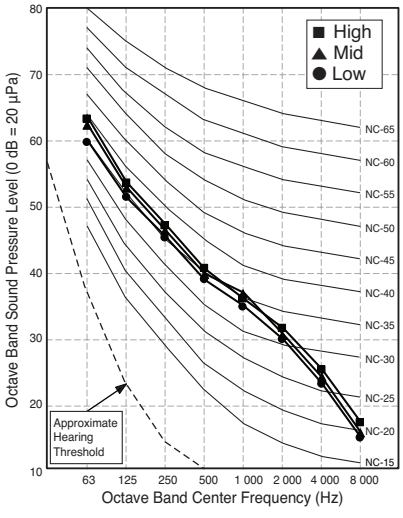

ARNU54GM3A4

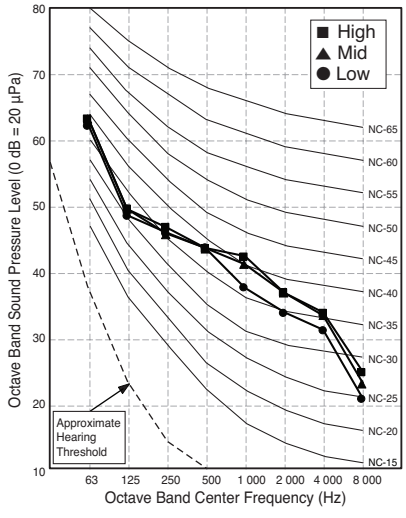

9. Sound Levels

9.2 Sound Power Levels

Model	Sound Power Levels dB(A)
	High Fan Speed
ARNU07GM1A4	55
ARNU09GM1A4	55
ARNU12GM1A4	55
ARNU15GM1A4	56
ARNU18GM1A4	58
ARNU24GM1A4	59
ARNU28GM2A4	59
ARNU36GM2A4	60
ARNU42GM2A4	62
ARNU48GM3A4	65
ARNU54GM3A4	66

Notes:
- Data is valid at diffuse field condition
- Data is valid at nominal operating condition
- Sound level can be increased in static pressure mode or used air guide.
- Sound power level is measured on the rated condition(external static pressure of standard mode) in the reverberation rooms.
- Sound level will vary depending on a range of factors such as the construction (acoustic absorption coefficient) of particular room in which the equipment in installed.
- Reference acoustic intensity 0dB = 10E-6μW/m²

ARNU07GM1A4

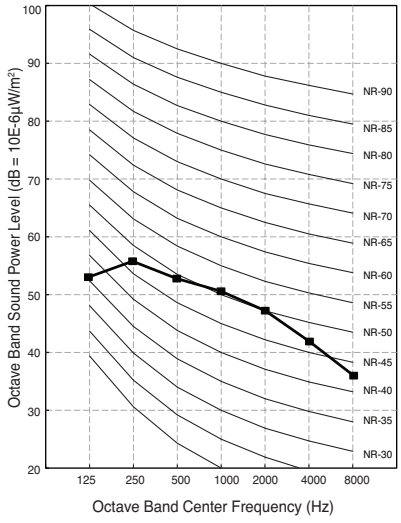

ARNU09GM1A4

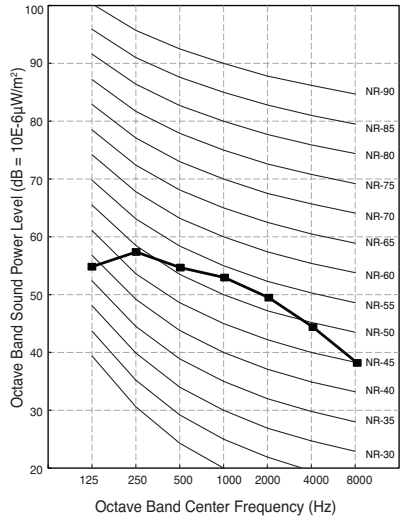

ARNU12GM1A4

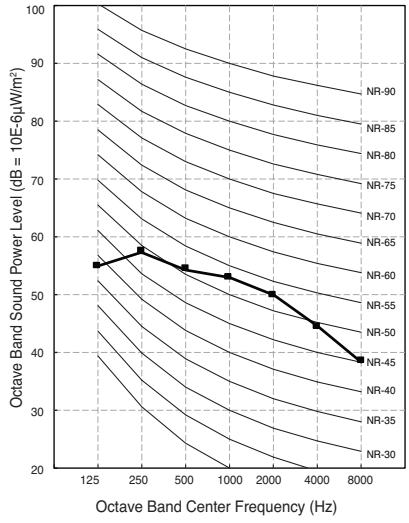

ARNU15GM1A4

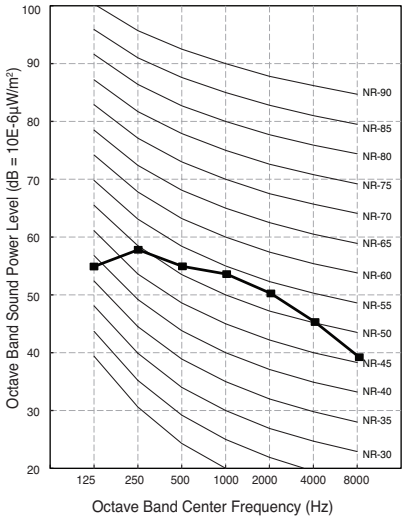

ARNU18GM1A4

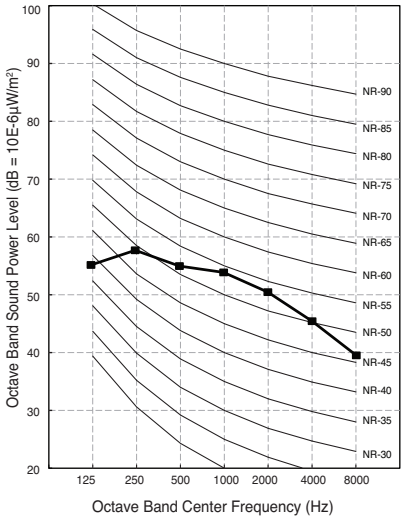

ARNU24GM1A4

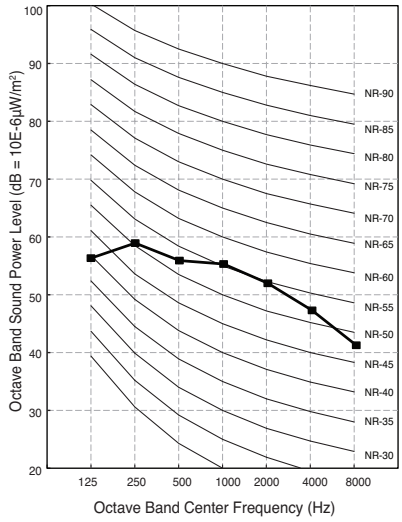

9. Sound Levels

ARNU28GM2A4

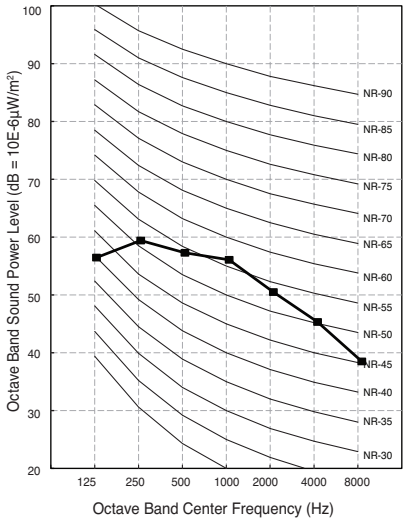

ARNU36GM2A4

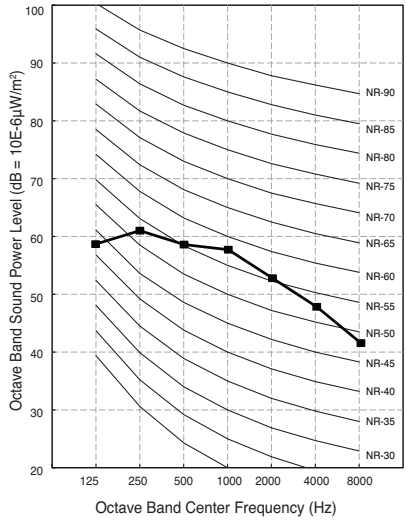

ARNU42GM2A4

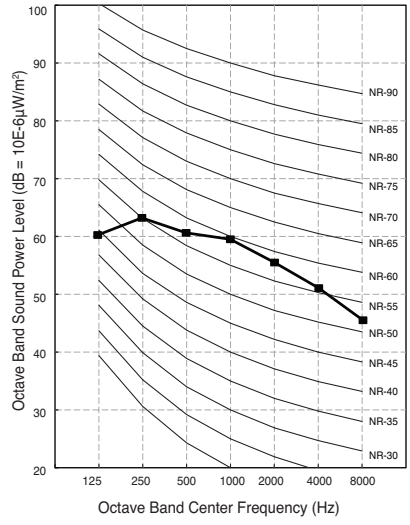

ARNU48GM3A4

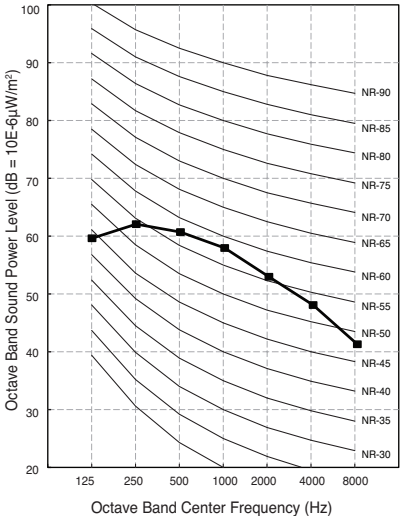

ARNU54GM3A4

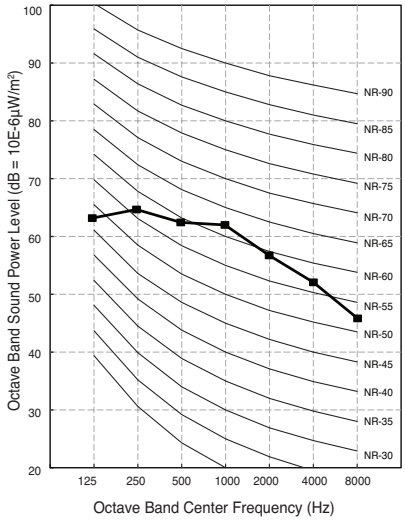

10. Installation

- Please read this instruction sheet completely before installing the product.
- When the power cord is damaged, replacement work shall be performed by authorized personnel only.
- Installation work must be performed in accordance with the national wiring standards by authorized personnel only.

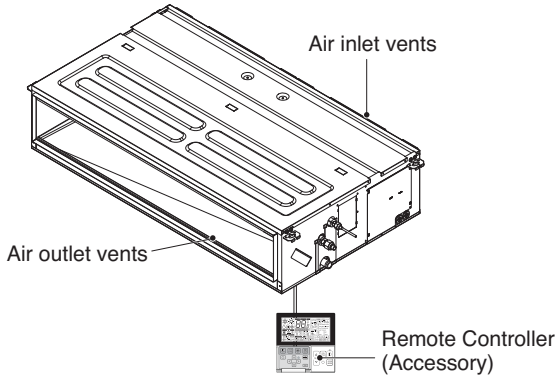

Required Parts

- Connecting cable
- Pipes: Gas side
  Liquid side
- Hanging Bolt
  (W 3/8 or M10 length 650mm)
- Insulated drain hose
- Additional Drain hose

Required Tools

- Level
- Screw driver
- Electric drill
- Hole core drill
- Flaring Tool set
- Torque Wrenches
- Hexagonal Wrench
- Gas-leak detector
- Thermometer

10.1 Selection of the best location

Install the air conditioner in the location that satisfies the following conditions.

- The place shall easily bear a load exceeding four times the indoor unit's weight.
- The place shall be able to inspect the unit as the figure.
- The place where the unit shall be leveled.
- The place shall allow easy water drainage.
  (Suitable dimension "H" is necessary to get a slope to drain as figure.)
- The place shall easily connect with the outdoor unit.
- The place where the unit is not affected by an electrical noise.
- The place where air circulation in the room will be good .
- There should not be any heat source or steam near the unit.
- The servicing inspection hole in the ceiling should be as large as the product
- The selection of the servicing hole should be approved by the customer

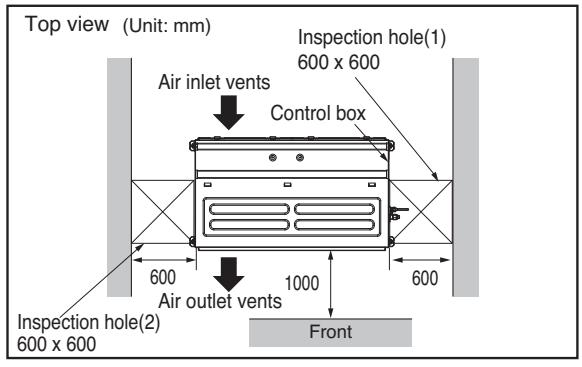

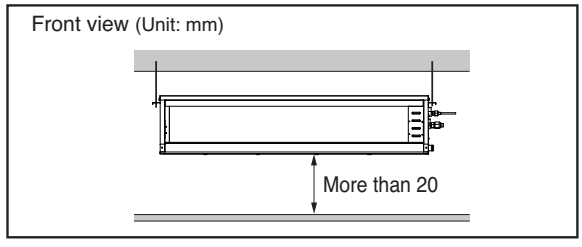

[Inspection Hole Standard]

Number of in spection hole	Distance between false ceiling & actual ceiling	Remarks
1	More than 100cm	Sufficient space in the ceiling for servicing.
2	20cm to 100cm	Insufficient space. Difficult for servicing
Hole size should be more than the size of IDU.	Less than 20cm	Minimum height for motor replacement.

10.2 Ceiling dimension and hanging bolt location

■ **Installation of Unit**

Install the unit above the ceiling correctly.

POSITION OF SUSPENSION BOLT

- Apply a joint-canvas between the unit and duct to absorb unnecessary vibration.
- Install the unit leaning to a drainage hole side as a figure for easy water drainage.
- A place where the unit will be leveled and that can support the weight of the unit.
- A place where the unit can withstand its vibration.
- A place where service can be easily performed.

(Unit:mm)

Dimension / Chassis name	A	B	C	D	E	F	G	H	I	J
M1	933.4	971.6	619.2	700	30	270	15.2	858	201.4	900
M2	1283.4	1321.6	619.2	700	30	270	15.2	1208	201.4	1250
M3	1283.4	1321.6	619.2	700	30	360	15.2	1208	291.4	1250

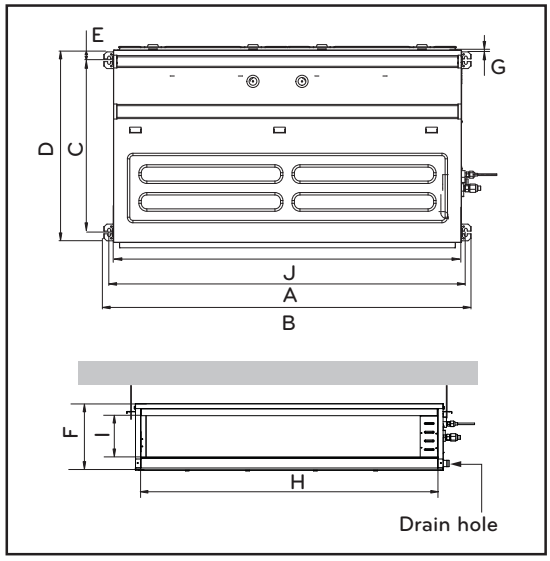

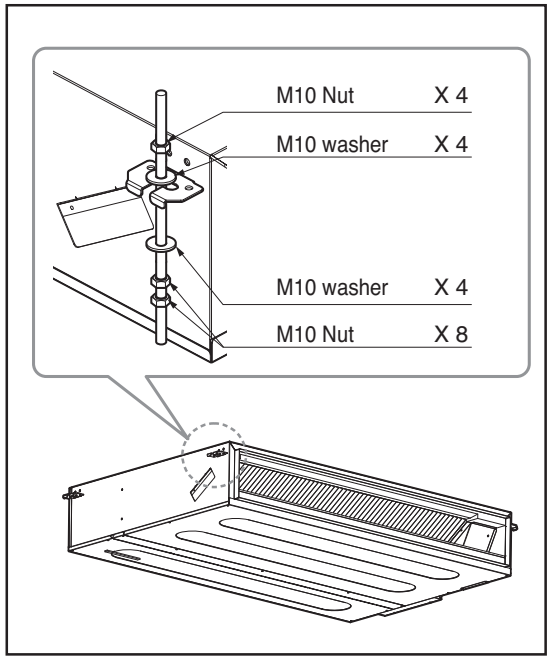

NOTE:

- Throughly study the following installation locations:

1. In such places as restaurants and kitchens, considerable amount of oil steam and flour adhere to the fan, the fin of the heat exchanger, resulting in heat exchange reduction, spraying, dispersing of water drops, etc.
   In these cases, take the following actions:
   - Make sure that the ventilation fan for smoke-collecting hood on a cooking table has sufficient capacity so that it draws oily steam which should not flow into the suction of the air conditioner.
   - Make enough distance from a cooking room to install the air conditioner in such a place where it may not suck in oil steam.
2. Avoid installing air conditioner in such circumstances where cutting oil mist or iron powder is in suspension in factories, etc.
3. Avoid places where inflammable gas is generated, flows in, is stored or vented.
4. Avoid places where sulfurous acid gas or corrosive gas is generated.
5. Avoid places near high frequency generators.

10. Installation

- Select and mark the position for fixing bolts.
- Drill the hole for set anchor on the face of ceiling.

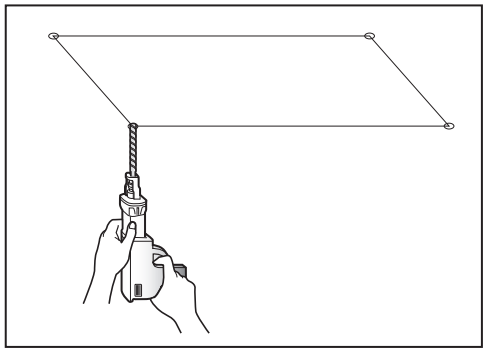

- Insert the set anchor and washer onto the suspension bolts for locking the suspension bolts on the ceiling.
- Mount the suspension bolts to the set anchor firmly.
- Secure the installation plates onto the suspension bolts (adjust level roughly) using nuts, washers and spring washers.

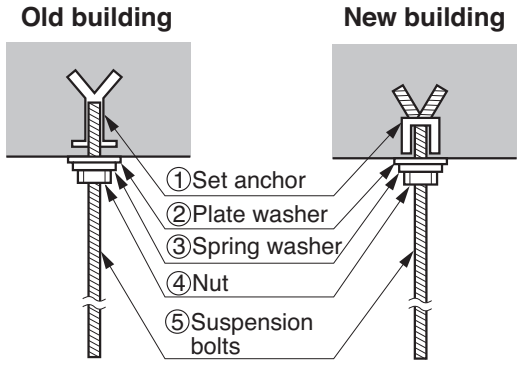

⚠ CAUTION

Tighten the nut and bolt to prevent unit falling.

10.3 Connecting Cables between Indoor Unit and Outdoor Unit

Connect the wires to the terminals on the control board individually according to the outdoor unit connection.

- Ensure that the color of the wires of outdoor unit and the terminal No. are the same as those of indoor unit respectively

• M1 Chassis

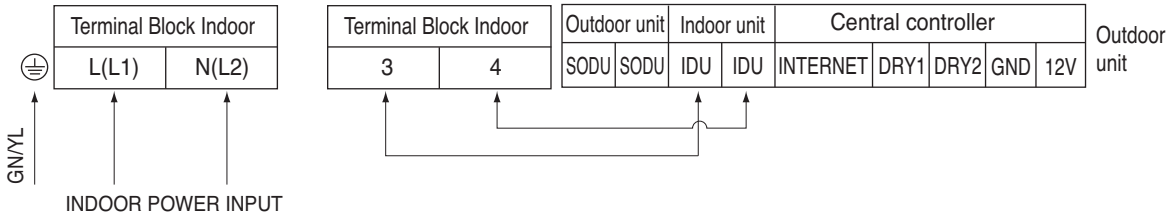

• M2 / M3 Chassis

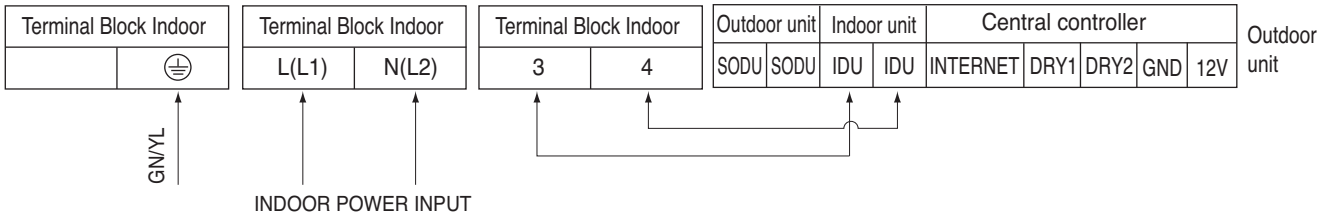

⚠ WARNING

Make sure that the screws of the terminal are not loose.

Clamping of cables

1) Arrange 2 power cables on the control panel.
2) First, fasten the steel clamp with a screw to the inner boss of control panel.
3) For the cooling model, fix the other side of the clamp with a screw strongly. For the heat pump model, put the 0.75mm² cable(thinner cable) on the clamp and tighten it with a plastic clamp to the other boss of the control panel.

THERMAL INSULATION All thermal insulation must comply with local requirement.

INDOOR UNIT

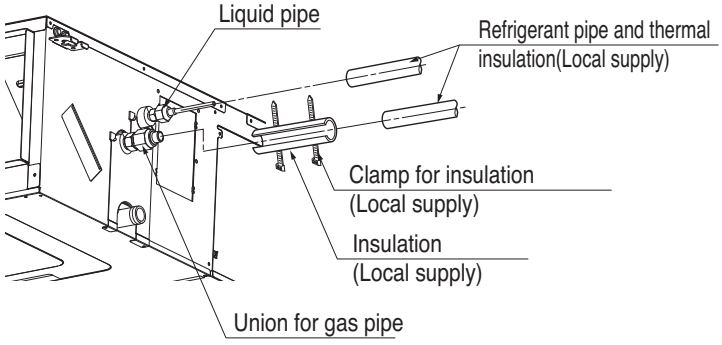

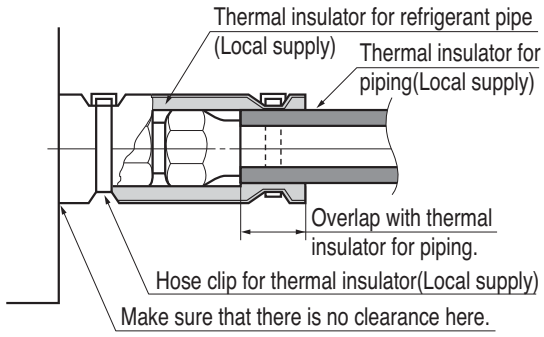

10.4 Checking the Drainage

1) Checking the Drainage

1. Remove the Air Filter.

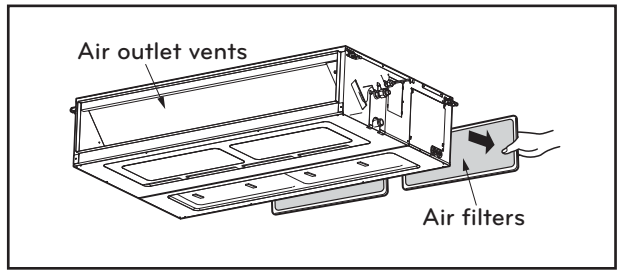

2. Check the drainage.

- Spray one or two glasses of water on the evaporator.
- Ensure that water flows through drain hose of indoor unit without any leakage.

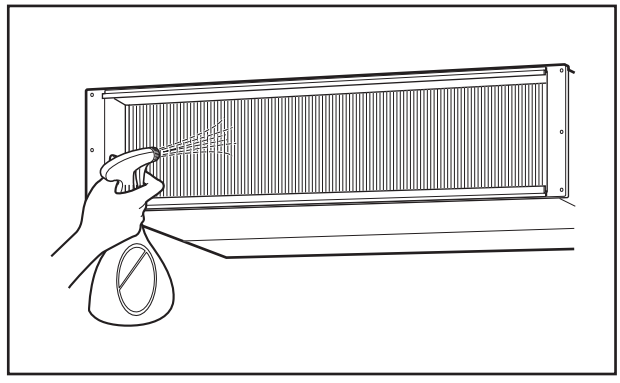

Indoor Units

10.5 Indoor Unit Drain Piping

- Drain piping must have down-slope (1/50 to 1/100): be sure not to provide up-and-down slope to prevent reversal flow.
- During drain piping connection, be careful not to exert extra force on the drain port on the indoor unit.
- The outside diameter of the drain connection on the indoor unit is 32mm.

Piping material: Polyvinyl chloride pipe inner diometes Ø 25mm and pipe fittings

- Be sure to install heat insulation on the drain piping.

Heat insulation material: Polyethylene foam with thickness more than 8 mm.

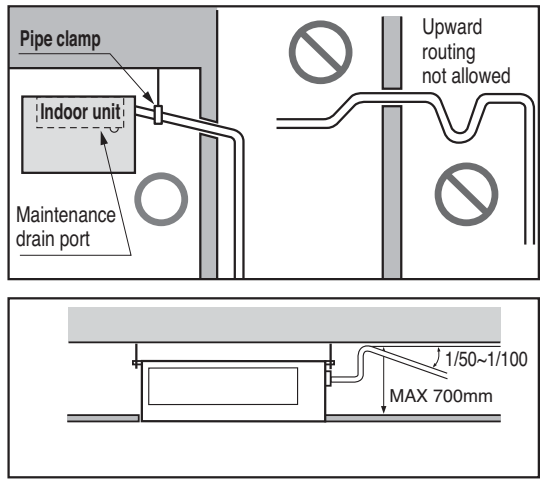

Drain test

The air conditioner uses a drain pump to drain water.
Use the following procedure to test the drain pump operation:

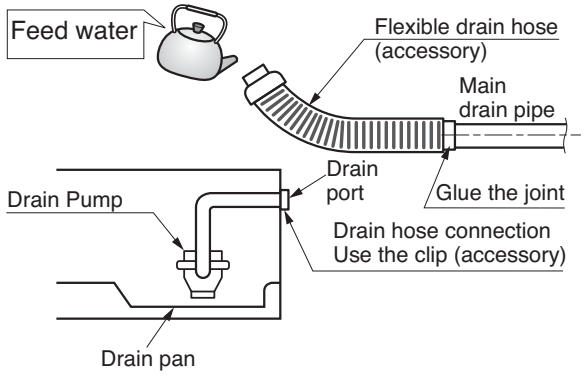

- Connect the main drain pipe to the exterior and leave it provisionally until the test comes to an end.
- Feed water to the flexible drain hose and check the piping for leakage.
- Be sure to check the drain pump for normal operation and noise when electrical wiring is complete.
- When the test is complete, connect the flexible drain hose to the drain port on the indoor unit.

⚠ CAUTION

The supplied flexible drain hose should not be strained.
A strained hose may cause leakage of water.

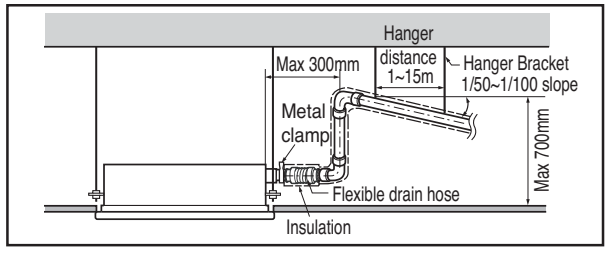

10.6 Ground drain piping

a) It is standard work practice to make connections to the main pipe from above. The pipe down from the combination should be as large as possible.

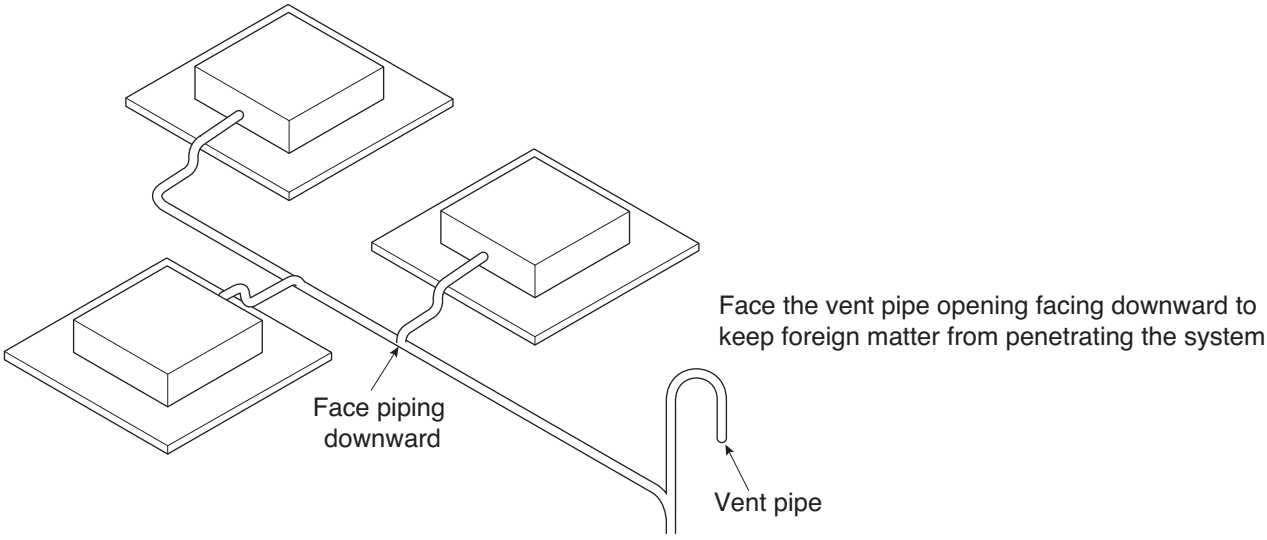

b) The pipe work should be kept as short as possible and the number of indoor units per group kept to a minimum.

10.7 Use of an auxiliary drain hose(flexible)

a) To connect drain pipe to the drain socket on the indoor unit, an auxiliary flexible drain hose should be used. auxiliary flexible drain hose allows that the drain pipe can be connected to the socket without breaking by excessive strain.

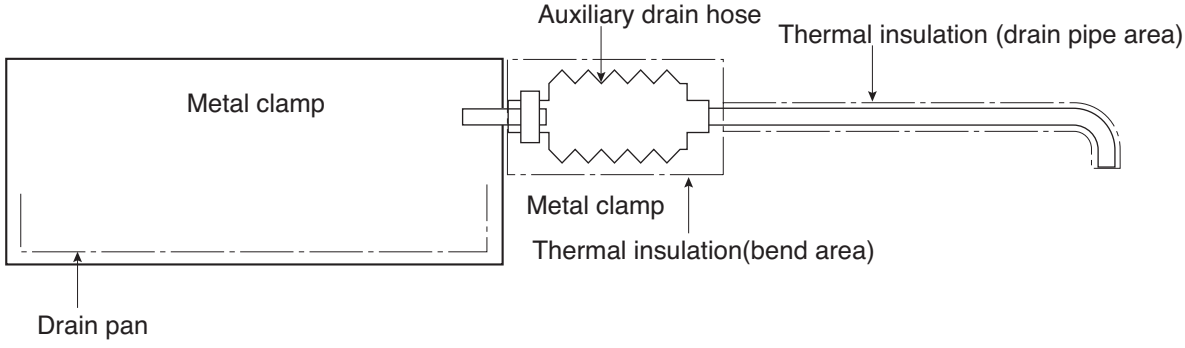

❊ Important points

- The drain pipe should be at least equal in size to that of the indoor unit.
- The drain pipe is thermally insulated to prevent the formation of condensation inside the pipe.
- The drain up mechanism should be fitted before the indoor unit is installed and when the electricity has been connected some water should be added to the drain pan and the drain pump to check and see if it is functioning correctly.
- All connections should be secure. (Special care is needed with PVC pipe)
- Insulate auxiliary drain hose with thermal insulation band.

WIRED REMOTE CONTROLLER INSTALLATION

• Since the room temperature sensor is in the remote controller, the remote controller box should be installed in a place away from direct sunlight, high humidity and direct supply of cold air to maintain proper space temperature.
Install the remote controller about 5ft(1.5m) above the floor in an area with good air circulation at an average temperature.

Do not install the remote controller where it can be affected by:

- Drafts, or dead spots behind doors and in corners.
- Hot or cold air from ducts.
- Radiant heat from sun or appliances.
- Concealed pipes and chimneys.
- Uncontrolled areas such as an outside wall behind the remote controller.
- This remote controller is equipped with a seven segment LED. display. For proper display of the remote controller LED's, the remote controller should be installed properly as shown in Fig.1.
(The standard height is 1.2~1.5 m from floor level.)

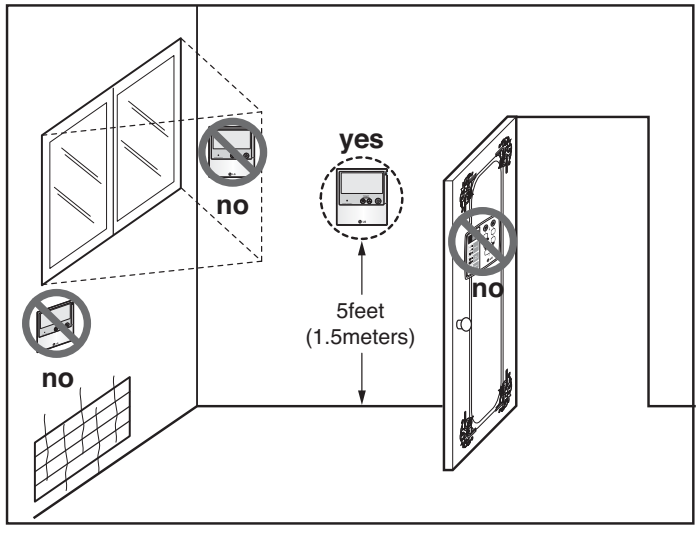

Fig.1 Typical locations for remote controller

11. Accessories

Standard Accessories

Name	Drain hose	Clamp metal	Washer for hanging backet	Clamp (Tie Wrap)	Insulation for fitting	(Other)
Quantity	1 EA	1 EA	8 EA	4 EA	1 SET	
Shape				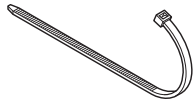	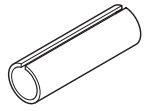 for gas pipe 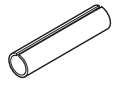 for liquid pipe	• Owner's manual • Installation manual

⚠ CAUTION

• Use only those accessories (Standard or optional) which have designated specifications.

MULTI V™ Indoor unit

Ceiling Concealed Duct(Low Static)

1. List of functions

2. Specifications

3. Dimensions & Gravity point

4. Piping Diagrams

5. Wiring Diagrams

6. Capacity Tables

7. External Static Pressure (E.S.P) & Air Flow

8. Electric Characteristics

9. Sound Levels

10. Installation

11. Accessories

1. List of functions

Category	Function	ARNU05GL1G4, ARNU07GL1G4, ARNU09GL1G4, ARNU12GL2G4, ARNU15GL2G4, ARNU18GL2G4, ARNU21GL3G4, ARNU24GL3G4
Air flow	Air supply outlet	1
	Airflow direction control(left & right)	-
	Airflow direction control(up & down)	-
	Auto swing(left & right)	-
	Auto swing(up & down)	-
	Airflow steps(fan/cool/heat)	3 / 3 / 3
	Chaos swing	-
	Chaos wind(auto wind)	-
	Jet cool(Power wind)	-
	Swirl wind	-
Air purifying	Deodorizing filter	X
	Plasma air purifier	X
	Prefilter(washable / anti-fungus)	O
Installation	Drain pump	O
	E.S.P. control	O
	Electric heater(operation)	X
	High ceiling operation	-
Reliability	Hot start	O
	Self diagnosis	O
	Soft dry operation	O
Convenience	Auto changeover	O(Heat recovery)
	Auto cleaning	X
	Auto operation(artificial intelligence)	O(Heat pump or Cooling only)
	Auto restart operation	O
	Child lock	O
	Forced operation	-
	Group control	O
	Sleep mode	X
	Timer(on/off)	O
	Timer(weekly)	O
	Two thermistor control	O
	External On/Off	O
Individual control	Wide wired remote controller (RS2)	PQRCVSL0/PQRCVSL0QW
	Wide wired remote controller (RS2 Plus)	PREMTB001/PREMTBB01
	Premium wired remote controller	PREMTA000/PREMTA000A/PREMTA000B
	Simple wired remote controller	PQRCVCL0Q(W)
	Wired remote controller(for hotel use)	PQRCHCA0Q(W)
	Wireless LCD remote control	PQWRH(C)Q0FDB
Special function kit	Zone control	-
	CTIE	-
	Electro thermostat	-
	Remote temperature sensor	PQRSTA0
	Group control wire	PZCWRCG3
	Dry contact	PDRYCB000/PDRYCB100/PDRYCB300/PDRYCB400/PDRYCB500

O : Applied X : Not applied – : No relation

Option : Model name & price are different according to options, and assembled in factory with main unit.

Accessory : Installed at field, ordered and purchased separately by the corresponding model name, supplied with separate package.

2. Specifications

Type			Ceiling Concealed Duct (Low Static)		
Model		Unit	ARNU05GL1G4	ARNU07GL1G4	ARNU09GL1G4
Cooling Capacity		kW	1.7	2.2	2.8
		kcal/h	1,500	1,900	2,400
		Btu/h	5,800	7,500	9,600
Heating Capacity		kW	1.9	2.5	3.2
		kcal/h	1,600	2,200	2,800
		Btu/h	6,500	8,500	10,900
Casing			Galvanized Steel Plate	Galvanized Steel Plate	Galvanized Steel Plate
Dimensions(WxHxD)	Body	mm	700 x 190 x 700	700 x 190 x 700	700 x 190 x 700
		inch	27-9/16 x 7-15/32 x 27-9/16	27-9/16 x 7-15/32 x 27-9/16	27-9/16 x 7-15/32 x 27-9/16
Coil	Rows x Columns x FPI		2 x 11 x 14	2 x 11 x 14	2 x 11 x 14
	Face Area	m^2	0.12	0.12	0.12
Fan	Type		Sirocco Fan	Sirocco Fan	Sirocco Fan
	Motor Output x Number	W	19 x 1	19 x 1	19 x 1
	Running Current	A	0.4	0.4	0.4
	Air Flow Rate(H / M / L)	CMM	6.7 / 6.2 / 5.5	7.5 / 6.5 / 5.5	9.0 / 7.0 / 5.5
	(High Mode-factory set)	cfm	240 / 220 / 200	270 / 230 / 200	320 / 250 / 200
	External Static Pressure	mmAq(Pa)	2.54 (25)	2.54 (25)	2.54 (25)
	Air Flow Rate(H / M / L)	CMM	6.7 / 6.2 / 5.5	7.5 / 6.5 / 5.5	9.0 / 7.0 / 5.5
	(Standard Mode)	cfm	240 / 220 / 200	270 / 230 / 200	320 / 250 / 200
	External Static Pressure	mmAq(Pa)	0 (0)	0 (0)	0 (0)
	Drive		Direct	Direct	Direct
	Motor type		BLDC	BLDC	BLDC
Temperature Control			Microprocessor, Thermostat for cooling and heating		
Sound Absorbing Thermal Insulation Material			Foamed polystrene	Foamed polystrene	Foamed polystrene
Air Filter			-	-	-
Safety Device			Fuse	Fuse	Fuse
Pipe Connections	Liquid Side	mm(inch)	Ø6.35(1/4)	Ø6.35(1/4)	Ø6.35(1/4)
	Gas Side	mm(inch)	Ø12.7(1/2)	Ø12.7(1/2)	Ø12.7(1/2)
	Drain Pipe(Internal Dia.)	mm(inch)	25.4(1)	25.4(1)	25.4(1)
Net Weight		kg(lbs)	17.5 (38.6)	17.5 (38.6)	17.5 (38.6)
Noise Level (Sound Pressure, 1.5m, H/M/L)		dB(A)	25 / 24 / 22	26 / 24 / 22	28 / 25 / 22
Power Supply		Ø, V, Hz	1, 220 - 240, 50	1, 220 - 240, 50	1, 220 - 240, 50
			1, 220, 60	1, 220, 60	1, 220, 60
Refrigerant Control			EEV	EEV	EEV
Transmission cable		mm^2	1.0~1.5 x 2C	1.0~1.5 x 2C	1.0~1.5 x 2C

Notes:-

1. Capacities are based on the following conditions:
   - Cooling
     - Indoor temp. 27°C[80.6°F]DB/ 19°C[66.2°F]WB
     - Outdoor temp. 35°C[95°F]DB/ 24°C[75.2°F]WB
     - Interconnecting Piping Length 7.5m
     - Level Difference of Zero
   - Heating
     - Indoor temp. 20°C[68°F]DB/ 15°C[59°F]WB
     - Outdoor temp. 7°C[44.6°F]DB/ 6°C[42.8°F]WB
     - Interconnecting Piping Length 7.5m
     - Level Difference of Zero
2. Capacities are net capacities
3. Due to our policy of innovation some specifications may be changed without prior notification
4. Wiring cable size must comply with the applicable local and national codes. And “Electric characteristics” chapter should be considered for electrical work and design. Especially the power cable and circuit breaker should be selected in accordance with that.
4. EEV : Electronic Expansion Valve
5. Sound pressure levels are measured at 20Pa External Static Pressure condition.
6. Anechoic chamber conversion value is measured at 1.5 m downward from unit centre.
   The values depends on the ambient conditions and values are normally higher in actual operation.

Conversion Formula
kcal/h= kW x 860
Btu/h = kW x 3412
cfm = m^3/min x 35.3
l/s = CMM x 1000/60

2. Specifications

Type			Ceiling Concealed Duct (Low Static)		
Model		Unit	ARNU12GL2G4	ARNU15GL2G4	ARNU18GL2G4
Cooling Capacity		kW	3.6	4.5	5.6
		kcal/h	3,100	3,900	4,800
		Btu/h	12,300	15,400	19,100
Heating Capacity		kW	4.0	5.0	6.3
		kcal/h	3,400	4,300	5,400
		Btu/h	13,600	17,100	21,500
Casing			Galvanized Steel Plate	Galvanized Steel Plate	Galvanized Steel Plate
Dimensions(WxHxD)	Body	mm	900 x 190 x 700	900 x 190 x 700	900 x 190 x 700
		inch	35-7/16 x 7-15/32 x 27-9/16	35-7/16 x 7-15/32 x 27-9/16	35-7/16 x 7-15/32 x 27-9/16
Coil	Rows x Columns x FPI		2 x 11 x 18	2 x 11 x 18	2 x 11 x 18
	Face Area	m^2	0.17	0.17	0.17
Fan	Type		Sirocco Fan	Sirocco Fan	Sirocco Fan
	Motor Output x Number	W	19 x 1, 5 x 1	19 x 1, 5 x 1	19 x 1, 5 x 1
	Running Current	A	0.76	0.76	0.76
	Air Flow Rate(H / M / L)	CMM	10.0 / 8.5 / 7.0	12.5 / 10.0 / 8.5	15.0 / 12.5 / 10.0
	(High Mode-factory set)	cfm	360 / 310 / 250	450 / 360 / 310	530 / 450 / 360
	External Static Pressure	mmAq(Pa)	2.54 (25)	2.54 (25)	2.54 (25)
	Air Flow Rate(H / M / L)	CMM	10.0 / 8.5 / 7.0	12.5 / 10.0 / 8.5	15.0 / 12.5 / 10.0
	(Standard Mode)	cfm	360 / 310 / 250	450 / 360 / 310	530 / 450 / 360
	External Static Pressure	mmAq(Pa)	0 (0)	0 (0)	0 (0)
	Drive		Direct	Direct	Direct
	Motor type		BLDC	BLDC	BLDC
Temperature Control			Microprocessor, Thermostat for cooling and heating		
Sound Absorbing Thermal Insulation Material			Foamed polystrene	Foamed polystrene	Foamed polystrene
Air Filter			-	-	-
Safety Device			Fuse	Fuse	Fuse
Pipe Connections	Liquid Side	mm(inch)	Ø6.35(1/4)	Ø6.35(1/4)	Ø6.35(1/4)
	Gas Side	mm(inch)	Ø12.7(1/2)	Ø12.7(1/2)	Ø12.7(1/2)
	Drain Pipe(Internal Dia.)	mm(inch)	25.4(1)	25.4(1)	25.4(1)
Net Weight		kg(lbs)	23 (50.7)	23 (50.7)	23 (50.7)
Noise Level (Sound Pressure, 1.5m, H/M/L)		dB(A)	30 / 27 / 25	33 / 30 / 28	35 / 32 / 29
Power Supply		Ø, V, Hz	1, 220 - 240, 50	1, 220 - 240, 50	1, 220 - 240, 50
			1, 220, 60	1, 220, 60	1, 220, 60
Refrigerant Control			EEV	EEV	EEV
Transmission cable		mm^2	1.0~1.5 x 2C	1.0~1.5 x 2C	1.0~1.5 x 2C

Notes:-

1. Capacities are based on the following conditions:
   - Cooling
     - Indoor temp. 27°C[80.6°F]DB/ 19°C[66.2°F]WB
     - Outdoor temp. 35°C[95°F]DB/ 24°C[75.2°F]WB
     - Interconnecting Piping Length 7.5m
     - Level Difference of Zero
   - Heating
     - Indoor temp. 20°C[68°F]DB/ 15°C[59°F]WB
     - Outdoor temp. 7°C[44.6°F]DB/ 6°C[42.8°F]WB
     - Interconnecting Piping Length 7.5m
     - Level Difference of Zero
2. Capacities are net capacities
3. Due to our policy of innovation some specifications may be changed without prior notification
4. Wiring cable size must comply with the applicable local and national codes. And “Electric characteristics” chapter should be considered for electrical work and design. Especially the power cable and circuit breaker should be selected in accordance with that.
4. EEV : Electronic Expansion Valve
5. Sound pressure levels are measured at 20Pa External Static Pressure condition.
6. Anechoic chamber conversion value is measured at 1.5 m downward from unit centre.
   The values depends on the ambient conditions and values are normally higher in actual operation.

Conversion Formula
kcal/h= kW x 860
Btu/h = kW x 3412
cfm = m^3/min x 35.3
l/s = CMM x 1000/60

2. Specifications

Type			Ceiling Concealed Duct (Low Static)	
Model		Unit	ARNU21GL3G4	ARNU24GL3G4
Cooling Capacity		kW	6.2	7.1
		kcal/h	5,300	6,100
		Btu/h	21,000	24,000
Heating Capacity		kW	7.0	8.0
		kcal/h	6,000	6,900
		Btu/h	23,900	27,300
Casing			Galvanized Steel Plate	Galvanized Steel Plate
Dimensions(WxHxD)	Body	mm	1,100 x 190 x 700	1,100 x 190 x 700
		inch	43-5/16 x 7-15/32 x 27-9/16	43-5/16 x 7-15/32 x 27-9/16
Coil	Rows x Columns x FPI		2 x 11 x 18	2 x 11 x 18
	Face Area	m^2	0.21	0.21
Fan	Type		Sirocco Fan	Sirocco Fan
	Motor Output x Number	W	19 x 2	19 x 2
	Running Current	A	0.97	0.97
	Air Flow Rate(H / M / L)	CMM	17.5 / 14.0 / 12.0	20.0 / 16.0 / 12.0
	(High Mode-factory set)	cfm	620 / 500 / 430	710 / 570 / 430
	External Static Pressure	mmAq(Pa)	2.54 (25)	2.54 (25)
	Air Flow Rate(H / M / L)	CMM	17.5 / 14.0 / 12.0	20.0 / 16.0 / 12.0
	(Standard Mode)	cfm	620 / 500 / 430	710 / 570 / 430
	External Static Pressure	mmAq(Pa)	0 (0)	0 (0)
	Drive		Direct	Direct
	Motor type		BLDC	BLDC
Temperature Control			Microprocessor, Thermostat for cooling and heating	
Sound Absorbing Thermal Insulation Material			Foamed polystrene	Foamed polystrene
Air Filter			-	-
Safety Device			Fuse	Fuse
Pipe Connections	Liquid Side	mm(inch)	Ø9.52(3/8)	Ø9.52(3/8)
	Gas Side	mm(inch)	Ø15.88(5/8)	Ø15.88(5/8)
	Drain Pipe(Internal Dia.)	mm(inch)	25.4(1)	25.4(1)
Net Weight		kg(lbs)	27 (59.5)	27 (59.5)
Noise Level (Sound Pressure, 1.5m, H/M/L)		dB(A)	35 / 29 / 28	36 / 33 / 28
Power Supply		Ø, V, Hz	1, 220 - 240, 50	1, 220 - 240, 50
			1, 220, 60	1, 220, 60
Refrigerant Control			EEV	EEV
Transmission cable		mm^2	1.0~1.5 x 2C	1.0~1.5 x 2C

Notes:-

1. Capacities are based on the following conditions:
   - Cooling
     - Indoor temp. 27°C[80.6°F]DB/ 19°C[66.2°F]WB
     - Outdoor temp. 35°C[95°F]DB/ 24°C[75.2°F]WB
     - Interconnecting Piping Length 7.5m
     - Level Difference of Zero
   - Heating
     - Indoor temp. 20°C[68°F]DB/ 15°C[59°F]WB
     - Outdoor temp. 7°C[44.6°F]DB/ 6°C[42.8°F]WB
     - Interconnecting Piping Length 7.5m
     - Level Difference of Zero
2. Capacities are net capacities
3. Due to our policy of innovation some specifications may be changed without prior notification
4. Wiring cable size must comply with the applicable local and national codes. And “Electric characteristics” chapter should be considered for electrical work and design. Especially the power cable and circuit breaker should be selected in accordance with that.
4. EEV : Electronic Expansion Valve
5. Sound pressure levels are measured at 20Pa External Static Pressure condition.
6. Anechoic chamber conversion value is measured at 1.5 m downward from unit centre.
   The values depends on the ambient conditions and values are normally higher in actual operation.

Conversion Formula
kcal/h= kW x 860
Btu/h = kW x 3412
cfm = m^3/min x 35.3
l/s = CMM x 1000/60

Ceiling Concealed Duct (Low Static)

ARNU05GL1G4
ARNU07GL1G4
ARNU09GL1G4
ARNU12GL2G4
ARNU15GL2G4
ARNU18GL2G4
ARNU21GL3G4
ARNU24GL3G4

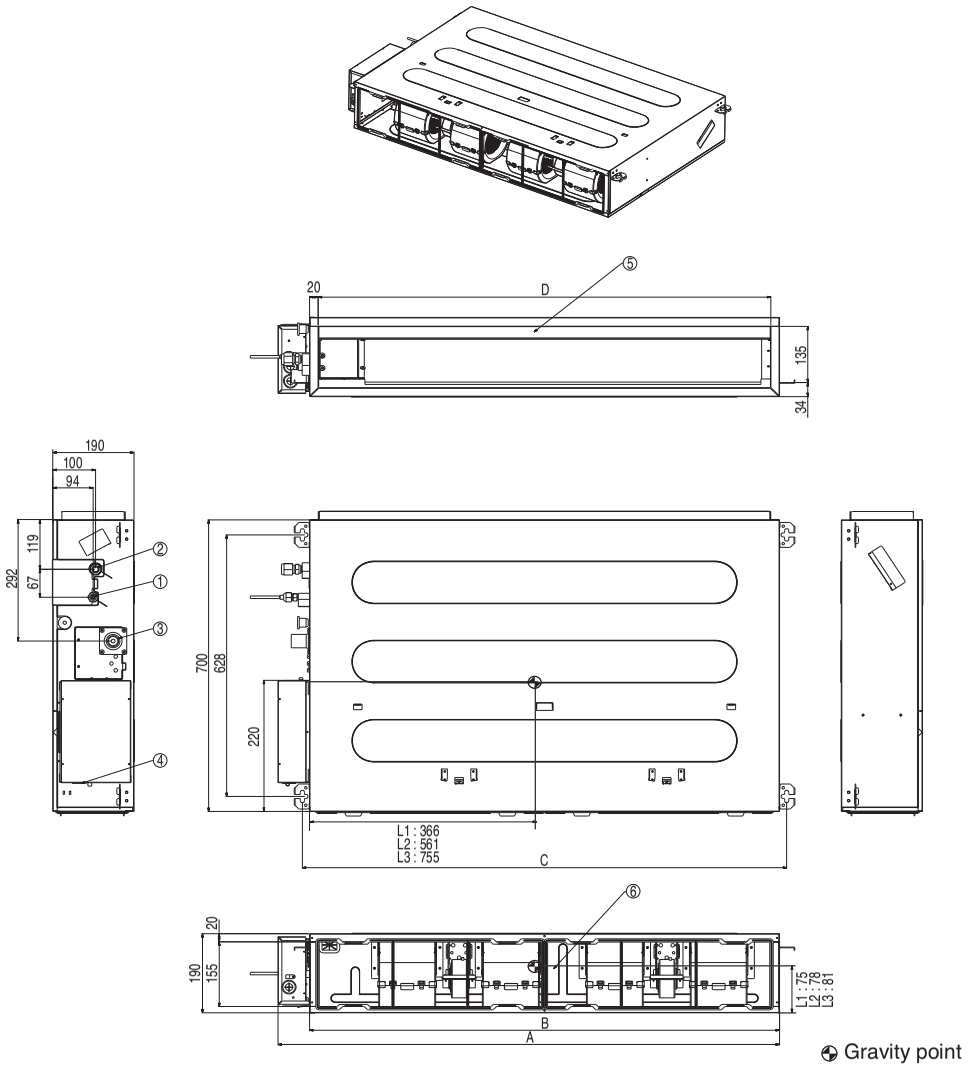

(unit: mm)

	A	B	C	D
ARNU05GL1G4 ARNU07GL1G4 ARNU09GL1G4	774	700	733	660
ARNU12GL2G4 ARNU15GL2G4 ARNU18GL2G4	974	900	933	860
ARNU21GL3G4 ARNU24GL3G4	1,174	1,100	1,133	1,060

(unit : mm)

Number	Name	Descripition
1	Liquid pipe connection	Unit size(5k,7k,9k,12k,18k) : 6.35 Unit size(21k, 24k) : 9.52
2	Gas pipe connection	Unit size(5k,7k,9k,12k,18k) : 12.7 Unit size(21k, 24k) : 15.88
3	Drain pipe connection	
4	Power supply connection	
5	Air discharge	
6	Air suction	

▣ Note
1. Unit should be installed in compliance with the installation manual in the product box.
2. Unit shall be grounded in accordance with the local regulations or applicable national codes.

LG Electronics

CHASSIS CODE: L1/L2/L3

4. Piping Diagrams

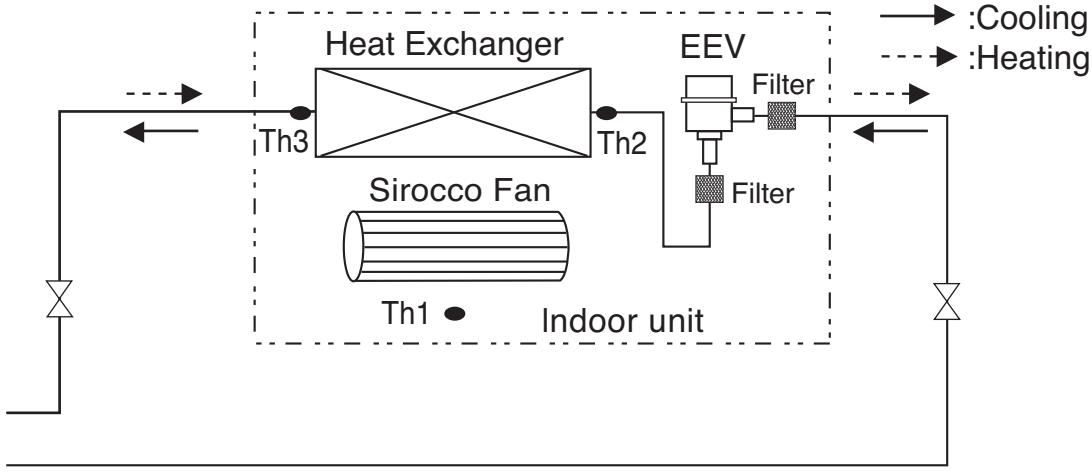

Refrigerant pipe connection port diameter

[Unit: mm(inch)]

MODEL	GAS	LIQUID
ARNU05GL1G4	Ø12.7(1/2)	Ø6.35(1/4)
ARNU07GL1G4	Ø12.7(1/2)	Ø6.35(1/4)
ARNU09GL1G4	Ø12.7(1/2)	Ø6.35(1/4)
ARNU12GL2G4	Ø12.7(1/2)	Ø6.35(1/4)
ARNU15GL2G4	Ø12.7(1/2)	Ø6.35(1/4)
ARNU18GL2G4	Ø12.7(1/2)	Ø6.35(1/4)
ARNU21GL3G4	Ø15.88(5/8)	Ø9.52(3/8)
ARNU24GL3G4	Ø15.88(5/8)	Ø9.52(3/8)

LOC.	Description	PCB Connector (Color)
Th1	Thermistor for room air temperature	CN-ROOM (Yellow)
Th2	Thermistor for pipe in temperature	CN-PIPE_IN (White)
Th3	Thermistor for pipe out temperature	CN-PIPE_OUT (Red)

5. Wiring Diagrams

L1 Chassis

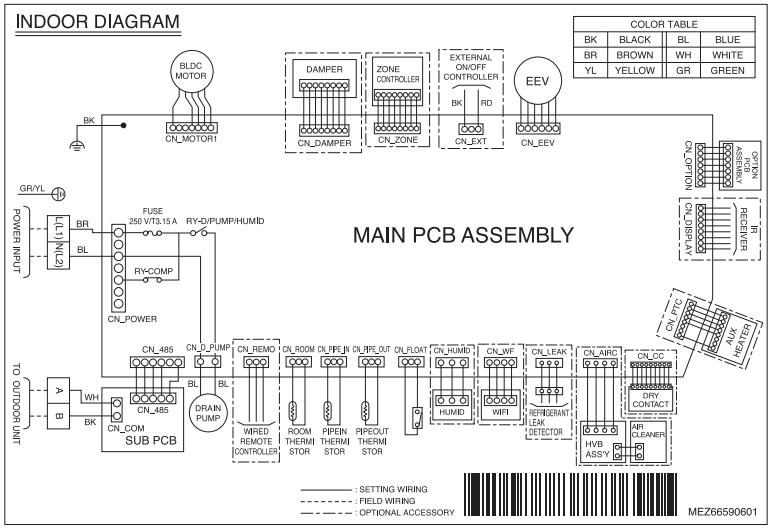

CONNECTOR NUMBER	SPEC.	DESCRIPTION
CN-MOTOR1	Fan motor output	Motor output of BLDC
CN-MOTOR2	Fan motor output	Motor output of BLDC
CN-PIPE_OUT	Discharge pipe sensor	Pipe out thermistor
CN-PIPE_IN	Suction pipe sensor	Pipe in thermistor
CN-ROOM	Room sensor	Room thermistor
CN-REMO	Remote controller	Remote control line
CN-FLOAT	Float switch input	Float switch sensing
CN-EEV	EEV output	EEV control output
CN-D_PUMP	Drain pump output	AC output for drain pump
CN-OPTION	Option PWB.	Communication between main and option
CN-COM	Communication	Communication between indoor and outdoor
CN-POWER	AC power supply	AC power line input for indoor controller
CN-ZONE	Zone Controller	Zone control line
CN-DISPLAY	RF Remote controller	RF remote control line
CN-CC	Dry contact	Dry contact line
CN-EXT	External On/Off	External On/Off signal input

	Function	Description	Setting Off	Setting On	Default
SW1	Communication	N/A (Default)	-	-	Off
SW2	Cycle	N/A (Default)	-	-	Off
SW3	Group Control	Selection of Master or Slave	Master	Slave	Off
SW4	Dry Contact Mode	Selection of Dry Contact Mode	Wired/Wireless remote controller selection of Manual or Auto operation Mode	Auto	Off
SW5	Installation	Fan continuous operation	Continuous operation Removal	-	Off
SW6	Heater linkage	N/A	-	-	Off
SW7	Ventilator linkage	Selection of Ventilator linkage	Linkage Removal	Working	Off
	Vane selection (Console)	Selection of up/down side Vane	Up side + Down side Vane	Up side Vane Only	
	Region selection	Selection tropical region	General model	Tropical model	
SW8	Etc.	Spare	-	-	Off

⚠ C, UTION

For Multi V Models, DIP switch 1, 2, 6, 8 must be set OFF.

5. Wiring Diagrams

L2/L3 Chassis

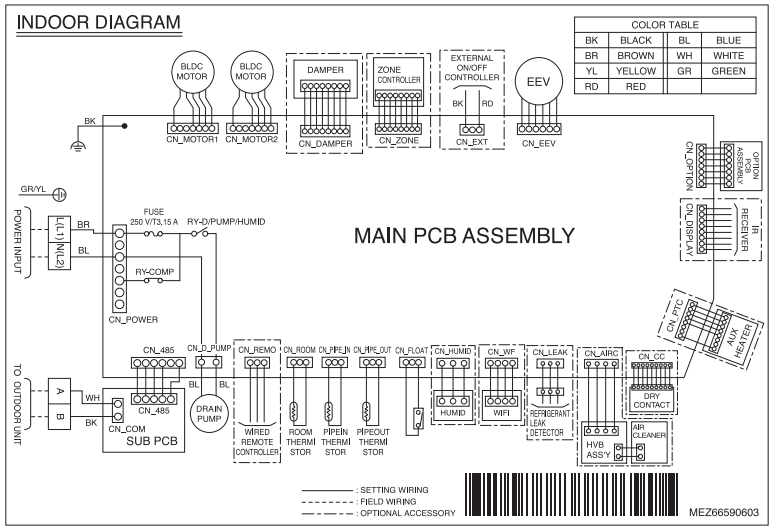

CONNECTOR NUMBER	SPEC.	DESCRIPTION
CN-MOTOR1	Fan motor output	Motor output of BLDC
CN-MOTOR2	Fan motor output	Motor output of BLDC
CN-PIPE_OUT	Discharge pipe sensor	Pipe out thermistor
CN-PIPE_IN	Suction pipe sensor	Pipe in thermistor
CN-ROOM	Room sensor	Room thermistor
CN-REMO	Remote controller	Remote control line
CN-FLOAT	Float switch input	Float switch sensing
CN-EEV	EEV output	EEV control output
CN-D_PUMP	Drain pump output	AC output for drain pump
CN-OPTION	Option PWB.	Communication between main and option
CN-COM	Communication	Communication between indoor and outdoor
CN-POWER	AC power supply	AC power line input for indoor controller
CN-ZONE	Zone Controller	Zone control line
CN-DISPLAY	RF Remote controller	RF remote control line
CN-CC	Dry contact	Dry contact line
CN-EXT	External On/Off	External On/Off signal input

	Function	Description	Setting Off	Setting On	Default
SW1	Communication	N/A (Default)	-	-	Off
SW2	Cycle	N/A (Default)	-	-	Off
SW3	Group Control	Selection of Master or Slave	Master	Slave	Off
SW4	Dry Contact Mode	Selection of Dry Contact Mode	Wired/Wireless remote controller selection of Manual or Auto operation Mode	Auto	Off
SW5	Installation	Fan continuous operation	Continuous operation Removal	-	Off
SW6	Heater linkage	N/A	-	-	Off
SW7	Ventilator linkage	Selection of Ventilator linkage	Linkage Removal	Working	Off
	Vane selection (Console)	Selection of up/down side Vane	Up side + Down side Vane	Up side Vane Only	
	Region selection	Selection tropical region	General model	Tropical model	
SW8	Etc.	Spare	-	-	Off

⚠ C, UTION

For Multi V Models, DIP switch 1, 2, 6, 8 must be set OFF.

6. Capacity Tables

6.1 Cooling Capacity

6.1.1 L1/L2/L3 Chassis

Cooling capacity

Capacity Index	Outdoor air temp. (DB, °C)	Indoor air temp. (DB/WB, °C)													
		20		23		26		27		28		30		32	
		14		16		18		19		20		22		24	
		TC	SHC	TC	SHC	TC	SHC	TC	SHC	TC	SHC	TC	SHC	TC	SHC
		kW	kW	kW	kW	kW	kW	kW	kW	kW	kW	kW	kW	kW	kW
1.6	10	1.1	1.1	1.4	1.3	1.6	1.4	1.7	1.4	1.8	1.5	2.0	1.5	2.2	1.5
	12	1.1	1.1	1.4	1.3	1.6	1.4	1.7	1.4	1.8	1.5	2.0	1.5	2.2	1.5
	14	1.1	1.1	1.4	1.3	1.6	1.4	1.7	1.4	1.8	1.5	2.0	1.5	2.2	1.5
	16	1.1	1.1	1.4	1.3	1.6	1.4	1.7	1.4	1.8	1.5	2.0	1.5	2.2	1.4
	18	1.1	1.1	1.4	1.3	1.6	1.4	1.7	1.4	1.8	1.5	2.0	1.5	2.1	1.4
	20	1.1	1.1	1.4	1.3	1.6	1.4	1.7	1.4	1.8	1.5	2.0	1.5	2.1	1.4
	21	1.1	1.1	1.4	1.3	1.6	1.4	1.7	1.4	1.8	1.5	2.0	1.5	2.1	1.4
	23	1.1	1.1	1.4	1.3	1.6	1.4	1.7	1.4	1.8	1.5	2.0	1.5	2.0	1.4
	25	1.1	1.1	1.4	1.3	1.6	1.4	1.7	1.4	1.8	1.5	2.0	1.5	2.0	1.4
	27	1.1	1.1	1.4	1.3	1.6	1.4	1.7	1.4	1.8	1.5	2.0	1.5	2.0	1.4
	29	1.1	1.1	1.4	1.3	1.6	1.4	1.7	1.4	1.8	1.5	1.9	1.4	2.0	1.3
	31	1.1	1.1	1.4	1.3	1.6	1.4	1.7	1.4	1.8	1.5	1.9	1.4	1.9	1.3
	33	1.1	1.1	1.4	1.3	1.6	1.4	1.7	1.4	1.8	1.5	1.9	1.4	1.9	1.3
	35	1.1	1.1	1.4	1.3	1.6	1.4	1.7	1.4	1.8	1.5	1.8	1.4	1.9	1.3
	37	1.1	1.1	1.4	1.3	1.6	1.4	1.7	1.4	1.8	1.4	1.8	1.4	1.8	1.2
	39	1.1	1.1	1.4	1.3	1.6	1.4	1.7	1.4	1.7	1.4	1.8	1.3	1.8	1.2
2.2	10	1.5	1.4	1.8	1.5	2.0	1.6	2.2	1.7	2.4	1.7	2.6	1.8	2.9	1.8
	12	1.5	1.4	1.8	1.5	2.0	1.6	2.2	1.7	2.4	1.7	2.6	1.8	2.9	1.8
	14	1.5	1.4	1.8	1.5	2.0	1.6	2.2	1.7	2.4	1.7	2.6	1.8	2.8	1.7
	16	1.5	1.4	1.8	1.5	2.0	1.6	2.2	1.7	2.4	1.7	2.6	1.8	2.8	1.7
	18	1.5	1.4	1.8	1.5	2.0	1.6	2.2	1.7	2.4	1.7	2.6	1.8	2.7	1.7
	20	1.5	1.4	1.8	1.5	2.0	1.6	2.2	1.7	2.4	1.7	2.6	1.8	2.7	1.7
	21	1.5	1.4	1.8	1.5	2.0	1.6	2.2	1.7	2.4	1.7	2.6	1.8	2.7	1.7
	23	1.5	1.4	1.8	1.5	2.0	1.6	2.2	1.7	2.4	1.7	2.6	1.8	2.6	1.6
	25	1.5	1.4	1.8	1.5	2.0	1.6	2.2	1.7	2.4	1.7	2.6	1.8	2.6	1.6
	27	1.5	1.4	1.8	1.5	2.0	1.6	2.2	1.7	2.4	1.7	2.5	1.7	2.6	1.6
	29	1.5	1.4	1.8	1.5	2.0	1.6	2.2	1.7	2.4	1.7	2.5	1.7	2.5	1.6
	31	1.5	1.4	1.8	1.5	2.0	1.6	2.2	1.7	2.4	1.7	2.5	1.7	2.5	1.5
	33	1.5	1.4	1.8	1.5	2.0	1.6	2.2	1.7	2.4	1.7	2.4	1.7	2.4	1.5
	35	1.5	1.4	1.8	1.5	2.0	1.6	2.2	1.7	2.4	1.7	2.4	1.6	2.4	1.5
	37	1.5	1.4	1.8	1.5	2.0	1.6	2.2	1.7	2.3	1.7	2.3	1.6	2.4	1.5
	39	1.5	1.4	1.8	1.5	2.0	1.6	2.2	1.7	2.2	1.6	2.3	1.6	2.4	1.4
2.8	10	1.9	1.8	2.2	1.9	2.6	2.1	2.8	2.1	3.0	2.2	3.4	2.3	3.7	2.3
	12	1.9	1.8	2.2	1.9	2.6	2.1	2.8	2.1	3.0	2.2	3.4	2.3	3.6	2.3
	14	1.9	1.8	2.2	1.9	2.6	2.1	2.8	2.1	3.0	2.2	3.4	2.3	3.6	2.2
	16	1.9	1.8	2.2	1.9	2.6	2.1	2.8	2.1	3.0	2.2	3.4	2.3	3.5	2.2
	18	1.9	1.8	2.2	1.9	2.6	2.1	2.8	2.1	3.0	2.2	3.4	2.3	3.5	2.2
	20	1.9	1.8	2.2	1.9	2.6	2.1	2.8	2.1	3.0	2.2	3.4	2.3	3.4	2.1
	21	1.9	1.8	2.2	1.9	2.6	2.1	2.8	2.1	3.0	2.2	3.4	2.3	3.4	2.1
	23	1.9	1.8	2.2	1.9	2.6	2.1	2.8	2.1	3.0	2.2	3.4	2.3	3.4	2.1
	25	1.9	1.8	2.2	1.9	2.6	2.1	2.8	2.1	3.0	2.2	3.3	2.3	3.3	2.0
	27	1.9	1.8	2.2	1.9	2.6	2.1	2.8	2.1	3.0	2.2	3.2	2.2	3.3	2.0
	29	1.9	1.8	2.2	1.9	2.6	2.1	2.8	2.1	3.0	2.2	3.2	2.2	3.2	2.0
	31	1.9	1.8	2.2	1.9	2.6	2.1	2.8	2.1	3.0	2.2	3.2	2.1	3.2	2.0
	33	1.9	1.8	2.2	1.9	2.6	2.1	2.8	2.1	3.0	2.2	3.1	2.1	3.1	1.9
	35	1.9	1.8	2.2	1.9	2.6	2.1	2.8	2.1	3.0	2.2	3.0	2.1	3.1	1.9
	37	1.9	1.8	2.2	1.9	2.6	2.1	2.8	2.1	2.9	2.1	3.0	2.0	3.0	1.9
	39	1.9	1.8	2.2	1.9	2.6	2.1	2.8	2.1	2.8	2.1	2.9	2.0	3.0	1.8

Notes:

TC: Total Capacity(kW) SHC: Sensible Heat Capacity(kW)

1. Capacity tables show the representative value of conditions which may occur.
2. Refer to Capacity Correction Factor in the outdoor unit PDB for the actual performance data of each indoor unit and outdoor unit combination.

6. Capacity Tables

Cooling capacity

Capacity Index	Outdoor air temp. (DB, °C)	Indoor air temp. (DB/WB, °C)													
		20		23		26		27		28		30		32	
		14		16		18		19		20		22		24	
		TC	SHC	TC	SHC	TC	SHC	TC	SHC	TC	SHC	TC	SHC	TC	SHC
		kW	kW	kW	kW	kW	kW	kW	kW	kW	kW	kW	kW	kW	kW
3.6	10	2.4	2.2	2.9	2.4	3.3	2.6	3.6	2.6	3.9	2.7	4.3	2.8	4.7	2.8
	12	2.4	2.2	2.9	2.4	3.3	2.6	3.6	2.6	3.9	2.7	4.3	2.8	4.7	2.8
	14	2.4	2.2	2.9	2.4	3.3	2.6	3.6	2.6	3.9	2.7	4.3	2.8	4.6	2.7
	16	2.4	2.2	2.9	2.4	3.3	2.6	3.6	2.6	3.9	2.7	4.3	2.8	4.6	2.7
	18	2.4	2.2	2.9	2.4	3.3	2.6	3.6	2.6	3.9	2.7	4.3	2.8	4.5	2.7
	20	2.4	2.2	2.9	2.4	3.3	2.6	3.6	2.6	3.9	2.7	4.3	2.8	4.4	2.6
	21	2.4	2.2	2.9	2.4	3.3	2.6	3.6	2.6	3.9	2.7	4.3	2.8	4.4	2.6
	23	2.4	2.2	2.9	2.4	3.3	2.6	3.6	2.6	3.9	2.7	4.3	2.8	4.3	2.6
	25	2.4	2.2	2.9	2.4	3.3	2.6	3.6	2.6	3.9	2.7	4.3	2.8	4.3	2.5
	27	2.4	2.2	2.9	2.4	3.3	2.6	3.6	2.6	3.9	2.7	4.2	2.7	4.2	2.5
	29	2.4	2.2	2.9	2.4	3.3	2.6	3.6	2.6	3.9	2.7	4.1	2.7	4.2	2.5
	31	2.4	2.2	2.9	2.4	3.3	2.6	3.6	2.6	3.9	2.7	4.1	2.6	4.1	2.4
	33	2.4	2.2	2.9	2.4	3.3	2.6	3.6	2.6	3.9	2.7	4.0	2.6	4.0	2.4
	35	2.4	2.2	2.9	2.4	3.3	2.6	3.6	2.6	3.9	2.7	3.9	2.6	4.0	2.4
	37	2.4	2.2	2.9	2.4	3.3	2.6	3.6	2.6	3.8	2.6	3.8	2.5	3.9	2.3
	39	2.4	2.2	2.9	2.4	3.3	2.6	3.6	2.6	3.7	2.6	3.8	2.5	3.9	2.3
4.5	10	3.0	2.7	3.6	3.0	4.2	3.2	4.5	3.3	4.8	3.4	5.4	3.5	5.9	3.5
	12	3.0	2.7	3.6	3.0	4.2	3.2	4.5	3.3	4.8	3.4	5.4	3.5	5.8	3.5
	14	3.0	2.7	3.6	3.0	4.2	3.2	4.5	3.3	4.8	3.4	5.4	3.5	5.8	3.4
	16	3.0	2.7	3.6	3.0	4.2	3.2	4.5	3.3	4.8	3.4	5.4	3.5	5.7	3.3
	18	3.0	2.7	3.6	3.0	4.2	3.2	4.5	3.3	4.8	3.4	5.4	3.5	5.6	3.3
	20	3.0	2.7	3.6	3.0	4.2	3.2	4.5	3.3	4.8	3.4	5.4	3.5	5.5	3.3
	21	3.0	2.7	3.6	3.0	4.2	3.2	4.5	3.3	4.8	3.4	5.4	3.5	5.5	3.3
	23	3.0	2.7	3.6	3.0	4.2	3.2	4.5	3.3	4.8	3.4	5.4	3.5	5.4	3.2
	25	3.0	2.7	3.6	3.0	4.2	3.2	4.5	3.3	4.8	3.4	5.3	3.5	5.3	3.2
	27	3.0	2.7	3.6	3.0	4.2	3.2	4.5	3.3	4.8	3.4	5.2	3.4	5.3	3.2
	29	3.0	2.7	3.6	3.0	4.2	3.2	4.5	3.3	4.8	3.4	5.1	3.3	5.2	3.1
	31	3.0	2.7	3.6	3.0	4.2	3.2	4.5	3.3	4.8	3.4	5.1	3.3	5.1	3.0
	33	3.0	2.7	3.6	3.0	4.2	3.2	4.5	3.3	4.8	3.4	4.9	3.3	5.0	3.0
	35	3.0	2.7	3.6	3.0	4.2	3.2	4.5	3.3	4.8	3.4	4.9	3.2	4.9	3.0
	37	3.0	2.7	3.6	3.0	4.2	3.2	4.5	3.3	4.7	3.3	4.8	3.2	4.9	2.9
	39	3.0	2.7	3.6	3.0	4.2	3.2	4.5	3.3	4.6	3.2	4.7	3.1	4.8	2.8
5.6	10	3.8	3.4	4.5	3.7	5.2	4.0	5.6	4.1	6.0	4.2	6.7	4.4	7.3	4.3
	12	3.8	3.4	4.5	3.7	5.2	4.0	5.6	4.1	6.0	4.2	6.7	4.4	7.3	4.3
	14	3.8	3.4	4.5	3.7	5.2	4.0	5.6	4.1	6.0	4.2	6.7	4.4	7.2	4.2
	16	3.8	3.4	4.5	3.7	5.2	4.0	5.6	4.1	6.0	4.2	6.7	4.4	7.1	4.2
	18	3.8	3.4	4.5	3.7	5.2	4.0	5.6	4.1	6.0	4.2	6.7	4.4	6.9	4.2
	20	3.8	3.4	4.5	3.7	5.2	4.0	5.6	4.1	6.0	4.2	6.7	4.4	6.9	4.1
	21	3.8	3.4	4.5	3.7	5.2	4.0	5.6	4.1	6.0	4.2	6.7	4.4	6.9	4.1
	23	3.8	3.4	4.5	3.7	5.2	4.0	5.6	4.1	6.0	4.2	6.7	4.4	6.7	4.0
	25	3.8	3.4	4.5	3.7	5.2	4.0	5.6	4.1	6.0	4.2	6.6	4.3	6.6	3.9
	27	3.8	3.4	4.5	3.7	5.2	4.0	5.6	4.1	6.0	4.2	6.5	4.2	6.5	3.9
	29	3.8	3.4	4.5	3.7	5.2	4.0	5.6	4.1	6.0	4.2	6.4	4.2	6.5	3.8
	31	3.8	3.4	4.5	3.7	5.2	4.0	5.6	4.1	6.0	4.2	6.3	4.1	6.4	3.8
	33	3.8	3.4	4.5	3.7	5.2	4.0	5.6	4.1	6.0	4.2	6.2	4.1	6.2	3.7
	35	3.8	3.4	4.5	3.7	5.2	4.0	5.6	4.1	6.0	4.2	6.1	4.0	6.2	3.7
	37	3.8	3.4	4.5	3.7	5.2	4.0	5.6	4.1	5.8	4.1	5.9	3.9	6.1	3.6
	39	3.8	3.4	4.5	3.7	5.2	4.0	5.6	4.1	5.7	4.0	5.8	3.8	6.0	3.5

Notes:

TC: Total Capacity(kW) SHC: Sensible Heat Capacity(kW)

1. Capacity tables show the representative value of conditions which may occur.
2. Refer to Capacity Correction Factor in the outdoor unit PDB for the actual performance data of each indoor unit and outdoor unit combination.

6. Capacity Tables

Cooling capacity

Capacity Index	Outdoor air temp. (DB, °C)	Indoor air temp. (DB/WB, °C)													
		20		23		26		27		28		30		32	
		14		16		18		19		20		22		24	
		TC	SHC	TC	SHC	TC	SHC	TC	SHC	TC	SHC	TC	SHC	TC	SHC
		kW	kW	kW	kW	kW	kW	kW	kW	kW	kW	kW	kW	kW	kW
6.2	10	4.2	3.9	5.0	4.3	5.8	4.6	6.2	4.7	6.6	4.9	7.4	5.1	8.1	5.0
	12	4.2	3.9	5.0	4.3	5.8	4.6	6.2	4.7	6.6	4.9	7.4	5.1	8.0	5.0
	14	4.2	3.9	5.0	4.3	5.8	4.6	6.2	4.7	6.6	4.9	7.4	5.1	7.9	4.9
	16	4.2	3.9	5.0	4.3	5.8	4.6	6.2	4.7	6.6	4.9	7.4	5.1	7.9	4.8
	18	4.2	3.9	5.0	4.3	5.8	4.6	6.2	4.7	6.6	4.9	7.4	5.1	7.7	4.8
	20	4.2	3.9	5.0	4.3	5.8	4.6	6.2	4.7	6.6	4.9	7.4	5.1	7.6	4.7
	21	4.2	3.9	5.0	4.3	5.8	4.6	6.2	4.7	6.6	4.9	7.4	5.1	7.6	4.7
	23	4.2	3.9	5.0	4.3	5.8	4.6	6.2	4.7	6.6	4.9	7.4	5.1	7.4	4.6
	25	4.2	3.9	5.0	4.3	5.8	4.6	6.2	4.7	6.6	4.9	7.3	5.0	7.3	4.5
	27	4.2	3.9	5.0	4.3	5.8	4.6	6.2	4.7	6.6	4.9	7.2	4.9	7.2	4.5
	29	4.2	3.9	5.0	4.3	5.8	4.6	6.2	4.7	6.6	4.9	7.1	4.8	7.2	4.4
	31	4.2	3.9	5.0	4.3	5.8	4.6	6.2	4.7	6.6	4.9	7.0	4.7	7.1	4.3
	33	4.2	3.9	5.0	4.3	5.8	4.6	6.2	4.7	6.6	4.9	6.8	4.7	6.9	4.3
	35	4.2	3.9	5.0	4.3	5.8	4.6	6.2	4.7	6.6	4.9	6.7	4.6	6.8	4.3
	37	4.2	3.9	5.0	4.3	5.8	4.6	6.2	4.7	6.5	4.7	6.5	4.5	6.7	4.2
	39	4.2	3.9	5.0	4.3	5.8	4.6	6.2	4.7	6.3	4.6	6.5	4.4	6.6	4.1
7.1	10	4.8	4.4	5.7	4.9	6.6	5.3	7.1	5.4	7.6	5.6	8.5	5.8	9.3	5.7
	12	4.8	4.4	5.7	4.9	6.6	5.3	7.1	5.4	7.6	5.6	8.5	5.8	9.2	5.7
	14	4.8	4.4	5.7	4.9	6.6	5.3	7.1	5.4	7.6	5.6	8.5	5.8	9.1	5.6
	16	4.8	4.4	5.7	4.9	6.6	5.3	7.1	5.4	7.6	5.6	8.5	5.8	9.0	5.5
	18	4.8	4.4	5.7	4.9	6.6	5.3	7.1	5.4	7.6	5.6	8.5	5.8	8.8	5.5
	20	4.8	4.4	5.7	4.9	6.6	5.3	7.1	5.4	7.6	5.6	8.5	5.8	8.7	5.4
	21	4.8	4.4	5.7	4.9	6.6	5.3	7.1	5.4	7.6	5.6	8.5	5.8	8.7	5.4
	23	4.8	4.4	5.7	4.9	6.6	5.3	7.1	5.4	7.6	5.6	8.5	5.8	8.5	5.3
	25	4.8	4.4	5.7	4.9	6.6	5.3	7.1	5.4	7.6	5.6	8.4	5.7	8.4	5.2
	27	4.8	4.4	5.7	4.9	6.6	5.3	7.1	5.4	7.6	5.6	8.2	5.6	8.3	5.2
	29	4.8	4.4	5.7	4.9	6.6	5.3	7.1	5.4	7.6	5.6	8.1	5.5	8.2	5.1
	31	4.8	4.4	5.7	4.9	6.6	5.3	7.1	5.4	7.6	5.6	8.0	5.4	8.1	5.0
	33	4.8	4.4	5.7	4.9	6.6	5.3	7.1	5.4	7.6	5.6	7.8	5.4	7.9	4.9
	35	4.8	4.4	5.7	4.9	6.6	5.3	7.1	5.4	7.6	5.6	7.7	5.3	7.8	4.9
	37	4.8	4.4	5.7	4.9	6.6	5.3	7.1	5.4	7.4	5.4	7.5	5.2	7.7	4.8
	39	4.8	4.4	5.7	4.9	6.6	5.3	7.1	5.4	7.2	5.3	7.4	5.1	7.6	4.7

Notes:

TC: Total Capacity(kW) SHC: Sensible Heat Capacity(kW)

1. Capacity tables show the representative value of conditions which may occur.
2. Refer to Capacity Correction Factor in the outdoor unit PDB for the actual performance data of each indoor unit and outdoor unit combination.

6. Capacity Tables

6.2 Heating Capacity

Heating capacity

Capacity Index	Outdoor air temp.		Indoor air temp. (DB, °C)					
			16	18	20	21	22	24
	DB(°C)	WB(°C)	TC	TC	TC	TC	TC	TC
			kW	kW	kW	kW	kW	kW
1.6	-24.8	-25.0	1.1	1.1	1.1	1.1	1.1	1.1
	-21.8	-22.0	1.3	1.3	1.3	1.3	1.3	1.3
	-19.8	-20.0	1.4	1.4	1.4	1.4	1.4	1.4
	-18.8	-19.0	1.4	1.4	1.4	1.4	1.4	1.4
	-16.7	-17.0	1.5	1.5	1.5	1.5	1.5	1.5
	-14.7	-15.0	1.6	1.6	1.6	1.6	1.6	1.6
	-12.6	-13.0	1.6	1.6	1.6	1.6	1.6	1.6
	-10.5	-11.0	1.7	1.7	1.7	1.7	1.7	1.7
	-9.5	-10.0	1.8	1.8	1.7	1.7	1.7	1.7
	-8.5	-9.1	1.8	1.8	1.8	1.8	1.8	1.7
	-7.0	-7.6	1.8	1.8	1.8	1.8	1.8	1.7
	-5.0	-5.6	1.9	1.9	1.9	1.8	1.8	1.7
	-3.0	-3.7	2.0	1.9	1.9	1.8	1.8	1.7
	0.0	-0.7	2.0	2.0	1.9	1.8	1.8	1.7
	3.0	2.2	2.1	2.0	1.9	1.8	1.8	1.7
	5.0	4.1	2.1	2.0	1.9	1.8	1.8	1.7
	7.0	6.0	2.1	2.0	1.9	1.8	1.8	1.7
	9.0	7.9	2.1	2.0	1.9	1.8	1.8	1.7
	11.0	9.8	2.1	2.0	1.9	1.8	1.8	1.7
	13.0	11.8	2.1	2.0	1.9	1.8	1.8	1.7
	15.0	13.7	2.1	2.0	1.9	1.8	1.8	1.7
2.2	-24.8	-25.0	1.4	1.4	1.4	1.4	1.4	1.4
	-21.8	-22.0	1.7	1.7	1.7	1.7	1.7	1.7
	-19.8	-20.0	1.8	1.8	1.8	1.8	1.8	1.8
	-18.8	-19.0	1.9	1.9	1.9	1.9	1.9	1.9
	-16.7	-17.0	2.0	2.0	2.0	2.0	2.0	2.0
	-14.7	-15.0	2.1	2.1	2.1	2.1	2.1	2.0
	-12.6	-13.0	2.2	2.2	2.2	2.2	2.1	2.1
	-10.5	-11.0	2.3	2.3	2.2	2.2	2.2	2.2
	-9.5	-10.0	2.3	2.3	2.3	2.3	2.3	2.2
	-8.5	-9.1	2.3	2.3	2.3	2.3	2.3	2.2
	-7.0	-7.6	2.4	2.4	2.4	2.4	2.3	2.2
	-5.0	-5.6	2.5	2.5	2.5	2.4	2.3	2.2
	-3.0	-3.7	2.6	2.6	2.5	2.4	2.3	2.2
	0.0	-0.7	2.7	2.6	2.5	2.4	2.3	2.2
	3.0	2.2	2.7	2.7	2.5	2.4	2.3	2.2
	5.0	4.1	2.8	2.7	2.5	2.4	2.3	2.2
	7.0	6.0	2.8	2.7	2.5	2.4	2.3	2.2
	9.0	7.9	2.8	2.7	2.5	2.4	2.3	2.2
	11.0	9.8	2.8	2.7	2.5	2.4	2.3	2.2
	13.0	11.8	2.8	2.7	2.5	2.4	2.3	2.2
	15.0	13.7	2.8	2.7	2.5	2.4	2.3	2.2
2.8	-24.8	-25.0	1.9	1.9	1.8	1.8	1.8	1.8
	-21.8	-22.0	2.2	2.2	2.2	2.2	2.2	2.2
	-19.8	-20.0	2.4	2.4	2.3	2.3	2.3	2.3
	-18.8	-19.0	2.4	2.4	2.4	2.4	2.4	2.4
	-16.7	-17.0	2.5	2.5	2.5	2.5	2.5	2.5
	-14.7	-15.0	2.7	2.7	2.6	2.6	2.6	2.6
	-12.6	-13.0	2.8	2.8	2.8	2.8	2.7	2.7
	-10.5	-11.0	2.9	2.9	2.9	2.9	2.9	2.8
	-9.5	-10.0	3.0	3.0	2.9	2.9	2.9	2.8
	-8.5	-9.1	3.0	3.0	3.0	3.0	3.0	2.8
	-7.0	-7.6	3.1	3.1	3.1	3.1	3.0	2.8
	-5.0	-5.6	3.2	3.2	3.2	3.1	3.0	2.8
	-3.0	-3.7	3.4	3.3	3.2	3.1	3.0	2.8
	0.0	-0.7	3.4	3.3	3.2	3.1	3.0	2.8
	3.0	2.2	3.5	3.4	3.2	3.1	3.0	2.8
	5.0	4.1	3.6	3.4	3.2	3.1	3.0	2.8
	7.0	6.0	3.6	3.4	3.2	3.1	3.0	2.8
	9.0	7.9	3.6	3.4	3.2	3.1	3.0	2.8
	11.0	9.8	3.6	3.4	3.2	3.1	3.0	2.8
	13.0	11.8	3.6	3.4	3.2	3.1	3.0	2.8
	15.0	13.7	3.6	3.4	3.2	3.1	3.0	2.8

Notes:

TC: Total Capacity(kW)

1. Capacity tables show the representative value of conditions which may occur.
2. is shown as reference. When selecting the outdoor units, avoid the outdoor air temperature range shown by .
3. In accordance with operation limits of outdoor unit, applicable range of capacity tables is different.
4. Refer to Capacity Correction Factor in the outdoor unit PDB for the actual performance data of each indoor unit and outdoor unit combination.

6. Capacity Tables

Heating capacity

Capacity Index	Outdoor air temp.		Indoor air temp. (DB, °C)					
			16	18	20	21	22	24
	DB(°C)	WB(°C)	TC	TC	TC	TC	TC	TC
			kW	kW	kW	kW	kW	kW
3.6	-24.8	-25.0	2.3	2.3	2.3	2.3	2.3	2.3
	-21.8	-22.0	2.8	2.8	2.8	2.8	2.8	2.8
	-19.8	-20.0	2.9	2.9	2.9	2.9	2.9	2.9
	-18.8	-19.0	3.0	3.0	3.0	3.0	3.0	3.0
	-16.7	-17.0	3.1	3.1	3.1	3.1	3.1	3.1
	-14.7	-15.0	3.3	3.3	3.3	3.3	3.3	3.3
	-12.6	-13.0	3.5	3.4	3.4	3.4	3.4	3.4
	-10.5	-11.0	3.6	3.6	3.6	3.6	3.6	3.5
	-9.5	-10.0	3.7	3.7	3.7	3.7	3.7	3.5
	-8.5	-9.1	3.8	3.8	3.7	3.7	3.7	3.5
	-7.0	-7.6	3.9	3.9	3.9	3.8	3.7	3.5
	-5.0	-5.6	4.0	4.0	4.0	3.9	3.7	3.5
	-3.0	-3.7	4.2	4.1	4.0	3.9	3.7	3.5
	0.0	-0.7	4.3	4.1	4.0	3.9	3.7	3.5
	3.0	2.2	4.4	4.3	4.0	3.9	3.7	3.5
	5.0	4.1	4.5	4.3	4.0	3.9	3.7	3.5
	7.0	6.0	4.5	4.3	4.0	3.9	3.7	3.5
	9.0	7.9	4.5	4.3	4.0	3.9	3.7	3.5
	11.0	9.8	4.5	4.3	4.0	3.9	3.7	3.5
	13.0	11.8	4.5	4.3	4.0	3.9	3.7	3.5
	15.0	13.7	4.5	4.3	4.0	3.9	3.7	3.5
4.5	-24.8	-25.0	2.9	2.9	2.9	2.9	2.9	2.9
	-21.8	-22.0	3.5	3.5	3.5	3.5	3.5	3.5
	-19.8	-20.0	3.7	3.7	3.7	3.7	3.7	3.6
	-18.8	-19.0	3.8	3.7	3.7	3.7	3.7	3.7
	-16.7	-17.0	3.9	3.9	3.9	3.9	3.9	3.9
	-14.7	-15.0	4.1	4.1	4.1	4.1	4.1	4.1
	-12.6	-13.0	4.3	4.3	4.3	4.3	4.3	4.3
	-10.5	-11.0	4.5	4.5	4.5	4.5	4.5	4.4
	-9.5	-10.0	4.6	4.6	4.6	4.6	4.6	4.4
	-8.5	-9.1	4.7	4.7	4.7	4.7	4.7	4.4
	-7.0	-7.6	4.8	4.8	4.8	4.8	4.7	4.4
	-5.0	-5.6	5.0	5.0	5.0	4.8	4.7	4.4
	-3.0	-3.7	5.3	5.1	5.0	4.8	4.7	4.4
	0.0	-0.7	5.3	5.2	5.0	4.8	4.7	4.4
	3.0	2.2	5.5	5.3	5.0	4.8	4.7	4.4
	5.0	4.1	5.6	5.3	5.0	4.8	4.7	4.4
	7.0	6.0	5.6	5.3	5.0	4.8	4.7	4.4
	9.0	7.9	5.6	5.3	5.0	4.8	4.7	4.4
	11.0	9.8	5.6	5.3	5.0	4.8	4.7	4.4
	13.0	11.8	5.6	5.3	5.0	4.8	4.7	4.4
	15.0	13.7	5.6	5.3	5.0	4.8	4.7	4.4
5.6	-24.8	-25.0	3.6	3.6	3.6	3.6	3.6	3.6
	-21.8	-22.0	4.4	4.4	4.4	4.4	4.4	4.4
	-19.8	-20.0	4.6	4.6	4.6	4.6	4.6	4.6
	-18.8	-19.0	4.8	4.7	4.7	4.7	4.7	4.7
	-16.7	-17.0	5.0	5.0	5.0	4.9	4.9	4.9
	-14.7	-15.0	5.2	5.2	5.2	5.2	5.2	5.2
	-12.6	-13.0	5.5	5.4	5.4	5.4	5.4	5.4
	-10.5	-11.0	5.7	5.7	5.7	5.7	5.7	5.5
	-9.5	-10.0	5.8	5.8	5.8	5.8	5.8	5.5
	-8.5	-9.1	5.9	5.9	5.9	5.9	5.9	5.5
	-7.0	-7.6	6.1	6.1	6.1	6.0	5.9	5.5
	-5.0	-5.6	6.3	6.3	6.3	6.1	5.9	5.5
	-3.0	-3.7	6.6	6.5	6.3	6.1	5.9	5.5
	0.0	-0.7	6.7	6.5	6.3	6.1	5.9	5.5
	3.0	2.2	6.9	6.7	6.3	6.1	5.9	5.5
	5.0	4.1	7.0	6.7	6.3	6.1	5.9	5.5
	7.0	6.0	7.1	6.7	6.3	6.1	5.9	5.5
	9.0	7.9	7.1	6.7	6.3	6.1	5.9	5.5
	11.0	9.8	7.1	6.7	6.3	6.1	5.9	5.5
	13.0	11.8	7.1	6.7	6.3	6.1	5.9	5.5
	15.0	13.7	7.1	6.7	6.3	6.1	5.9	5.5

Notes:

TC: Total Capacity(kW)

1. Capacity tables show the representative value of conditions which may occur.
2. is shown as reference. When selecting the outdoor units, avoid the outdoor air temperature range shown by .
3. In accordance with operation limits of outdoor unit, applicable range of capacity tables is different.
4. Refer to Capacity Correction Factor in the outdoor unit PDB for the actual performance data of each indoor unit and outdoor unit combination.

6. Capacity Tables

Heating capacity

Capacity Index	Outdoor air temp.		Indoor air temp. (DB, °C)					
			16	18	20	21	22	24
	DB(°C)	WB(°C)	TC	TC	TC	TC	TC	TC
			kW	kW	kW	kW	kW	kW
6.2	-24.8	-25.0	4.1	4.1	4.0	4.0	4.0	4.0
	-21.8	-22.0	4.9	4.9	4.9	4.9	4.9	4.8
	-19.8	-20.0	5.2	5.2	5.1	5.1	5.1	5.1
	-18.8	-19.0	5.3	5.2	5.2	5.2	5.2	5.2
	-16.7	-17.0	5.5	5.5	5.5	5.5	5.5	5.5
	-14.7	-15.0	5.8	5.8	5.8	5.8	5.8	5.7
	-12.6	-13.0	6.1	6.0	6.0	6.0	6.0	6.0
	-10.5	-11.0	6.3	6.3	6.3	6.3	6.3	6.1
	-9.5	-10.0	6.5	6.5	6.4	6.4	6.4	6.1
	-8.5	-9.1	6.6	6.6	6.5	6.5	6.5	6.1
	-7.0	-7.6	6.8	6.7	6.7	6.7	6.6	6.1
	-5.0	-5.6	7.0	7.0	7.0	6.8	6.6	6.1
	-3.0	-3.7	7.4	7.2	7.0	6.8	6.6	6.1
	0.0	-0.7	7.5	7.2	7.0	6.8	6.6	6.1
	3.0	2.2	7.7	7.4	7.0	6.8	6.6	6.1
	5.0	4.1	7.8	7.4	7.0	6.8	6.6	6.1
	7.0	6.0	7.9	7.4	7.0	6.8	6.6	6.1
	9.0	7.9	7.9	7.4	7.0	6.8	6.6	6.1
	11.0	9.8	7.9	7.4	7.0	6.8	6.6	6.1
	13.0	11.8	7.9	7.4	7.0	6.8	6.6	6.1
	15.0	13.7	7.9	7.4	7.0	6.8	6.6	6.1
7.1	-24.8	-25.0	4.6	4.6	4.6	4.6	4.6	4.6
	-21.8	-22.0	5.6	5.6	5.6	5.6	5.6	5.5
	-19.8	-20.0	5.9	5.9	5.9	5.9	5.9	5.8
	-18.8	-19.0	6.0	6.0	6.0	6.0	6.0	6.0
	-16.7	-17.0	6.3	6.3	6.3	6.3	6.3	6.3
	-14.7	-15.0	6.6	6.6	6.6	6.6	6.6	6.6
	-12.6	-13.0	6.9	6.9	6.9	6.9	6.9	6.9
	-10.5	-11.0	7.2	7.2	7.2	7.2	7.2	7.0
	-9.5	-10.0	7.4	7.4	7.3	7.3	7.3	7.0
	-8.5	-9.1	7.5	7.5	7.5	7.5	7.5	7.0
	-7.0	-7.6	7.7	7.7	7.7	7.7	7.5	7.0
	-5.0	-5.6	8.0	8.0	8.0	7.7	7.5	7.0
	-3.0	-3.7	8.4	8.2	8.0	7.7	7.5	7.0
	0.0	-0.7	8.6	8.3	8.0	7.7	7.5	7.0
	3.0	2.2	8.8	8.5	8.0	7.7	7.5	7.0
	5.0	4.1	8.9	8.5	8.0	7.7	7.5	7.0
	7.0	6.0	9.0	8.5	8.0	7.7	7.5	7.0
	9.0	7.9	9.0	8.5	8.0	7.7	7.5	7.0
	11.0	9.8	9.0	8.5	8.0	7.7	7.5	7.0
	13.0	11.8	9.0	8.5	8.0	7.7	7.5	7.0
	15.0	13.7	9.0	8.5	8.0	7.7	7.5	7.0

Notes:

TC: Total Capacity(kW)

1. Capacity tables show the representative value of conditions which may occur.
2. is shown as reference. When selecting the outdoor units, avoid the outdoor air temperature range shown by .
3. In accordance with operation limits of outdoor unit, applicable range of capacity tables is different.
4. Refer to Capacity Correction Factor in the outdoor unit PDB for the actual performance data of each indoor unit and outdoor unit combination.

7. External Static Pressure (E.S.P) & Air Flow

ARNU05GL1G4, ARNU07GL1G4, ARNU09GL1G4

(Unit : CMM)

Setting Value	Static Pressure(mmAq(Pa))					
	0 (0)	1 (10)	2 (20)	3 (29)	4 (39)	5 (49)
60	-	-	-	-	-	-
65	5.03	-	-	-	-	-
70	5.60	4.85	-	-	-	-
75	6.19	5.44	4.57	-	-	-
80	6.79	6.05	5.17	-	-	-
85	7.41	6.67	5.80	4.80	-	-
90	8.05	7.31	6.43	5.44	-	-
95	8.71	7.96	7.09	6.09	4.97	-
100	9.38	8.63	7.76	6.76	5.64	-
105	10.07	9.32	8.45	7.45	6.33	5.08
110	-	10.03	9.16	8.16	7.04	5.79
115	-	-	9.88	8.88	7.76	6.51
120	-	-	-	9.62	8.50	7.25
125	-	-	-	10.38	9.26	8.01
130	-	-	-	-	10.03	8.78

Note :

1. The above table shows the correlation between the air rates and E.S.P.

Fan Performance

ARNU05GL1G4, ARNU07GL1G4, ARNU09GL1G4

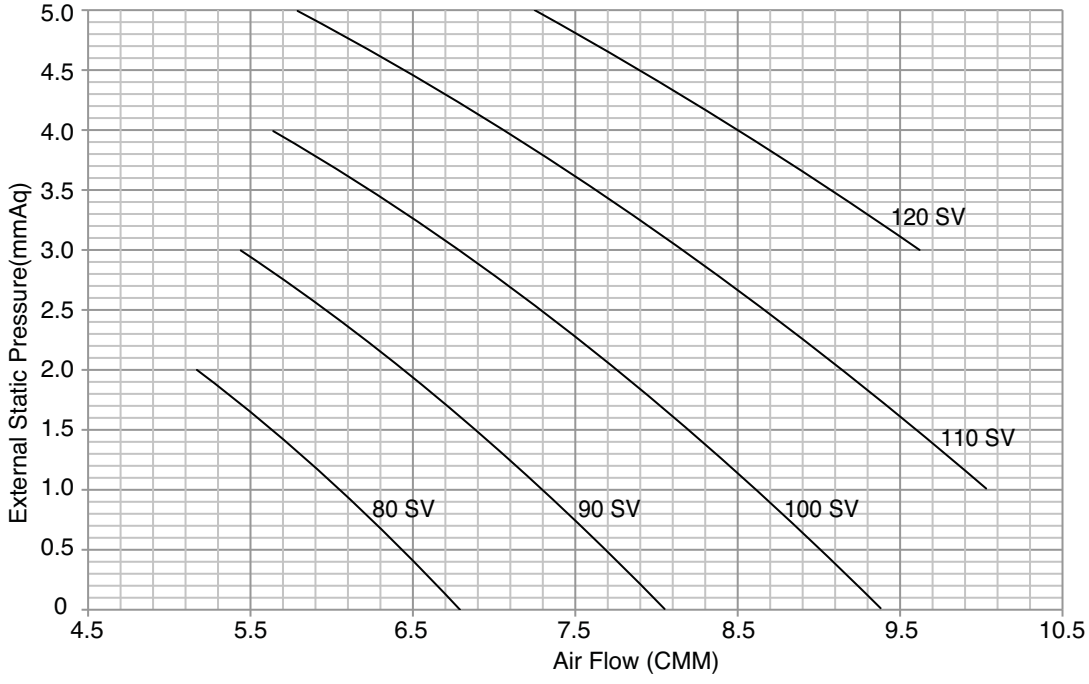

7. External Static Pressure (E.S.P) & Air Flow

ARNU12GL2G4, ARNU15GL2G4, ARNU18GL2G4

(Unit : CMM)

Setting Value	Static Pressure(mmAq(Pa))					
	0 (0)	1 (10)	2 (20)	3 (29)	4 (39)	5 (49)
75	6.50	-	-	-	-	-
80	7.34	6.70	-	-	-	-
85	8.20	7.55	6.69	-	-	-
90	9.07	8.43	7.56	6.47	-	-
95	9.96	9.32	8.45	7.36	-	-
100	10.87	10.22	9.36	8.27	6.96	-
105	11.79	11.15	10.28	9.19	7.89	6.35
110	12.73	12.09	11.22	10.14	8.83	7.30
115	13.69	13.05	12.18	11.09	9.78	8.25
120	14.67	14.02	13.16	12.07	10.76	9.23
125	15.66	15.01	14.15	13.06	11.75	10.22
130	16.67	16.02	15.16	14.07	12.76	11.23
135	-	-	16.18	15.10	13.79	12.26

Note :

1. The above table shows the correlation between the air rates and E.S.P.

Fan Performance

ARNU12GL2G4, ARNU15GL2G4, ARNU18GL2G4

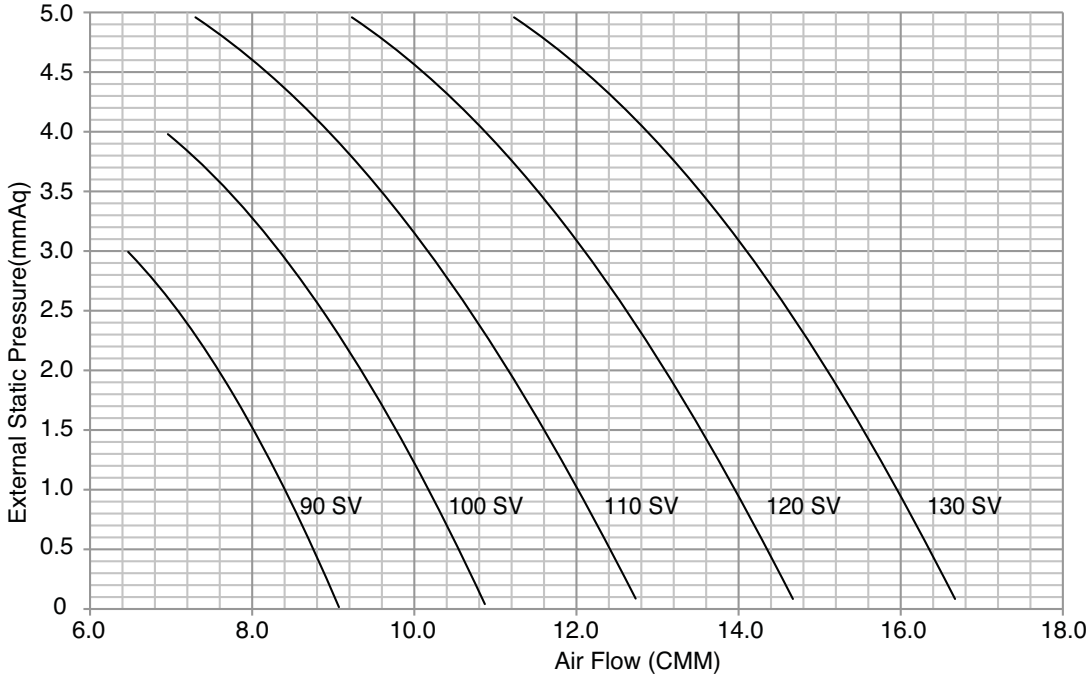

7. External Static Pressure (E.S.P) & Air Flow

ARNU21GL3G4, ARNU24GL3G4

(Unit : CMM)

Setting Value	Static Pressure(mmAq(Pa))					
	0 (0)	1 (10)	2 (20)	3 (29)	4 (39)	5 (49)
85	10.19	-	-	-	-	-
90	12.18	10.71	11.09	-	-	-
95	13.81	12.34	12.19	-	-	-
100	15.16	13.69	13.38	10.71	-	-
105	16.30	14.83	14.36	11.85	-	-
110	17.31	15.85	15.23	12.86	10.97	-
115	18.27	16.80	16.07	13.82	11.93	-
120	19.26	17.79	16.93	14.80	12.91	10.49
125	20.34	18.87	17.89	15.88	13.99	11.57
130	21.60	20.13	19.01	17.14	15.25	12.83
135	-	21.64	20.36	18.66	16.76	14.35
139	-	-	21.08	19.05	17.34	15.29

Note :

1. The above table shows the correlation between the air rates and E.S.P.

Fan Performance

ARNU21GL3G4, ARNU24GL3G4

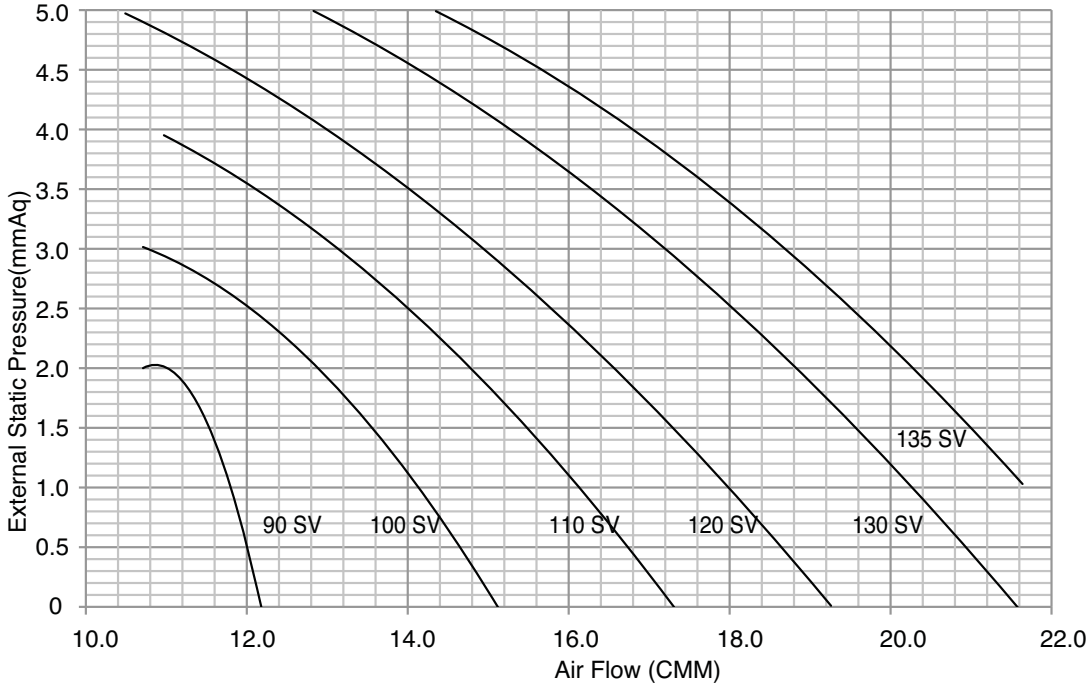

7. External Static Pressure (E.S.P) & Air Flow

ARNU05GL1G4, ARNU07GL1G4, ARNU09GL1G4

Capacity	Mode		Set value	Standard ESP(mmAq(Pa))	CMM	Lower Limit of External Static Pressure(mmAq(Pa))	Upper Limit of External Static Pressure(mmAq(Pa))
5k	High (factory set)	HI	96	2.54 (25)	6.7	-	5(49)
		Mid	91		6.2		
		Low	86		5.5		
	Standard	HI	79	0 (0)	6.7	-	5(49)
		Mid	74		6.2		
		Low	69		5.5		
7k	High (factory set)	HI	100	2.54 (25)	7.5	-	5(49)
		Mid	93		6.5		
		Low	86		5.5		
	Standard	HI	86	0 (0)	7.5	-	5(49)
		Mid	78		6.5		
		Low	69		5.5		
9k	High (factory set)	HI	113	2.54 (25)	9.0	-	5(49)
		Mid	97		7.0		
		Low	86		5.5		
	Standard	HI	97	0 (0)	9.0	-	5(49)
		Mid	81		7.0		
		Low	69		5.5		

ARNU12GL2G4, ARNU15GL2G4, ARNU18GL2G4

Capacity	Mode		Set value	Standard ESP(mmAq(Pa))	CMM	Lower Limit of External Static Pressure(mmAq(Pa))	Upper Limit of External Static Pressure(mmAq(Pa))
12k	High (factory set)	HI	105	2.54 (25)	10.0	-	5(49)
		Mid	96		8.5		
		Low	89		7.0		
	Standard	HI	96	0 (0)	10.0	-	5(49)
		Mid	87		8.5		
		Low	78		7.0		
15k	High (factory set)	HI	119	2.54 (25)	12.5	-	5(49)
		Mid	105		10.0		
		Low	96		8.5		
	Standard	HI	109	0 (0)	12.5	-	5(49)
		Mid	96		10.0		
		Low	87		8.5		
18k	High (factory set)	HI	131	2.54 (25)	15.0	-	5(49)
		Mid	119		12.5		
		Low	105		10.0		
	Standard	HI	120	0 (0)	15.0	-	5(49)
		Mid	109		12.5		
		Low	96		10.0		

7. External Static Pressure (E.S.P) & Air Flow

ARNU21GL3G4, ARNU24GL3G4

Capacity	Mode		Set value	Standard ESP(mmAq(Pa))	CMM	Lower Limit of External Static Pressure(mmAq(Pa))	Upper Limit of External Static Pressure(mmAq(Pa))
21k	High (factory set)	HI	125	2.54 (25)	17.5	-	5(49)
		Mid	110		14.0		
		Low	105		12.0		
	Standard	HI	113	0 (0)	17.5	-	5(49)
		Mid	95		14.0		
		Low	89		12.0		
24k	High (factory set)	HI	139	2.54 (25)	20.0	-	5(49)
		Mid	118		16.0		
		Low	105		12.0		
	Standard	HI	125	0 (0)	20.0	-	5(49)
		Mid	102		16.0		
		Low	89		12.0		

8. Electric Characteristics

Units					Power Supply		IFM		Input(W)	
Model	Type	Hz	Volts	Voltage Range	MCA	MFA	kW	FLA	Cooling	Heating
ARNU05GL1G4	L1	50	220-240	Max:264 Min:198	0.50	15	0.019	0.40	40	40
ARNU07GL1G4	L1				0.50	15	0.019	0.40	40	40
ARNU09GL1G4	L1				0.50	15	0.019	0.40	40	40
ARNU12GL2G4	L2				1.00	15	0.024	0.76	85	85
ARNU15GL2G4	L2				1.00	15	0.024	0.76	85	85
ARNU18GL2G4	L2				1.00	15	0.024	0.76	85	85
ARNU21GL3G4	L3				1.20	15	0.038	0.97	115	115
ARNU24GL3G4	L3				1.20	15	0.038	0.97	115	115
ARNU05GL1G4	L1	60	220	Max:242 Min:198	0.50	15	0.019	0.40	40	40
ARNU07GL1G4	L1				0.50	15	0.019	0.40	40	40
ARNU09GL1G4	L1				0.50	15	0.019	0.40	40	40
ARNU12GL2G4	L2				1.00	15	0.024	0.76	85	85
ARNU15GL2G4	L2				1.00	15	0.024	0.76	85	85
ARNU18GL2G4	L2				1.00	15	0.024	0.76	85	85
ARNU21GL3G4	L3				1.20	15	0.038	0.97	115	115
ARNU24GL3G4	L3				1.20	15	0.038	0.97	115	115

Symbols:

MCA : Min, Circuit Amps(A)
MFA : Max. Fuse Amps(see note 5)
kW : Fan Motor Rated Output(kW)
FLA : Full Load Amps(A)
IFM : Indoor Fan Motor

Note :

1. Voltage range
   Units are suitable for use on electrical systems where voltage supplied to unit terminals is not below or above the listed range limits,
2. Maximum allowable voltage unbalance between phases is 2%
3. MCA/MFA
   MCA=1.25 x FLA
   MFA≤ 4 x FLA
   (Next lower standard fuse rating. Min. 15A)
4. Select wire size based on the MCA
5. Instead of fuse, use Circuit Breaker.

9. Sound Levels

9.1 Sound Pressure Levels

Overall

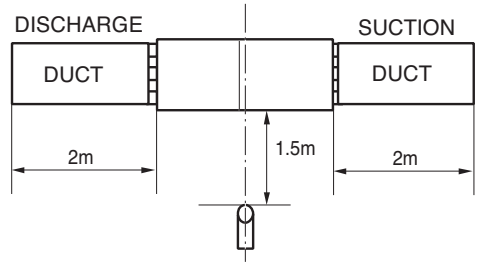

❊ Measuring place : Anechoic chamber

Notes:
1. Sound measured at 1.5m away from the center of the unit
2. Operating condition
   - Power source : 220-240V 50Hz / 220V 60Hz
   - Cooling : Indoor temperature (27°C DB, 19°C WB), Outdoor temperature (35°C DB, 24°C WB)
   - Heating : Indoor temperature (20°C DB, 15°C WB), Outdoor temperature (7°C DB, 6°C WB)
3. Reference accoustic pressure 0dB = 20μPa
4. Sound level will vary depending on a range of factors such as the construction(acoustic absorption coefficient) of particular room in which the equipment in installed.

Model	Sound Pressure Levels (dB(A),H-M-L)		
	External Static Pressure (Pa)		
	10	20	50
ARNU05GL1G4	24-22-21	25-24-22	29-28-27
ARNU07GL1G4	25-22-21	26-24-22	31-29-27
ARNU09GL1G4	27-24-21	28-25-22	32-30-27
ARNU12GL2G4	28-26-24	30-27-25	34-32-30
ARNU15GL2G4	32-28-26	33-30-28	36-34-32
ARNU18GL2G4	34-31-28	35-32-29	38-36-34
ARNU21GL3G4	33-28-27	35-29-28	38-36-34
ARNU24GL3G4	35-32-27	36-33-28	39-36-34

9.1.1 Sound Pressure Level (10Pa)

ARNU05GL1G4

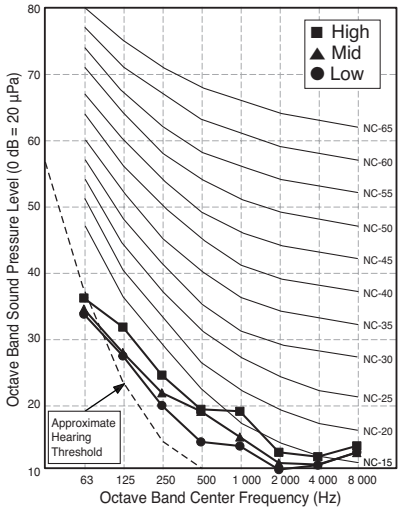

ARNU07GL1G4

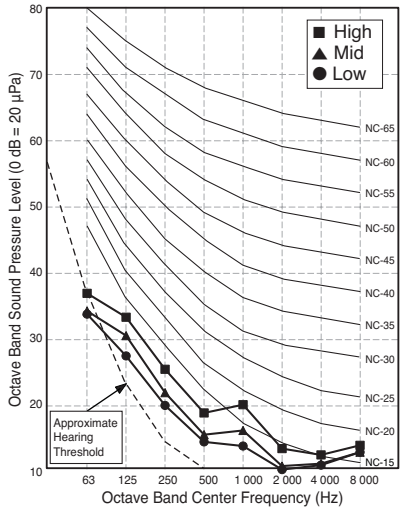

ARNU09GL1G4

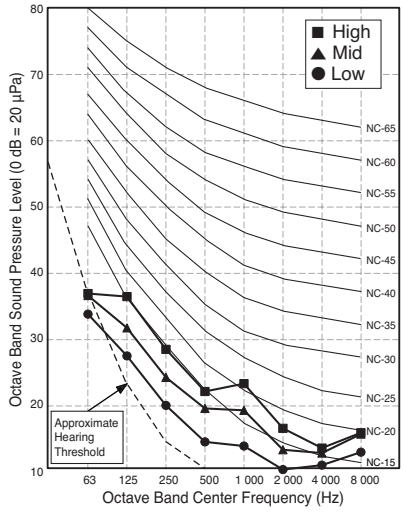

9. Sound Levels

ARNU12GL2G4

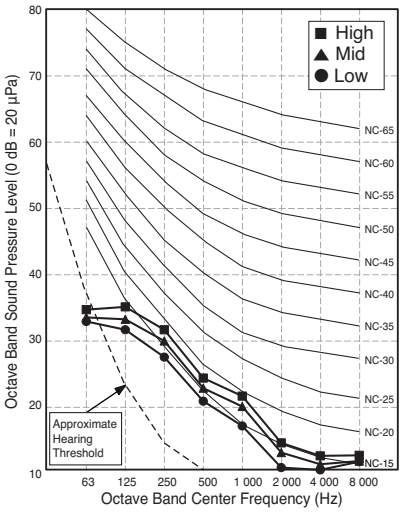

ARNU15GL2G4

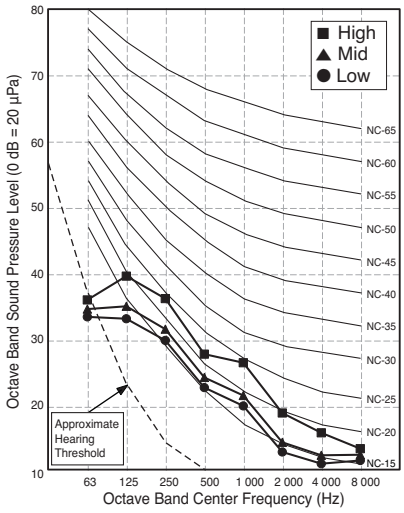

ARNU18GL2G4

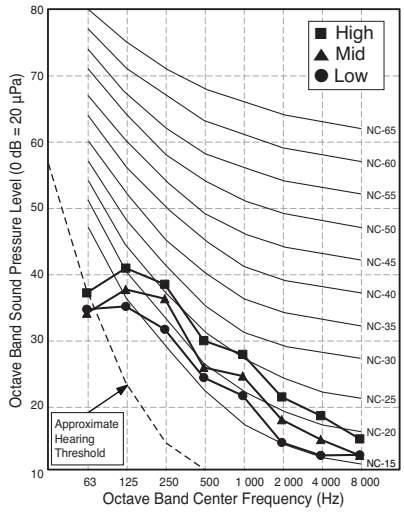

ARNU21GL3G4

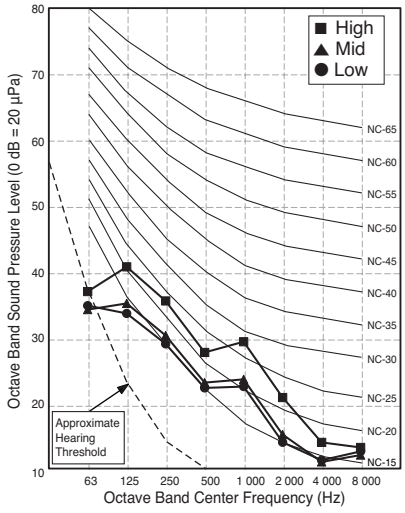

ARNU24GL3G4

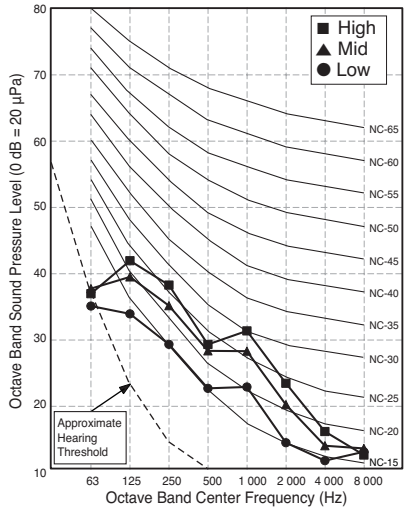

9.1.2 Sound Pressure Level (20Pa)

ARNU05GL1G4

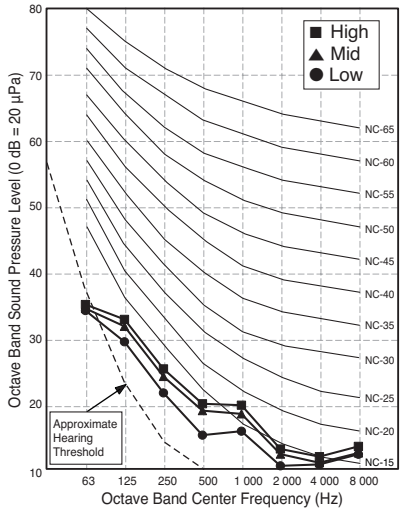

ARNU07GL1G4

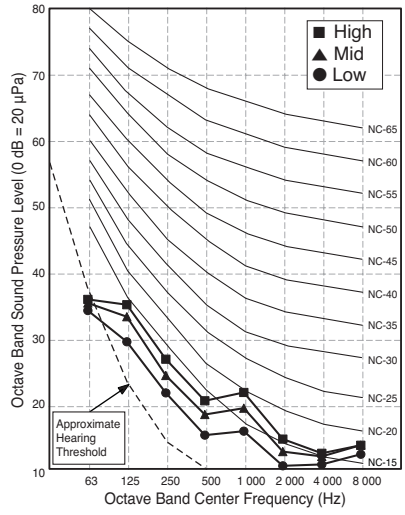

ARNU09GL1G4

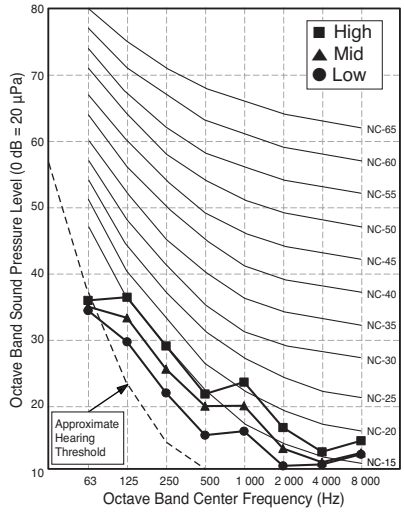

9. Sound Levels

ARNU12GL2G4

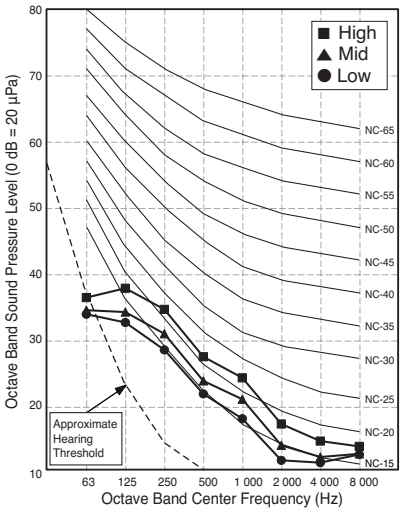

ARNU15GL2G4

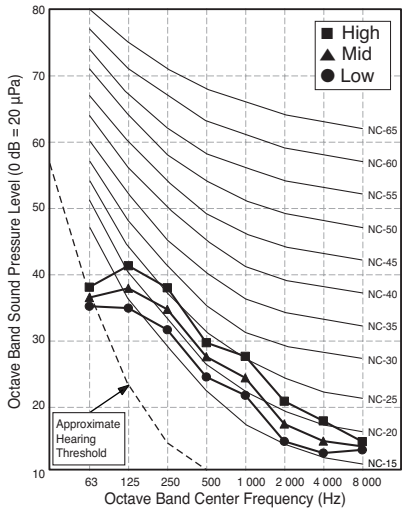

ARNU18GL2G4

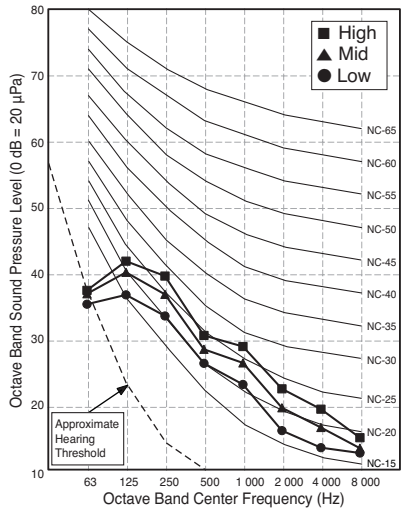

ARNU21GL3G4

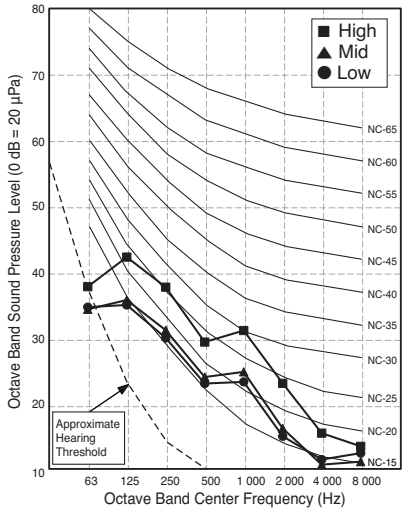

ARNU24GL3G4

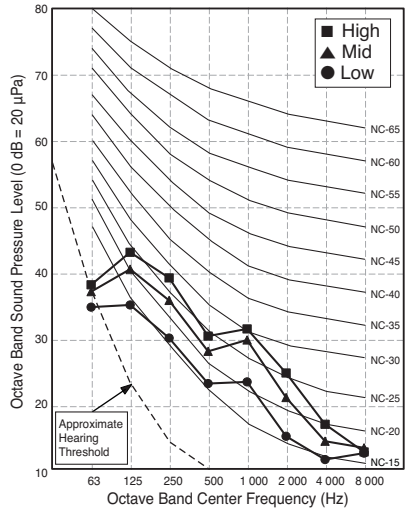

9.1.3 Sound Pressure Level (50Pa)

ARNU05GL1G4

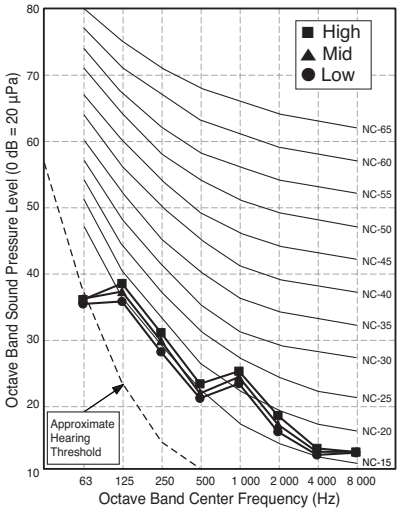

ARNU07GL1G4

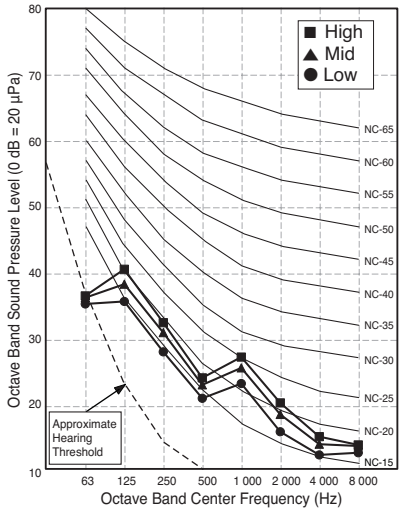

ARNU09GL1G4

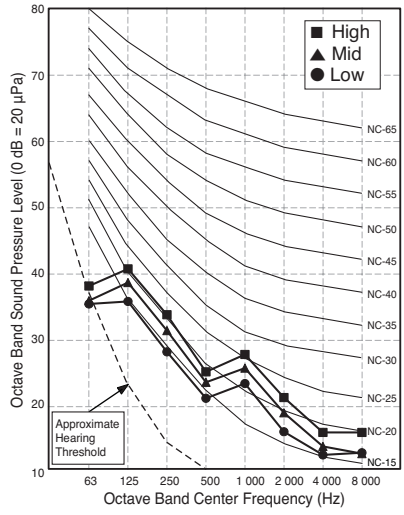

9. Sound Levels

ARNU12GL2G4

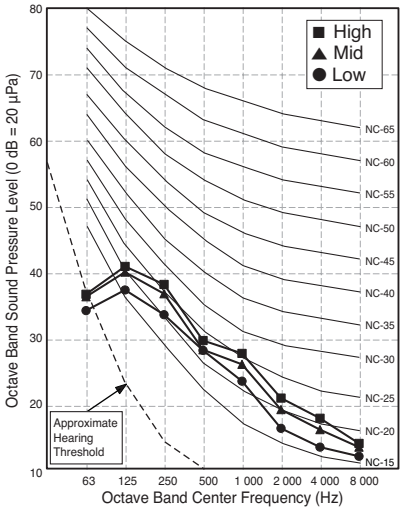

ARNU15GL2G4

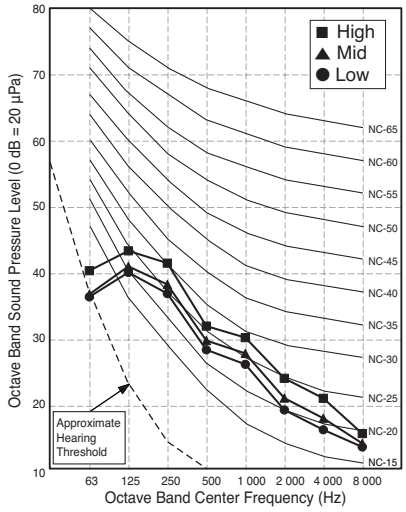

ARNU18GL2G4

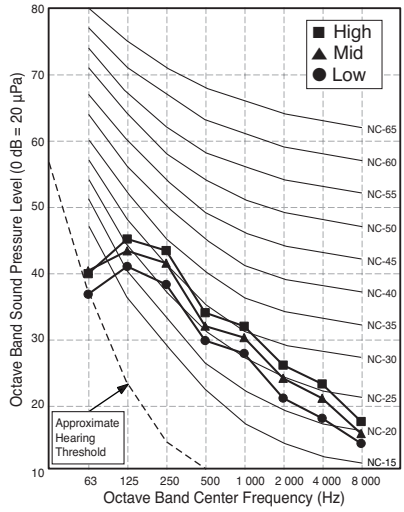

ARNU21GL3G4

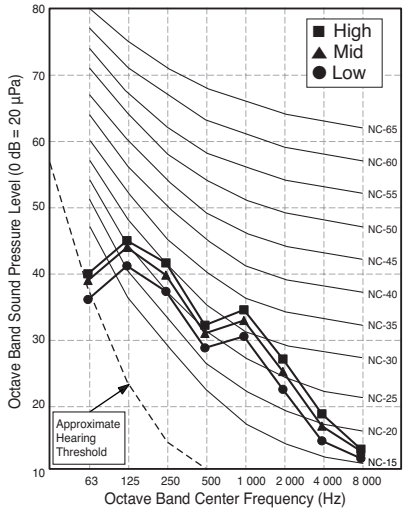

ARNU24GL3G4

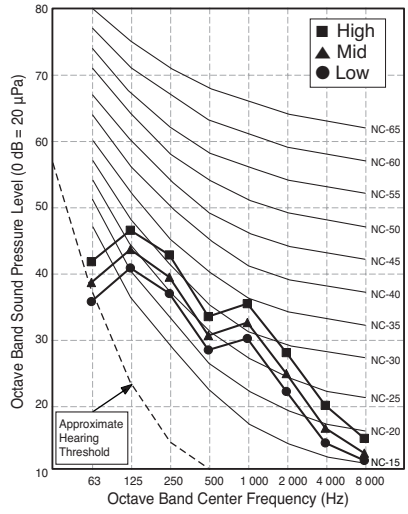

9. Sound Levels

9.2 Sound Power Levels

Model	Sound Power Levels dB(A)
	High Fan Speed
ARNU05GL1G4	47.0
ARNU07GL1G4	48.0
ARNU09GL1G4	49.0
ARNU12GL2G4	52.0
ARNU15GL2G4	53.0
ARNU18GL2G4	54.0
ARNU21GL3G4	56.0
ARNU24GL3G4	58.0

Notes:
- Data is valid at diffuse field condition
- Data is valid at nominal operating condition
- Sound level can be increased in static pressure mode or used air guide.
- Sound power level is measured on the rated condition(external static pressure of standard mode) in the reverberation rooms.
- Sound level will vary depending on a range of factors such as the construction (acoustic absorption coefficient) of particular room in which the equipment in installed.
- Reference acoustic intensity 0dB = 10E-6μW/m²

ARNU05GL1G4

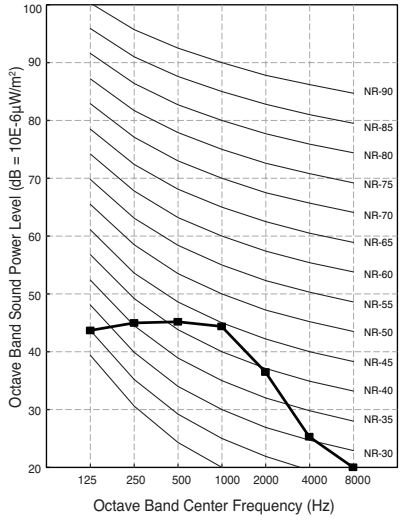

ARNU07GL1G4

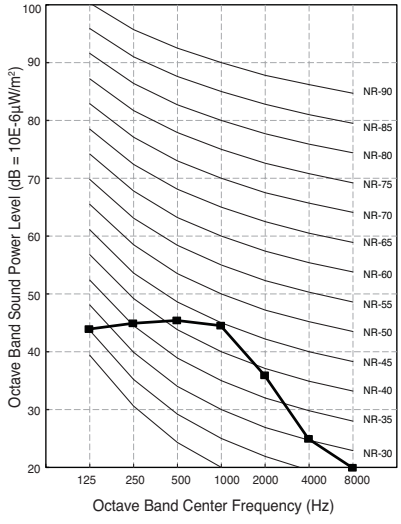

ARNU09GL1G4

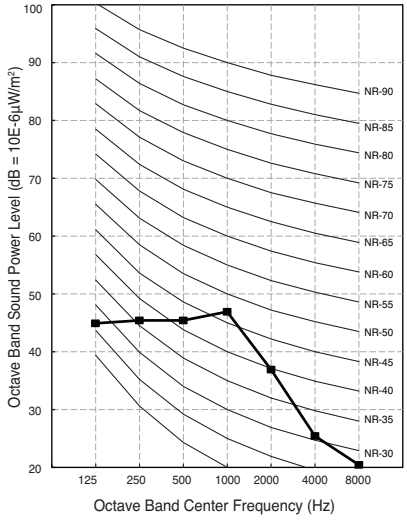

ARNU12GL2G4

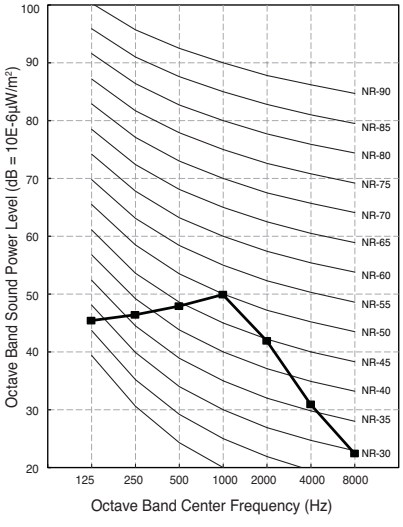

ARNU15GL2G4

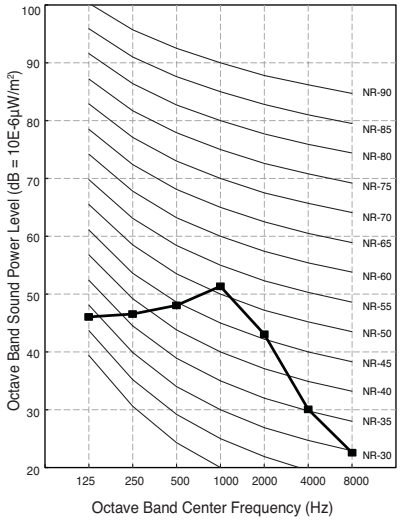

ARNU18GL2G4

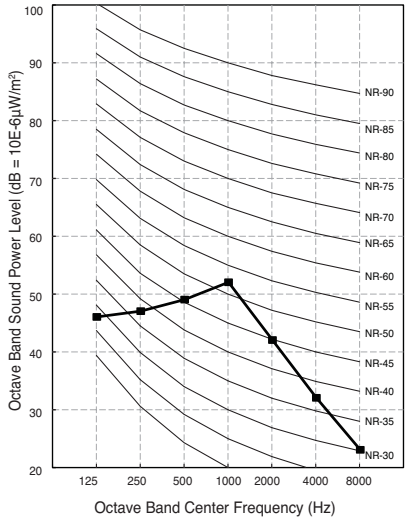

9. Sound Levels

ARNU21GL3G4

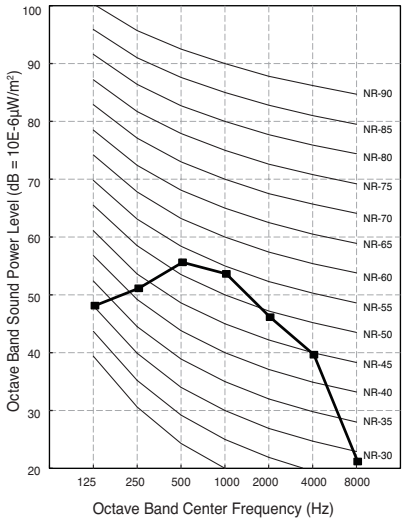

ARNU24GL3G4

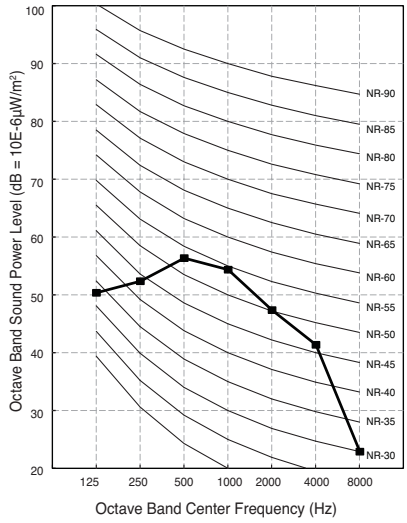

10. Installation

- Please read the instruction sheets completely before installing the product.
- When the power cord is damaged, replacement work shall be performed by authorized personnel only.
- Installation work must be performed in accordance with the national wiring standards by authorized personnel only.

L1/L2/L3 Chassis

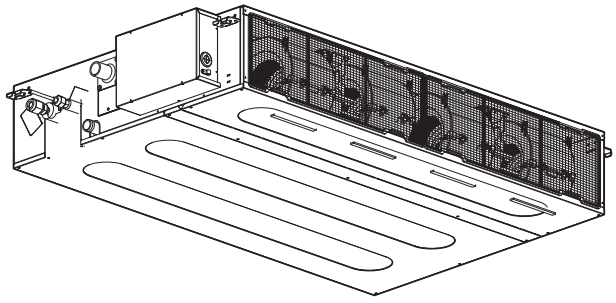

Required Parts

- Connecting cable
- Pipes: Gas side
  Liquid side
- Hanging Bolt
  (W 3/8 or M10 length 650mm)
- Insulated drain hose
- Additional Drain hose

Required Tools

- Level
- Screw driver
- Electric drill
- Hole core drill
- Flaring Tool set
- Torque Wrenches
- Hexagonal Wrench
- Gas-leak detector
- Thermometer

10. Installation

10.1 Selection of the best location

Install the air conditioner in the location that satisfies the following conditions.

- The place shall easily bear a load exceeding four times the indoor unit's weight.
- The place shall be able to inspect the unit as given in the figure.
- The place where the unit shall be leveled.
- The place shall allow easy water drainage.(Suitable dimension "H" is necessary to get a slope to drain as figure.)
- The place shall easily connect with the outdoor unit.
- The place where the unit is not affected by an electrical noise.
- The place where air circulation in the room will be good .
- There should not be any heat source or steam near the unit.
- The servicing inspection hole in the ceiling should be as large as the product.
- The selection of the servicing hole should be approved by the customer.

Top view (Unit: mm)

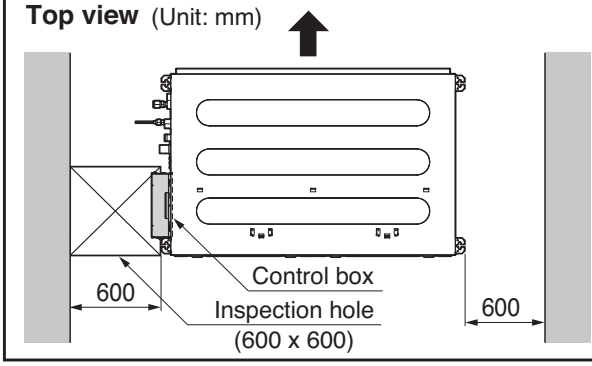

Side view (unit: mm)

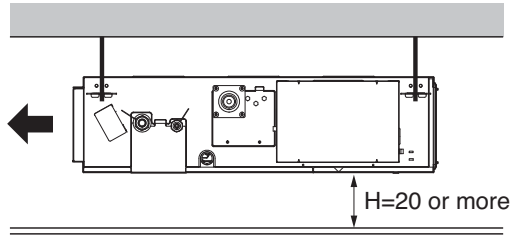

- Suitable dimension "H" is necessary to get a slope to drain as shown in the figure

[L1/L2/L3 Chassis]

(Unit: mm)

Capacity (kBtu/h)	A	B
5/7/9	800	800
12/15/18	800	1000
21/24	800	1200

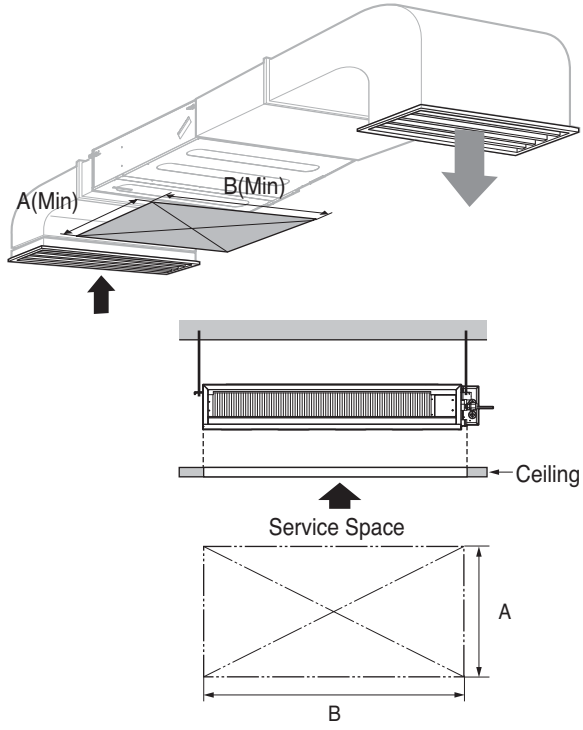

10.2 Ceiling dimension and hanging bolt location

■ **Installation of Unit**
Install the unit above the ceiling correctly.

CASE 1

POSITION OF SUSPENSION BOLT

- Apply a joint-canvas between the unit and duct to absorb unnecessary vibration.
- Install the unit leaning to a drainage hole side as a figure for easy water drainage.

CASE 2

POSITION OF CONSOLE BOLT

- A place where the unit will be leveled and that can support the weight of the unit.
- A place where the unit can withstand its vibration.
- A place where service can be easily performed.

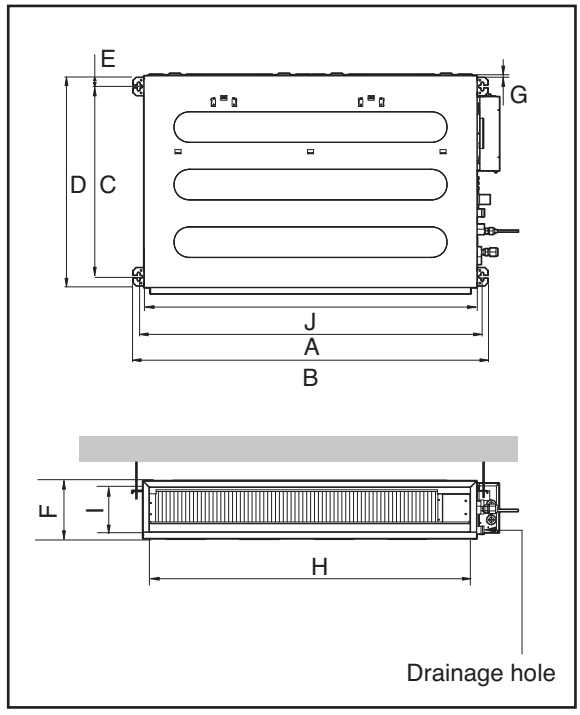

(Unit:mm)

Dimension / Capacity(kBtu/h)	A	B	C	D	E	F	G	H	I	J
5/7/9	733	772	628	700	36	190	20	660	155	700
12/15/18	933	972	628	700	36	190	20	860	155	900
21/24	1133	1172	628	700	36	190	20	1060	155	1100

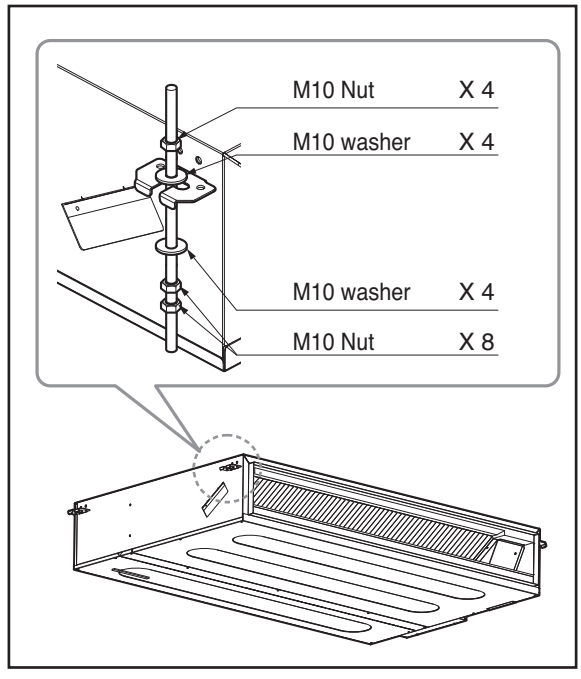

10. Installation

Note:

• Throughly study the following installation locations:

1. In such places as restaurants and kitchens, considerable amount of oil steam and flour adhere to the fan, the fin of the heat exchanger, resulting in heat exchange reduction, spraying, dispersing of water drops, etc.
In these cases, take the following actions:

- **Make sure that the ventilation fan for smoke-collecting hood on a cooking table has sufficient capacity so that it draws oily steam which should not flow into the suction of the air conditioner.**
- **Make enough distance from a cooking room to install the air conditioner in such a place where it may not suck in oil steam.**

2. Avoid installing air conditioner in such circumstances where cutting oil mist or iron powder is in suspension in factories, etc.

3. Avoid places where inflammable gas is generated, flows in, is stored or vented.

4. Avoid places where sulfurous acid gas or corrosive gas is generated.

5. Avoid places near high frequency generators.

10.3 Indoor Unit Installation

- Select and mark the position for fixing bolts.
- Drill the hole for set anchor on the face of ceiling.

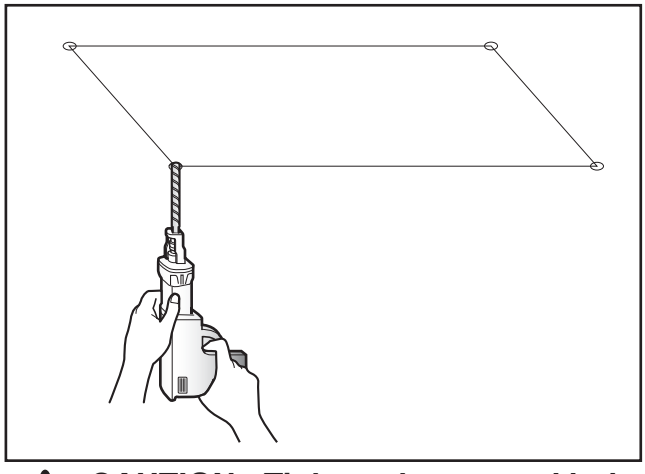

CAUTION : Tighten the nut and bolt to prevent unit falling.

- Insert the set anchor and washer onto the suspension bolts for locking the suspension bolts on the ceiling.
- Mount the suspension bolts to the set anchor firmly.
- Secure the installation plates onto the suspension bolts (adjust level roughly) using nuts, washers and spring washers.

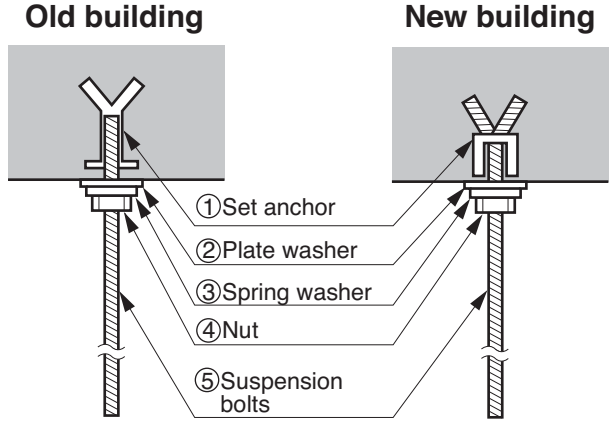

10. Installation

■ Part name and functions

• Low static duct type in case of suction from back side.

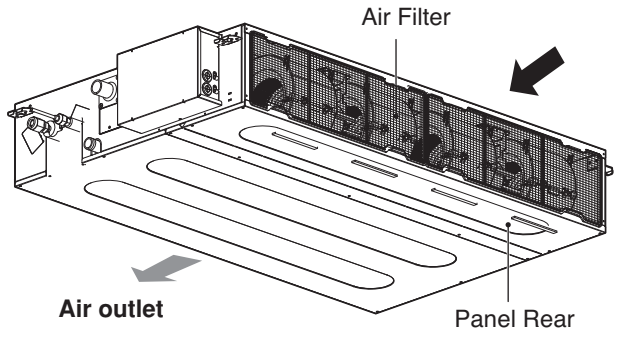

• Low static duct type in case of suction from bottom side.
In this case, reposition the Panel rear part and bend the lower part so that it will match the hole position of cabinet case as shown in the figure.

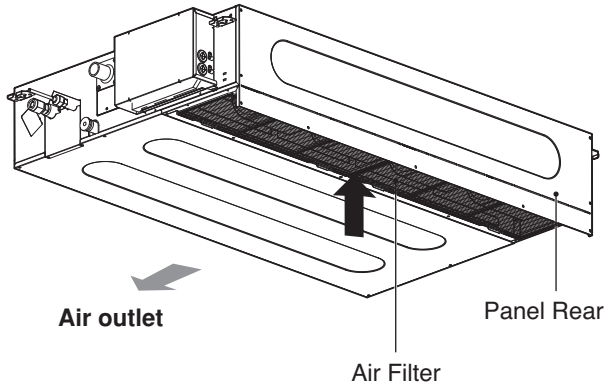

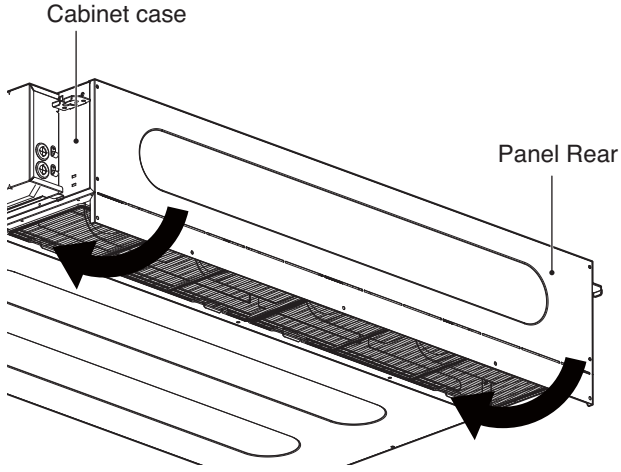

10.4 Connecting Cables

Connect the wires to the terminals on the control board individually according to the outdoor unit connection.

- Ensure that the color of the wires of outdoor unit and the terminal No. are the same as those of indoor unit respectively

L1/L2/L3 Chassis

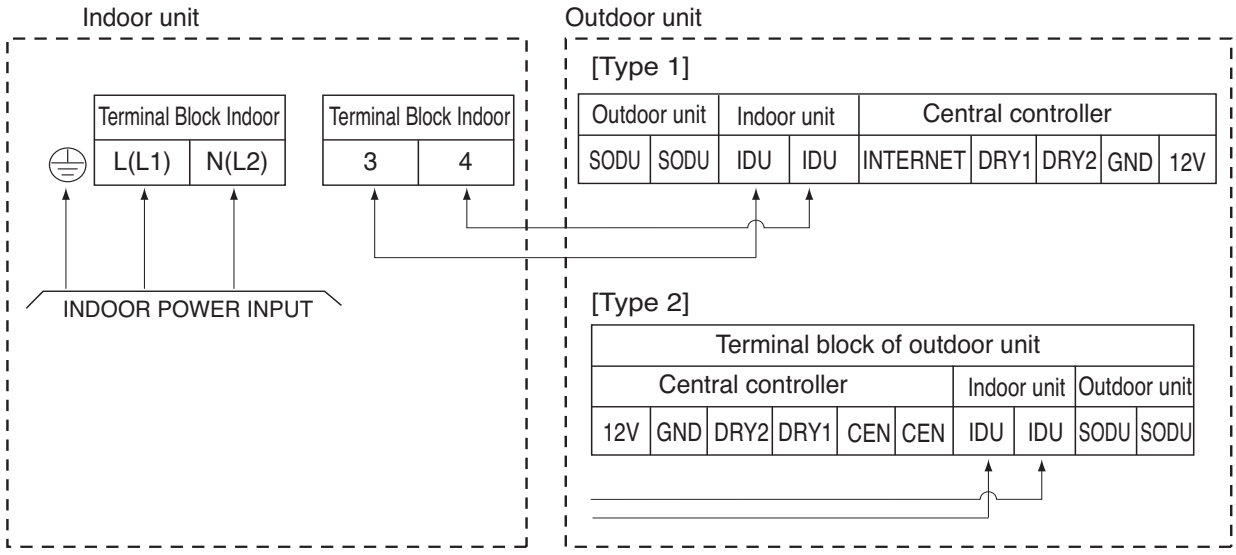

Clamping of cables

1) Arrange 2 power cables on the control panel.
2) First, fasten the steel clamp with a screw to the inner boss of control panel.
3) For the cooling model, fix the other side of the clamp with a screw strongly. For the heat pump model, put the 0.75mm^2 cable(thinner cable) on the clamp and tighten it with a plastic clamp to the other boss of the control panel.

10.5 Checking the Drainage

- Spray one or two glasses of water on the evaporator.
- Ensure that water flows drain hose of indoor unit without any leakage.

10.6 Indoor Unit Drain Piping

- Drain piping must have down-slope (1/50 to 1/100): be sure not to provide up-and-down slope to prevent reversal flow.
- During drain piping connection, be careful not to exert extra force on the drain port on the indoor unit.
- The outside diameter of the drain connection on the indoor unit is 32mm.

Piping material: Polyvinyl chloride pipe inner diometes Ø 25mm and pipe fittings

- Be sure to install heat insulation on the drain piping.

Heat insulation material: Polyethylene foam with thickness more than 8 mm.

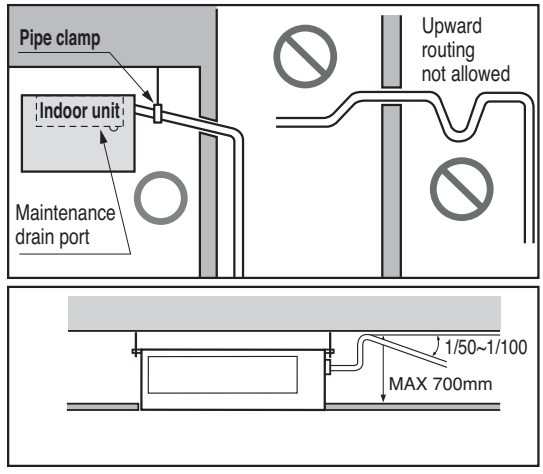

Drain test

The air conditioner uses a drain pump to drain water.
Use the following procedure to test the drain pump operation:

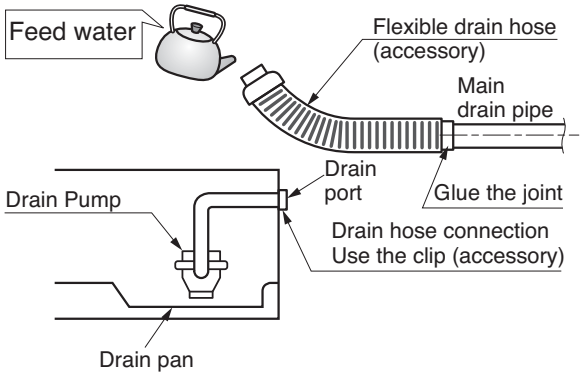

- Connect the main drain pipe to the exterior and leave it provisionally until the test comes to an end.
- Feed water to the flexible drain hose and check the piping for leakage.
- Be sure to check the drain pump for normal operating and noise when electrical wiring is complete.
- When the test is complete, connect the flexible drain hose to the drain port on the indoor unit.

⚠ CAUTION

The supplied flexible drain hose should not be strained.
A strained hose may cause leakage of water.

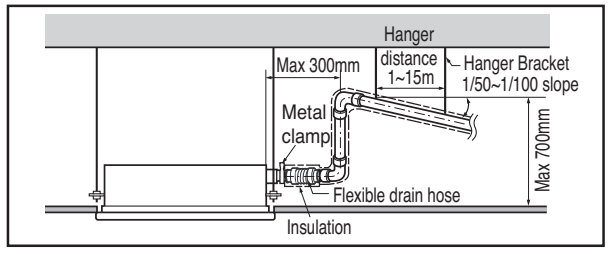

10.7 Ground drain piping

a) It is standard work practice to make connections to the main pipe from above. The pipe down from the combination should be as large as possible.

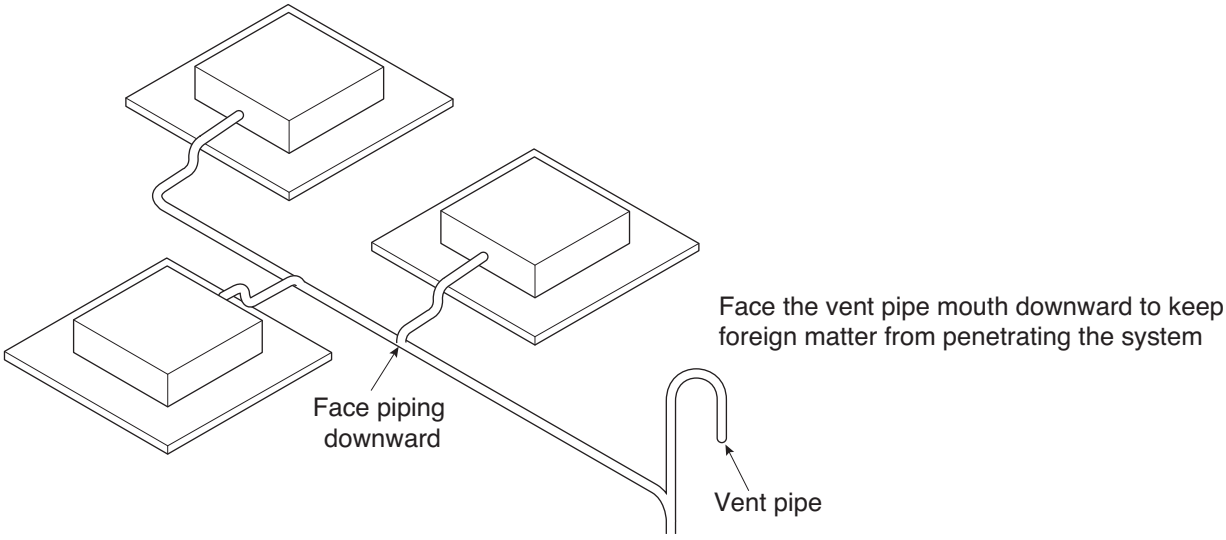

b) The pipe work should be kept as short as possible and the number of indoor units per group kept to a minimum.

10.8 Use of an auxiliary drain hose(flexible)

a) To connect drain pipe to the drain socket on the indoor unit, an auxiliary flexible drain hose should be used. auxiliary flexible drain hose allows that the drain pipe can be connected to the socket without breaking by excessive strain.

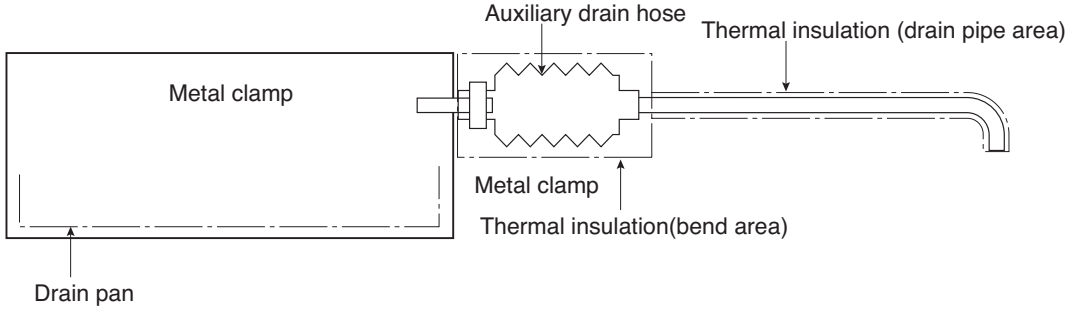

❊ Important points

- The drain pipe should be at least equal in size to that of the indoor unit.
- The drain pipe is thermally insulated to prevent the formation of condensation inside the pipe.
- The drain up mechanism should be fitted before the indoor unit is installed and when the electricity has been connected some water should be added to the drain pan and the drain pump to check and see if it is functioning correctly.
- All connections should be secure. (Special care is needed with PVC pipe)
- Insulate auxiliary drain hose with thermal insulation band.

WIRED REMOTE CONTROLLER INSTALLATION

• Since the room temperature sensor is in the remote controller, the remote controller box should be installed in a place away from direct sunlight, high humidity and direct supply of cold air to maintain proper space temperature.
Install the remote controller about 5ft(1.5m) above the floor in an area with good air circulation at an average temperature.

Do not install the remote controller where it can be affected by:

- Drafts, or dead spots behind doors and in corners.
- Hot or cold air from ducts.
- Radiant heat from sun or appliances.
- Concealed pipes and chimneys.
- Uncontrolled areas such as an outside wall behind the remote controller.
- This remote controller is equipped with a seven segment LED. display. For proper display of the remote controller LED's, the remote controller should be installed properly as shown in Fig.1.
(The standard height is 1.2~1.5 m from floor level.)

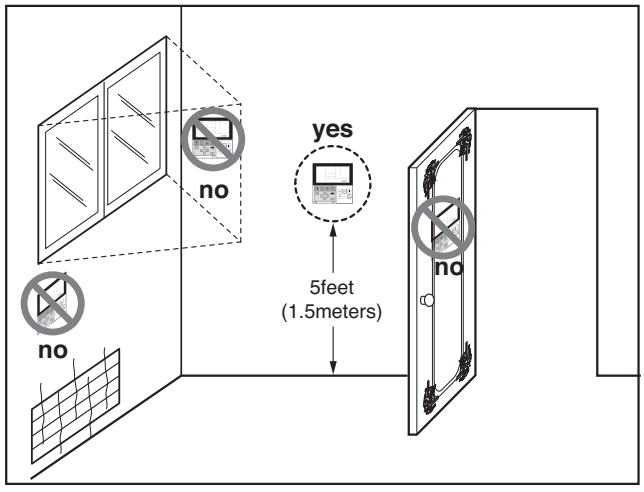

Fig.1 Typical locations for remote controller

11. Accessories

Standard Accessories

Name	Drain hose	Clamp metal	Washer for hanging backet	Clamp (Tie Wrap)	Insulation for fitting	(Other)
Quantity	1 EA	2 EA	8 EA	4 EA	1 SET	
Shape				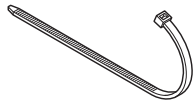	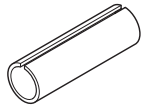 for gas pipe 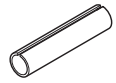 for liquid pipe	• Owner's manual • Installation manual

⚠ CAUTION

• Use only those accessories (Standard or optional) which have designated specifications.

MULTI V™ Indoor unit

Ceiling Concealed Duct_Built in (Low Static)

1. List of functions

2. Specifications

3. Dimensions

4. Piping Diagrams

5. Wiring Diagrams

6. Capacity Tables

7. External Static Pressure (E.S.P) & Air Flow

8. Electric Characteristics

9. Sound Levels

10. Installation

11. Accessories

1. List of Functions

Category	Function	ARNU07GB3G4+PBSGB30(Acc'y), PBSC30(Acc'y) ARNU09GB3G4+PBSGB30(Acc'y), PBSC30(Acc'y) ARNU12GB3G4+PBSGB30(Acc'y), PBSC30(Acc'y) ARNU15GB3G4+PBSGB30(Acc'y), PBSC30(Acc'y) ARNU18GB4G4+PBSGB40(Acc'y), PBSC40(Acc'y) ARNU24GB4G4+PBSGB40(Acc'y), PBSC40(Acc'y)
Air flow	Air supply outlet	1
	Airflow direction control(left & right)	-
	Airflow direction control(up & down)	-
	Auto swing(left & right)	-
	Auto swing(up & down)	-
	Airflow steps(fan/cool/heat)	3 / 3 / 3
	Chaos swing	-
	Chaos wind(auto wind)	-
	Jet cool(Power wind)	-
	Swirl wind	-
Air purifying	Deodorizing filter	X
	Plasma air purifier	X
	Prefilter(washable / anti-fungus)	O
Installation	Drain pump	O
	E.S.P. control	O
	Electric heater(operation)	X
	High ceiling operation	-
Reliability	Hot start	O
	Self diagnosis	O
	Soft dry operation	O
Convenience	Auto changeover	O(Heat recovery)
	Auto cleaning	X
	Auto operation(artificial intelligence)	O(Heat pump or Cooling only)
	Auto restart operation	O
	Child lock	O
	Forced operation	-
	Group control	O
	Sleep mode	X
	Timer(on/off)	O
	Timer(weekly)	O
	Two thermistor control	O
	External On/Off	O
Individual control	Wide wired remote controller (RS2)	PQRCVSL0/PQRCVSL0QW
	Wide wired remote controller (RS2 Plus)	PREMTB001/PREMTBB01
	Premium wired remote controller	PREMTA000/PREMTA000A/PREMTA000B
	Simple wired remote controller	PQRCVCL0Q(W)
	Wired remote controller(for hotel use)	PQRCHCA0Q(W)
	Wireless LCD remote control	PQWRH(C)Q0FDB
Special function kit	Zone control	-
	CTIE	-
	Electro thermostat	-
	Remote temperature sensor	PQRSTA0
	Group control wire	PZCWRCG3
	Dry contact	PDRYCB000/PDRYCB100/PDRYCB300/PDRYCB400/PDRYCB500

O : Applied X : Not applied – : No relation

Option : Model name & price are different according to options, and assembled in factory with main unit.

Accessory : Installed at field, ordered and purchased separately by the corresponding model name, supplied with separate package.

2. Specification

Type			Ceiling Concealed Duct (Built-in (Low Static))		
Accessory			PBSGB30/PBSC30	PBSGB30/PBSC30	PBSGB30/PBSC30
Model		Unit	ARNU07GB3G4	ARNU09GB3G4	ARNU12GB3G4
Cooling Capacity		kW	2.2	2.8	3.6
		kcal/h	1,900	2,400	3,100
		Btu/h	7,500	9,600	12,300
Heating Capacity		kW	2.5	3.2	4.0
		kcal/h	2,200	2,800	3,400
		Btu/h	8,500	10,900	13,600
Casing			Galvanized Steel Plate	Galvanized Steel Plate	Galvanized Steel Plate
Dimensions(WxHxD)	Body	mm	820 x 190 x 575	820 x 190 x 575	820 x 190 x 575
		inch	32-9/32 x 7-15/32 x 22-5/8	32-9/32 x 7-15/32 x 22-5/8	32-9/32 x 7-15/32 x 22-5/8
Coil	Rows x Columns x FPI		2 x 11 x 21	2 x 11 x 21	2 x 11 x 21
	Face Area	m^2	0.16	0.16	0.16
Fan	Type		Sirocco Fan	Sirocco Fan	Sirocco Fan
	Motor Output x Number	W	19 x 1, 5 x 1	19 x 1, 5 x 1	19 x 1, 5 x 1
	Running Current	A	0.76	0.76	0.76
	Air Flow Rate(H / M / L)	CMM	8.0 / 6.5 / 5.5	9.0 / 7.0 / 6.0	10.0 / 8.0 / 6.5
	(High Mode-factor set)	cfm	283 / 229 / 194	318 / 247 / 212	353 / 283 / 229
	External Static Pressure	mmAq(Pa)	2(20)	2(20)	2(20)
	Air Flow Rate(H / M / L)	CMM	8.0 / 6.5 / 5.5	9.0 / 7.0 / 6.0	10.0 / 8.0 / 6.5
	(Standard Mode)	cfm	283 / 229 / 194	318 / 247 / 212	353 / 283 / 229
	External Static Pressure	mmAq(Pa)	0(0)	0(0)	0(0)
	Drive		Direct	Direct	Direct
	Motor type		BLDC	BLDC	BLDC
Temperature Control			Microprocessor, Thermostat for cooling and heating	Microprocessor, Thermostat for cooling and heating	Microprocessor, Thermostat for cooling and heating
Sound Absorbing Thermal Insulation Material			Foamed polystrene	Foamed polystrene	Foamed polystrene
Air Filter			-	-	-
Safety Device			Fuse, Thermal Fuse for Fan Motor	Fuse, Thermal Fuse for Fan Motor	Fuse, Thermal Fuse for Fan Motor
Pipe Connections	Liquid Side	mm(inch)	Ø6.35(1/4)	Ø6.35(1/4)	Ø6.35(1/4)
	Gas Side	mm(inch)	Ø12.7(1/2)	Ø12.7(1/2)	Ø12.7(1/2)
	Drain Pipe(Internal Dia.)	mm(inch)	25.4(1)	25.4(1)	25.4(1)
Net Weight		kg(lbs)	21(46.3)	21(46.3)	21(46.3)
Noise Level(Sound Press, 1m, H / M / L)		dB(A)	33 / 32 / 29	34 / 33 / 32	35 / 34 / 33
Power Supply		Ø, V, Hz	1, 220-240, 50	1, 220-240, 50	1, 220-240, 50
			1, 220, 60	1, 220, 60	1, 220, 60
Refrigerant Control			EEV	EEV	EEV
Transmission cable		mm^2	CVV-SB 1.0~1.5 x 2C	CVV-SB 1.0~1.5 x 2C	CVV-SB 1.0~1.5 x 2C

Notes:

1. Capacities are based on the following conditions:
   - Cooling
     - Indoor temp. 27°C[80.6°F]DB/ 19°C[66.2°F]WB
     - Outdoor temp. 35°C[95°F]DB/ 24°C[75.2°F]WB
     - Interconnecting Piping Length 7.5m
     - Level Difference of Zero
   - Heating
     - Indoor temp. 20°C[68°F]DB/ 15°C[59°F]WB
     - Outdoor temp. 7°C[44.6°F]DB/ 6°C[42.8°F]WB
     - Interconnecting Piping Length 7.5m
     - Level Difference of Zero
2. Capacities are net capacities
3. Due to our policy of innovation some specifications may be changed without notification
4. Wiring cable size must comply with the applicable local and national codes. And “Electric characteristics” chapter should be considered for electrical work and design. Especially the power cable and circuit breaker should be selected in accordance with that.
5. EEV: Electronic Expansion Valve
6. Anechoic chamber conversion value is measured at 1.5 m downward from unit centre.
   The values depends on the ambient conditions and values are normally higher in actual operation.

Conversion Formula
kcal/h= kW x 860
Btu/h = kW x 3412
cfm = m^3/min x 35.3
l/s = CMM x 1000/60

2. Specification

Type			Ceiling Concealed Duct (Built-in (Low Static))		
Accessory			PBSGB30/PBSC30	PBSGB40/PBSC40	PBSGB40/PBSC40
Model		Unit	ARNU15GB3G4	ARNU18GB4G4	ARNU24GB4G4
Cooling Capacity		kW	4.5	5.6	7.1
		kcal/h	3,900	4,800	6,100
		Btu/h	15,400	19,100	24,200
Heating Capacity		kW	5.0	6.3	8.0
		kcal/h	4,300	5,400	6,900
		Btu/h	17,100	21,500	27,300
Casing			Galvanized Steel Plate	Galvanized Steel Plate	Galvanized Steel Plate
Dimensions(WxHxD)	Body	mm	820 x 190 x 575	1,100 x 190 x 575	1,100 x 190 x 575
		inch	32-9/32 x 7-15/32 x 22-5/8	43-5/16 x 7-15/32 x 22-5/8	43-5/16 x 7-15/32 x 22-5/8
Coil	Rows x Columns x FPI		2 x 11 x 21	3 x 10 x 18	3 x 10 x 18
	Face Area	m^2	0.16	0.23	0.23
Fan	Type		Sirocco Fan	Sirocco Fan	Sirocco Fan
	Motor Output x Number	W	19 x 1, 5 x 1	19 x 2	19 x 2
	Running Current	A	0.76	0.97	0.97
	Air Flow Rate(H / M / L)	CMM	11.0 / 10.0 / 8.0	14.0 / 12.0 / 10.0	17.0 / 15.0 / 10.0
	(High Mode-factor set)	cfm	388 / 353 / 283	494 / 424 / 353	600 / 530 / 353
	External Static Pressure	mmAq(Pa)	2(20)	2(20)	2(20)
	Air Flow Rate(H / M / L)	CMM	11.0 / 10.0 / 8.0	14.0 / 12.0 / 10.0	17.0 / 15.0 / 10.0
	(Standard Mode)	cfm	388 / 353 / 283	494 / 424 / 353	600 / 530 / 353
	External Static Pressure	mmAq(Pa)	0(0)	0(0)	0(0)
	Drive		Direct	Direct	Direct
	Motor type		BLDC	BLDC	BLDC
Temperature Control			Microprocessor, Thermostat for cooling and heating	Microprocessor, Thermostat for cooling and heating	Microprocessor, Thermostat for cooling and heating
Sound Absorbing Thermal Insulation Material			Foamed polystrene	Foamed polystrene	Foamed polystrene
Air Filter			-	-	-
Safety Device			Fuse, Thermal Fuse for Fan Motor	Fuse, Thermal Fuse for Fan Motor	Fuse, Thermal Fuse for Fan Motor
Pipe Connections	Liquid Side	mm(inch)	Ø6.35(1/4)	Ø6.35(1/4)	Ø9.52(3/8)
	Gas Side	mm(inch)	Ø12.7(1/2)	Ø12.7(1/2)	Ø15.88(5/8)
	Drain Pipe(Internal Dia.)	mm(inch)	25.4(1)	25.4(1)	25.4(1)
Net Weight		kg(lbs)	21(46.3)	26(57.3)	26(57.3)
Noise Level(Sound Press, 1m, H / M / L)		dB(A)	41 / 40 / 37	43 / 40 / 37	46 / 43 / 37
Power Supply		Ø, V, Hz	1, 220-240, 50	1, 220-240, 50	1, 220-240, 50
			1, 220, 60	1, 220, 60	1, 220, 60
Refrigerant Control			EEV	EEV	EEV
Transmission cable		mm^2	CVV-SB 1.0~1.5 x 2C	CVV-SB 1.0~1.5 x 2C	CVV-SB 1.0~1.5 x 2C

Notes:

1. Capacities are based on the following conditions:
   - Cooling
     - Indoor temp. 27°C[80.6°F]DB/ 19°C[66.2°F]WB
     - Outdoor temp. 35°C[95°F]DB/ 24°C[75.2°F]WB
     - Interconnecting Piping Length 7.5m
     - Level Difference of Zero
   - Heating
     - Indoor temp. 20°C[68°F]DB/ 15°C[59°F]WB
     - Outdoor temp. 7°C[44.6°F]DB/ 6°C[42.8°F]WB
     - Interconnecting Piping Length 7.5m
     - Level Difference of Zero
2. Capacities are net capacities
3. Due to our policy of innovation some specifications may be changed without notification
4. Wiring cable size must comply with the applicable local and national codes. And “Electric characteristics” chapter should be considered for electrical work and design. Especially the power cable and circuit breaker should be selected in accordance with that.
5. EEV: Electronic Expansion Valve
6. Anechoic chamber conversion value is measured at 1.5 m downward from unit centre.
   The values depends on the ambient conditions and values are normally higher in actual operation.

Conversion Formula
kcal/h= kW x 860
Btu/h = kW x 3412
cfm = m^3/min x 35.3
l/s = CMM x 1000/60

Ceiling Concealed Duct (Built-in (Low Static))

ARNU07GB3G4+PBSGB30(Acc'y), PBSC30(Acc'y)
ARNU09GB3G4+PBSGB30(Acc'y), PBSC30(Acc'y)
ARNU12GB3G4+PBSGB30(Acc'y), PBSC30(Acc'y)
ARNU15GB3G4+PBSGB30(Acc'y), PBSC30(Acc'y)
ARNU18GB4G4+PBSGB40(Acc'y), PBSC40(Acc'y)
ARNU24GB4G4+PBSGB40(Acc'y), PBSC40(Acc'y)

With Suction Grille

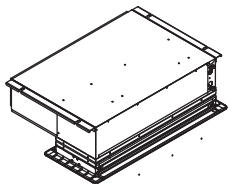

With Suction Grille & Suction Canvas

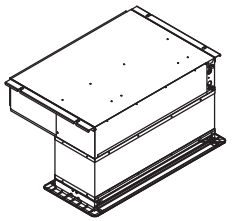

B3/B4

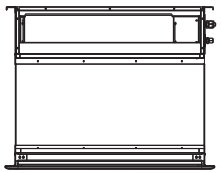

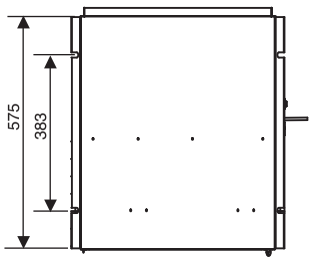

With Suction Grille & Suction Canvas

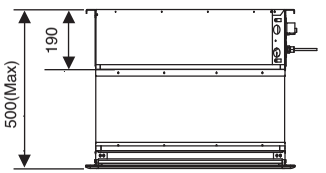

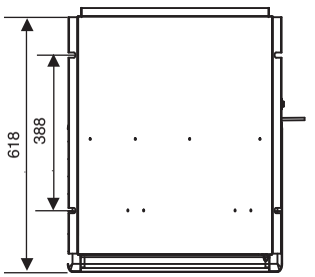

With Suction Grille

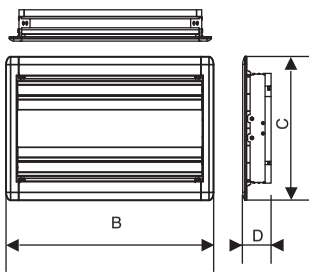

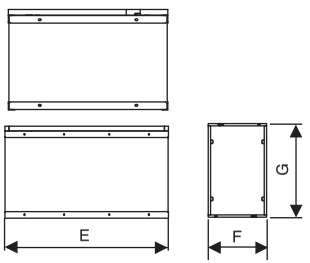

Btu/h	A
7,9,12,15k	820
18,24k	1100

	B	C	D
PBSGB30	910	359	56
PBSGB40	1188	359	56

	E	F	G
PBSC30	821	274	42~250
PBSC40	1100	274	42~250

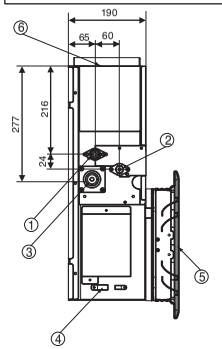

(unit : mm)

Number	Name	Descripition
1	Liquid pipe connection	Unit size(7k,9k,12k,15k,18k):ø6.35 Unit size(24k):ø9.52
2	Gas pipe connection	Unit size(7k,9k,12k,15k,18k):ø12.7 Unit size(24k):ø15.88
3	Drain pipe connection	
4	Power supply connection	
5	Air suction	
6	Air discharge	

▣ Note

1. Unit should be installed in compliance with the installation manual in the product box.
2. Unit shall be grounded in accordance with the local regulations or applicable national codes.

LG Electronics

CHASSIS CODE: B3/B4

4. Piping Diagrams

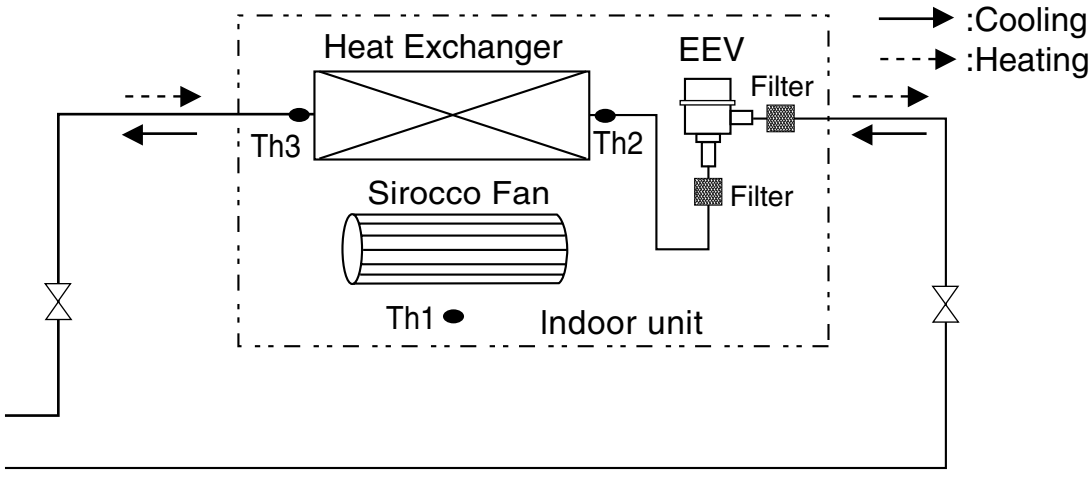

Refrigerant pipe connection port diameter

[Unit: mm(inch)]

MODEL	GAS	LIQUID
ARNU07GB3G4+PBSGB30(Acc'y), PBSC30(Acc'y)	Ø12.7(1/2)	Ø6.35(1/4)
ARNU09GB3G4+PBSGB30(Acc'y), PBSC30(Acc'y)	Ø12.7(1/2)	Ø6.35(1/4)
ARNU12GB3G4+PBSGB30(Acc'y), PBSC30(Acc'y)	Ø12.7(1/2)	Ø6.35(1/4)
ARNU15GB3G4+PBSGB30(Acc'y), PBSC30(Acc'y)	Ø12.7(1/2)	Ø6.35(1/4)
ARNU18GB4G4+PBSGB40(Acc'y), PBSC40(Acc'y)	Ø12.7(1/2)	Ø6.35(1/4)
ARNU24GB4G4+PBSGB40(Acc'y), PBSC40(Acc'y)	Ø15.88(5/8)	Ø9.52(3/8)

LOC.	Description	PCB Connector (Color)
Th1	Thermistor for room air temperature	CN-ROOM (Yellow)
Th2	Thermistor for pipe in temperature	CN-PIPE/IN (White)
Th3	Thermistor for pipe out temperature	CN-PIPE/OUT (Red)

5. Wiring Diagrams

B3/B4 Chassis

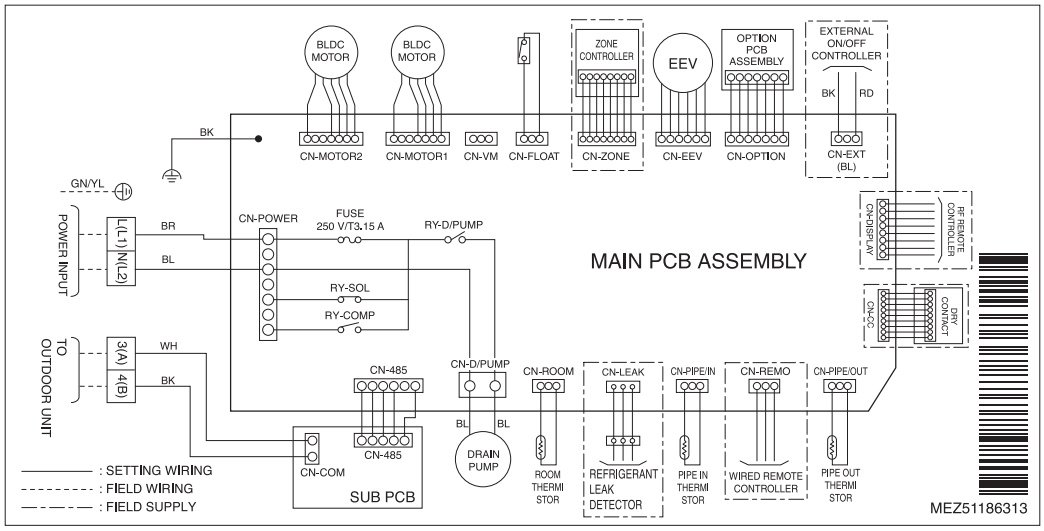

CONNECTOR NUMBER	SPEC.	DESCRIPTION
CN-MOTOR1	Fan motor output	Motor output of BLDC
CN-MOTOR2	Fan motor output	Motor output of BLDC
CN-PIPE/OUT	Discharge pipe sensor	Pipe out thermistor
CN-PIPE/IN	Suction pipe sensor	Pipe in thermistor
CN-ROOM	Room sensor	Room thermistor
CN-REMO	Remote controller	Remote control line
CN-FLOAT	Float switch input	Float switch sensing
CN-EEV	EEV output	EEV control output
CN-D/PUMP	Drain pump output	AC output for drain pump
CN-OPTION	Option PWB.	Communication between main and option
CN-COM	Communication	Communication between indoor and outdoor
CN-D/PUMP	Drain pump output	AC output for drain pump
CN-POWER	AC power supply	AC power line input for indoor controller
CN-ZONE	Zone Controller	Zone control line
CN-DISPLAY	RF Remote controller	RF remote control line
CN-CC	Dry contact	Dry contact line
CN-EXT	External On/Off	External On/Off signal input

	Function	Description	Setting Off	Setting On	Default
SW1	Communication	N/A (Default)	-	-	Off
SW2	Cycle	N/A (Default)	-	-	Off
SW3	Group Control	Selection of Master or Slave	Master	Slave	Off
SW4	Dry Contact Mode	Selection of Dry Contact Mode	Wired/Wireless remote controller selection of Manual or Auto operation Mode	Auto	Off
SW5	Installation	Fan continuous operation	Continuous operation Removal	-	Off
SW6	Heater linkage	N/A	-	-	Off
SW7	Ventilator linkage	Selection of Ventilator linkage	Linkage Removal	Working	Off
	Vane selection (Console)	Selection of up/down side Vane	Up side + Down side Vane	Up side Vane Only	
	Region selection	Selection tropical region	General model	Tropical model	
SW8	Etc.	Spare	-	-	Off

⚠ CAUTION

For Multi V Models, DIP switch 1, 2, 6, 8 must be set OFF.

6. Capacity Tables

6.1 Cooling Capacity

Cooling capacity

Capacity Index	Outdoor air temp. (DB, °C)	Indoor air temp. (DB/WB, °C)													
		20		23		26		27		28		30		32	
		14		16		18		19		20		22		24	
		TC	SHC	TC	SHC	TC	SHC	TC	SHC	TC	SHC	TC	SHC	TC	SHC
		kW	kW	kW	kW	kW	kW	kW	kW	kW	kW	kW	kW	kW	kW
2.2	10	1.5	1.3	1.8	1.5	2.1	1.6	2.2	1.6	2.3	1.7	2.6	1.7	2.9	1.7
	12	1.5	1.3	1.8	1.5	2.1	1.6	2.2	1.6	2.3	1.7	2.6	1.7	2.9	1.7
	14	1.5	1.3	1.8	1.5	2.1	1.6	2.2	1.6	2.3	1.7	2.6	1.7	2.8	1.7
	16	1.5	1.3	1.8	1.5	2.1	1.6	2.2	1.6	2.3	1.7	2.6	1.7	2.8	1.6
	18	1.5	1.3	1.8	1.5	2.1	1.6	2.2	1.6	2.3	1.7	2.6	1.7	2.7	1.6
	20	1.5	1.3	1.8	1.5	2.1	1.6	2.2	1.6	2.3	1.7	2.6	1.7	2.7	1.6
	21	1.5	1.3	1.8	1.5	2.1	1.6	2.2	1.6	2.3	1.7	2.6	1.7	2.7	1.6
	23	1.5	1.3	1.8	1.5	2.1	1.6	2.2	1.6	2.3	1.7	2.6	1.7	2.6	1.6
	25	1.5	1.3	1.8	1.5	2.1	1.6	2.2	1.6	2.3	1.7	2.6	1.7	2.6	1.5
	27	1.5	1.3	1.8	1.5	2.1	1.6	2.2	1.6	2.3	1.7	2.5	1.7	2.6	1.5
	29	1.5	1.3	1.8	1.5	2.1	1.6	2.2	1.6	2.3	1.7	2.5	1.6	2.5	1.5
	31	1.5	1.3	1.8	1.5	2.1	1.6	2.2	1.6	2.3	1.7	2.5	1.6	2.5	1.5
	33	1.5	1.3	1.8	1.5	2.1	1.6	2.2	1.6	2.3	1.7	2.4	1.6	2.5	1.5
	35	1.5	1.3	1.8	1.5	2.1	1.6	2.2	1.6	2.3	1.7	2.4	1.6	2.4	1.4
	37	1.5	1.3	1.8	1.5	2.1	1.6	2.2	1.6	2.3	1.6	2.3	1.5	2.4	1.4
	39	1.5	1.3	1.8	1.5	2.1	1.6	2.2	1.6	2.2	1.6	2.3	1.5	2.3	1.4
2.8	10	1.9	1.7	2.3	1.9	2.6	2.0	2.8	2.0	3.0	2.1	3.4	2.2	3.7	2.2
	12	1.9	1.7	2.3	1.9	2.6	2.0	2.8	2.0	3.0	2.1	3.4	2.2	3.6	2.1
	14	1.9	1.7	2.3	1.9	2.6	2.0	2.8	2.0	3.0	2.1	3.4	2.2	3.6	2.1
	16	1.9	1.7	2.3	1.9	2.6	2.0	2.8	2.0	3.0	2.1	3.4	2.2	3.5	2.1
	18	1.9	1.7	2.3	1.9	2.6	2.0	2.8	2.0	3.0	2.1	3.4	2.2	3.5	2.1
	20	1.9	1.7	2.3	1.9	2.6	2.0	2.8	2.0	3.0	2.1	3.4	2.2	3.4	2.0
	21	1.9	1.7	2.3	1.9	2.6	2.0	2.8	2.0	3.0	2.1	3.4	2.2	3.4	2.0
	23	1.9	1.7	2.3	1.9	2.6	2.0	2.8	2.0	3.0	2.1	3.4	2.2	3.4	2.0
	25	1.9	1.7	2.3	1.9	2.6	2.0	2.8	2.0	3.0	2.1	3.3	2.2	3.3	2.0
	27	1.9	1.7	2.3	1.9	2.6	2.0	2.8	2.0	3.0	2.1	3.2	2.1	3.3	1.9
	29	1.9	1.7	2.3	1.9	2.6	2.0	2.8	2.0	3.0	2.1	3.2	2.1	3.2	1.9
	31	1.9	1.7	2.3	1.9	2.6	2.0	2.8	2.0	3.0	2.1	3.1	2.1	3.2	1.9
	33	1.9	1.7	2.3	1.9	2.6	2.0	2.8	2.0	3.0	2.1	3.1	2.0	3.1	1.9
	35	1.9	1.7	2.3	1.9	2.6	2.0	2.8	2.0	3.0	2.1	3.0	2.0	3.1	1.8
	37	1.9	1.7	2.3	1.9	2.6	2.0	2.8	2.0	2.9	2.1	3.0	1.9	3.0	1.8
	39	1.9	1.7	2.3	1.9	2.6	2.0	2.8	2.0	2.9	2.0	2.9	1.9	3.0	1.8
3.6	10	2.4	2.2	2.9	2.4	3.4	2.6	3.6	2.6	3.8	2.7	4.3	2.8	4.7	2.8
	12	2.4	2.2	2.9	2.4	3.4	2.6	3.6	2.6	3.8	2.7	4.3	2.8	4.7	2.8
	14	2.4	2.2	2.9	2.4	3.4	2.6	3.6	2.6	3.8	2.7	4.3	2.8	4.6	2.7
	16	2.4	2.2	2.9	2.4	3.4	2.6	3.6	2.6	3.8	2.7	4.3	2.8	4.6	2.7
	18	2.4	2.2	2.9	2.4	3.4	2.6	3.6	2.6	3.8	2.7	4.3	2.8	4.5	2.7
	20	2.4	2.2	2.9	2.4	3.4	2.6	3.6	2.6	3.8	2.7	4.3	2.8	4.4	2.6
	21	2.4	2.2	2.9	2.4	3.4	2.6	3.6	2.6	3.8	2.7	4.3	2.8	4.4	2.6
	23	2.4	2.2	2.9	2.4	3.4	2.6	3.6	2.6	3.8	2.7	4.3	2.8	4.3	2.6
	25	2.4	2.2	2.9	2.4	3.4	2.6	3.6	2.6	3.8	2.7	4.2	2.8	4.3	2.5
	27	2.4	2.2	2.9	2.4	3.4	2.6	3.6	2.6	3.8	2.7	4.1	2.7	4.2	2.5
	29	2.4	2.2	2.9	2.4	3.4	2.6	3.6	2.6	3.8	2.7	4.1	2.7	4.2	2.5
	31	2.4	2.2	2.9	2.4	3.4	2.6	3.6	2.6	3.8	2.7	4.0	2.6	4.1	2.4
	33	2.4	2.2	2.9	2.4	3.4	2.6	3.6	2.6	3.8	2.7	4.0	2.6	4.0	2.4
	35	2.4	2.2	2.9	2.4	3.4	2.6	3.6	2.6	3.8	2.7	3.9	2.6	4.0	2.3
	37	2.4	2.2	2.9	2.4	3.4	2.6	3.6	2.6	3.7	2.6	3.8	2.5	3.9	2.3
	39	2.4	2.2	2.9	2.4	3.4	2.6	3.6	2.6	3.7	2.6	3.7	2.5	3.8	2.3

Notes:
TC: Total Capacity(kW)
SHC: Sensible Heat Capacity(kW)
1. Capacity tables show the representative value of conditions which may occur.
2. Refer to Capacity Correction Factor in the outdoor unit PDB for the actual performance data of each indoor unit and outdoor unit combination.

6. Capacity Tables

Cooling capacity

Capacity Index	Outdoor air temp. (DB, °C)	Indoor air temp. (DB/WB, °C)													
		20		23		26		27		28		30		32	
		14		16		18		19		20		22		24	
		TC	SHC	TC	SHC	TC	SHC	TC	SHC	TC	SHC	TC	SHC	TC	SHC
		kW	kW	kW	kW	kW	kW	kW	kW	kW	kW	kW	kW	kW	kW
4.5	10	3.0	2.6	3.6	2.9	4.2	3.1	4.5	3.2	4.8	3.3	5.4	3.5	5.9	3.4
	12	3.0	2.6	3.6	2.9	4.2	3.1	4.5	3.2	4.8	3.3	5.4	3.5	5.8	3.4
	14	3.0	2.6	3.6	2.9	4.2	3.1	4.5	3.2	4.8	3.3	5.4	3.5	5.8	3.3
	16	3.0	2.6	3.6	2.9	4.2	3.1	4.5	3.2	4.8	3.3	5.4	3.5	5.7	3.3
	18	3.0	2.6	3.6	2.9	4.2	3.1	4.5	3.2	4.8	3.3	5.4	3.5	5.6	3.3
	20	3.0	2.6	3.6	2.9	4.2	3.1	4.5	3.2	4.8	3.3	5.4	3.5	5.5	3.2
	21	3.0	2.6	3.6	2.9	4.2	3.1	4.5	3.2	4.8	3.3	5.4	3.5	5.5	3.2
	23	3.0	2.6	3.6	2.9	4.2	3.1	4.5	3.2	4.8	3.3	5.4	3.5	5.4	3.1
	25	3.0	2.6	3.6	2.9	4.2	3.1	4.5	3.2	4.8	3.3	5.3	3.4	5.3	3.1
	27	3.0	2.6	3.6	2.9	4.2	3.1	4.5	3.2	4.8	3.3	5.2	3.3	5.3	3.1
	29	3.0	2.6	3.6	2.9	4.2	3.1	4.5	3.2	4.8	3.3	5.1	3.3	5.2	3.0
	31	3.0	2.6	3.6	2.9	4.2	3.1	4.5	3.2	4.8	3.3	5.1	3.2	5.1	2.9
	33	3.0	2.6	3.6	2.9	4.2	3.1	4.5	3.2	4.8	3.3	4.9	3.2	5.0	2.9
	35	3.0	2.6	3.6	2.9	4.2	3.1	4.5	3.2	4.8	3.3	4.9	3.1	4.9	2.9
	37	3.0	2.6	3.6	2.9	4.2	3.1	4.5	3.2	4.7	3.2	4.8	3.1	4.9	2.8
	39	3.0	2.6	3.6	2.9	4.2	3.1	4.5	3.2	4.6	3.1	4.7	3.0	4.8	2.8
5.6	10	3.8	3.3	4.5	3.6	5.2	3.9	5.6	4.0	6.0	4.1	6.7	4.3	7.4	4.2
	12	3.8	3.3	4.5	3.6	5.2	3.9	5.6	4.0	6.0	4.1	6.7	4.3	7.3	4.2
	14	3.8	3.3	4.5	3.6	5.2	3.9	5.6	4.0	6.0	4.1	6.7	4.3	7.2	4.1
	16	3.8	3.3	4.5	3.6	5.2	3.9	5.6	4.0	6.0	4.1	6.7	4.3	7.1	4.1
	18	3.8	3.3	4.5	3.6	5.2	3.9	5.6	4.0	6.0	4.1	6.7	4.3	7.0	4.0
	20	3.8	3.3	4.5	3.6	5.2	3.9	5.6	4.0	6.0	4.1	6.7	4.3	6.9	4.0
	21	3.8	3.3	4.5	3.6	5.2	3.9	5.6	4.0	6.0	4.1	6.7	4.3	6.8	3.9
	23	3.8	3.3	4.5	3.6	5.2	3.9	5.6	4.0	6.0	4.1	6.7	4.3	6.7	3.9
	25	3.8	3.3	4.5	3.6	5.2	3.9	5.6	4.0	6.0	4.1	6.6	4.2	6.6	3.8
	27	3.8	3.3	4.5	3.6	5.2	3.9	5.6	4.0	6.0	4.1	6.4	4.1	6.6	3.8
	29	3.8	3.3	4.5	3.6	5.2	3.9	5.6	4.0	6.0	4.1	6.4	4.1	6.5	3.7
	31	3.8	3.3	4.5	3.6	5.2	3.9	5.6	4.0	6.0	4.1	6.3	4.0	6.4	3.7
	33	3.8	3.3	4.5	3.6	5.2	3.9	5.6	4.0	6.0	4.1	6.2	3.9	6.3	3.6
	35	3.8	3.3	4.5	3.6	5.2	3.9	5.6	4.0	6.0	4.1	6.0	3.9	6.2	3.5
	37	3.8	3.3	4.5	3.6	5.2	3.9	5.6	4.0	5.8	4.0	5.9	3.8	6.1	3.5
	39	3.8	3.3	4.5	3.6	5.2	3.9	5.6	4.0	5.7	3.9	5.8	3.7	6.0	3.4
7.1	10	4.8	4.1	5.7	4.6	6.6	5.0	7.1	5.0	7.6	5.2	8.5	5.4	9.3	5.4
	12	4.8	4.1	5.7	4.6	6.6	5.0	7.1	5.0	7.6	5.2	8.5	5.4	9.2	5.3
	14	4.8	4.1	5.7	4.6	6.6	5.0	7.1	5.0	7.6	5.2	8.5	5.4	9.1	5.2
	16	4.8	4.1	5.7	4.6	6.6	5.0	7.1	5.0	7.6	5.2	8.5	5.4	9.0	5.2
	18	4.8	4.1	5.7	4.6	6.6	5.0	7.1	5.0	7.6	5.2	8.5	5.4	8.8	5.1
	20	4.8	4.1	5.7	4.6	6.6	5.0	7.1	5.0	7.6	5.2	8.5	5.4	8.7	5.0
	21	4.8	4.1	5.7	4.6	6.6	5.0	7.1	5.0	7.6	5.2	8.5	5.4	8.7	5.0
	23	4.8	4.1	5.7	4.6	6.6	5.0	7.1	5.0	7.6	5.2	8.5	5.4	8.5	4.9
	25	4.8	4.1	5.7	4.6	6.6	5.0	7.1	5.0	7.6	5.2	8.4	5.4	8.4	4.8
	27	4.8	4.1	5.7	4.6	6.6	5.0	7.1	5.0	7.6	5.2	8.2	5.2	8.3	4.8
	29	4.8	4.1	5.7	4.6	6.6	5.0	7.1	5.0	7.6	5.2	8.1	5.2	8.2	4.7
	31	4.8	4.1	5.7	4.6	6.6	5.0	7.1	5.0	7.6	5.2	8.0	5.1	8.1	4.6
	33	4.8	4.1	5.7	4.6	6.6	5.0	7.1	5.0	7.6	5.2	7.8	5.0	7.9	4.6
	35	4.8	4.1	5.7	4.6	6.6	5.0	7.1	5.0	7.6	5.2	7.7	4.9	7.8	4.5
	37	4.8	4.1	5.7	4.6	6.6	5.0	7.1	5.0	7.4	5.1	7.5	4.8	7.7	4.4
	39	4.8	4.1	5.7	4.6	6.6	5.0	7.1	5.0	7.2	5.0	7.4	4.7	7.6	4.4

Notes:

TC: Total Capacity(kW)

SHC: Sensible Heat Capacity(kW)

1. Capacity tables show the representative value of conditions which may occur.
2. Refer to Capacity Correction Factor in the outdoor unit PDB for the actual performance data of each indoor unit and outdoor unit combination.

6. Capacity Tables

6.2 Heating Capacity

Cooling capacity

Capacity Index	Outdoor air temp.		Indoor air temp. (DB, °C)					
			16	18	20	21	22	24
	DB(°C)	WB(°C)	TC	TC	TC	TC	TC	TC
			kW	kW	kW	kW	kW	kW
2.2	-24.8	-25.0	1.4	1.4	1.4	1.4	1.4	1.4
	-21.8	-22.0	1.7	1.7	1.7	1.7	1.7	1.7
	-19.8	-20.0	1.8	1.8	1.8	1.8	1.8	1.8
	-18.8	-19.0	1.9	1.9	1.9	1.9	1.9	1.9
	-16.7	-17.0	2.0	2.0	2.0	2.0	2.0	2.0
	-14.7	-15.0	2.1	2.1	2.1	2.1	2.1	2.0
	-12.6	-13.0	2.2	2.2	2.2	2.2	2.1	2.1
	-10.5	-11.0	2.3	2.3	2.2	2.2	2.2	2.2
	-9.5	-10.0	2.3	2.3	2.3	2.3	2.3	2.2
	-8.5	-9.1	2.3	2.3	2.3	2.3	2.3	2.2
	-7.0	-7.6	2.4	2.4	2.4	2.4	2.3	2.2
	-5.0	-5.6	2.5	2.5	2.5	2.4	2.3	2.2
	-3.0	-3.7	2.6	2.6	2.5	2.4	2.3	2.2
	0.0	-0.7	2.7	2.6	2.5	2.4	2.3	2.2
	3.0	2.2	2.7	2.7	2.5	2.4	2.3	2.2
	5.0	4.1	2.8	2.7	2.5	2.4	2.3	2.2
	7.0	6.0	2.8	2.7	2.5	2.4	2.3	2.2
	9.0	7.9	2.8	2.7	2.5	2.4	2.3	2.2
	11.0	9.8	2.8	2.7	2.5	2.4	2.3	2.2
	13.0	11.8	2.8	2.7	2.5	2.4	2.3	2.2
	15.0	13.7	2.8	2.7	2.5	2.4	2.3	2.2
2.8	-24.8	-25.0	1.9	1.9	1.8	1.8	1.8	1.8
	-21.8	-22.0	2.2	2.2	2.2	2.2	2.2	2.2
	-19.8	-20.0	2.4	2.4	2.3	2.3	2.3	2.3
	-18.8	-19.0	2.4	2.4	2.4	2.4	2.4	2.4
	-16.7	-17.0	2.5	2.5	2.5	2.5	2.5	2.5
	-14.7	-15.0	2.7	2.7	2.6	2.6	2.6	2.6
	-12.6	-13.0	2.8	2.8	2.8	2.8	2.7	2.7
	-10.5	-11.0	2.9	2.9	2.9	2.9	2.9	2.8
	-9.5	-10.0	3.0	3.0	2.9	2.9	2.9	2.8
	-8.5	-9.1	3.0	3.0	3.0	3.0	3.0	2.8
	-7.0	-7.6	3.1	3.1	3.1	3.1	3.0	2.8
	-5.0	-5.6	3.2	3.2	3.2	3.1	3.0	2.8
	-3.0	-3.7	3.4	3.3	3.2	3.1	3.0	2.8
	0.0	-0.7	3.4	3.3	3.2	3.1	3.0	2.8
	3.0	2.2	3.5	3.4	3.2	3.1	3.0	2.8
	5.0	4.1	3.6	3.4	3.2	3.1	3.0	2.8
	7.0	6.0	3.6	3.4	3.2	3.1	3.0	2.8
	9.0	7.9	3.6	3.4	3.2	3.1	3.0	2.8
	11.0	9.8	3.6	3.4	3.2	3.1	3.0	2.8
	13.0	11.8	3.6	3.4	3.2	3.1	3.0	2.8
	15.0	13.7	3.6	3.4	3.2	3.1	3.0	2.8
3.6	-24.8	-25.0	2.3	2.3	2.3	2.3	2.3	2.3
	-21.8	-22.0	2.8	2.8	2.8	2.8	2.8	2.8
	-19.8	-20.0	2.9	2.9	2.9	2.9	2.9	2.9
	-18.8	-19.0	3.0	3.0	3.0	3.0	3.0	3.0
	-16.7	-17.0	3.1	3.1	3.1	3.1	3.1	3.1
	-14.7	-15.0	3.3	3.3	3.3	3.3	3.3	3.3
	-12.6	-13.0	3.5	3.4	3.4	3.4	3.4	3.4
	-10.5	-11.0	3.6	3.6	3.6	3.6	3.6	3.5
	-9.5	-10.0	3.7	3.7	3.7	3.7	3.7	3.5
	-8.5	-9.1	3.8	3.8	3.7	3.7	3.7	3.5
	-7.0	-7.6	3.9	3.9	3.9	3.8	3.7	3.5
	-5.0	-5.6	4.0	4.0	4.0	3.9	3.7	3.5
	-3.0	-3.7	4.2	4.1	4.0	3.9	3.7	3.5
	0.0	-0.7	4.3	4.1	4.0	3.9	3.7	3.5
	3.0	2.2	4.4	4.3	4.0	3.9	3.7	3.5
	5.0	4.1	4.5	4.3	4.0	3.9	3.7	3.5
	7.0	6.0	4.5	4.3	4.0	3.9	3.7	3.5
	9.0	7.9	4.5	4.3	4.0	3.9	3.7	3.5
	11.0	9.8	4.5	4.3	4.0	3.9	3.7	3.5
	13.0	11.8	4.5	4.3	4.0	3.9	3.7	3.5
	15.0	13.7	4.5	4.3	4.0	3.9	3.7	3.5

Notes:
TC: Total Capacity(kW)
SHC: Sensible Heat Capacity(kW)
1. Capacity tables show the representative value of conditions which may occur.
2. Refer to Capacity Correction Factor in the outdoor unit PDB for the actual performance data of each indoor unit and outdoor unit combination.

6. Capacity Tables

Heating capacity

Capacity Index	Outdoor air temp.		Indoor air temp. (DB, °C)					
			16	18	20	21	22	24
	DB(°C)	WB(°C)	TC	TC	TC	TC	TC	TC
			kW	kW	kW	kW	kW	kW
4.5	-24.8	-25.0	2.9	2.9	2.9	2.9	2.9	2.9
	-21.8	-22.0	3.5	3.5	3.5	3.5	3.5	3.5
	-19.8	-20.0	3.7	3.7	3.7	3.7	3.7	3.6
	-18.8	-19.0	3.8	3.7	3.7	3.7	3.7	3.7
	-16.7	-17.0	3.9	3.9	3.9	3.9	3.9	3.9
	-14.7	-15.0	4.1	4.1	4.1	4.1	4.1	4.1
	-12.6	-13.0	4.3	4.3	4.3	4.3	4.3	4.3
	-10.5	-11.0	4.5	4.5	4.5	4.5	4.5	4.4
	-9.5	-10.0	4.6	4.6	4.6	4.6	4.6	4.4
	-8.5	-9.1	4.7	4.7	4.7	4.7	4.7	4.4
	-7.0	-7.6	4.8	4.8	4.8	4.8	4.7	4.4
	-5.0	-5.6	5.0	5.0	5.0	4.8	4.7	4.4
	-3.0	-3.7	5.3	5.1	5.0	4.8	4.7	4.4
	0.0	-0.7	5.3	5.2	5.0	4.8	4.7	4.4
	3.0	2.2	5.5	5.3	5.0	4.8	4.7	4.4
	5.0	4.1	5.6	5.3	5.0	4.8	4.7	4.4
	7.0	6.0	5.6	5.3	5.0	4.8	4.7	4.4
	9.0	7.9	5.6	5.3	5.0	4.8	4.7	4.4
	11.0	9.8	5.6	5.3	5.0	4.8	4.7	4.4
	13.0	11.8	5.6	5.3	5.0	4.8	4.7	4.4
	15.0	13.7	5.6	5.3	5.0	4.8	4.7	4.4
5.6	-24.8	-25.0	3.6	3.6	3.6	3.6	3.6	3.6
	-21.8	-22.0	4.4	4.4	4.4	4.4	4.4	4.4
	-19.8	-20.0	4.6	4.6	4.6	4.6	4.6	4.6
	-18.8	-19.0	4.8	4.7	4.7	4.7	4.7	4.7
	-16.7	-17.0	5.0	5.0	5.0	4.9	4.9	4.9
	-14.7	-15.0	5.2	5.2	5.2	5.2	5.2	5.2
	-12.6	-13.0	5.5	5.4	5.4	5.4	5.4	5.4
	-10.5	-11.0	5.7	5.7	5.7	5.7	5.7	5.5
	-9.5	-10.0	5.8	5.8	5.8	5.8	5.8	5.5
	-8.5	-9.1	5.9	5.9	5.9	5.9	5.9	5.5
	-7.0	-7.6	6.1	6.1	6.1	6.0	5.9	5.5
	-5.0	-5.6	6.3	6.3	6.3	6.1	5.9	5.5
	-3.0	-3.7	6.6	6.5	6.3	6.1	5.9	5.5
	0.0	-0.7	6.7	6.5	6.3	6.1	5.9	5.5
	3.0	2.2	6.9	6.7	6.3	6.1	5.9	5.5
	5.0	4.1	7.0	6.7	6.3	6.1	5.9	5.5
	7.0	6.0	7.1	6.7	6.3	6.1	5.9	5.5
	9.0	7.9	7.1	6.7	6.3	6.1	5.9	5.5
	11.0	9.8	7.1	6.7	6.3	6.1	5.9	5.5
	13.0	11.8	7.1	6.7	6.3	6.1	5.9	5.5
	15.0	13.7	7.1	6.7	6.3	6.1	5.9	5.5
7.1	-24.8	-25.0	4.6	4.6	4.6	4.6	4.6	4.6
	-21.8	-22.0	5.6	5.6	5.6	5.6	5.6	5.5
	-19.8	-20.0	5.9	5.9	5.9	5.9	5.9	5.8
	-18.8	-19.0	6.0	6.0	6.0	6.0	6.0	6.0
	-16.7	-17.0	6.3	6.3	6.3	6.3	6.3	6.3
	-14.7	-15.0	6.6	6.6	6.6	6.6	6.6	6.6
	-12.6	-13.0	6.9	6.9	6.9	6.9	6.9	6.9
	-10.5	-11.0	7.2	7.2	7.2	7.2	7.2	7.0
	-9.5	-10.0	7.4	7.4	7.3	7.3	7.3	7.0
	-8.5	-9.1	7.5	7.5	7.5	7.5	7.5	7.0
	-7.0	-7.6	7.7	7.7	7.7	7.7	7.5	7.0
	-5.0	-5.6	8.0	8.0	8.0	7.7	7.5	7.0
	-3.0	-3.7	8.4	8.2	8.0	7.7	7.5	7.0
	0.0	-0.7	8.6	8.3	8.0	7.7	7.5	7.0
	3.0	2.2	8.8	8.5	8.0	7.7	7.5	7.0
	5.0	4.1	8.9	8.5	8.0	7.7	7.5	7.0
	7.0	6.0	9.0	8.5	8.0	7.7	7.5	7.0
	9.0	7.9	9.0	8.5	8.0	7.7	7.5	7.0
	11.0	9.8	9.0	8.5	8.0	7.7	7.5	7.0
	13.0	11.8	9.0	8.5	8.0	7.7	7.5	7.0
	15.0	13.7	9.0	8.5	8.0	7.7	7.5	7.0

Notes:

TC: Total Capacity(kW)

1. Capacity tables show the representative value of conditions which may occur.
2. is shown as reference. When selecting the outdoor units, avoid the outdoor air temperature range shown by .
3. In accordance with operation limits of outdoor unit, applicable range of capacity tables is different.
4. Refer to Capacity Correction Factor in the outdoor unit PDB for the actual performance data of each indoor unit and outdoor unit combination.

7. External Static Pressure (E.S.P) & Air Flow

ARNU07GB3G4+PBSGB30(Acc'y), PBSC30(Acc'y)
ARNU09GB3G4+PBSGB30(Acc'y), PBSC30(Acc'y)
ARNU12GB3G4+PBSGB30(Acc'y), PBSC30(Acc'y)
ARNU15GB3G4+PBSGB30(Acc'y), PBSC30(Acc'y)

(Unit: CMM)

Setting Value	Static Pressure(mmAq(Pa))				
	0(0)	1(10)	2(20)	3(29)	4(39)
60	6.29	3.03	0.93	-	-
65	6.61	4.84	1.52	-	-
70	7.69	5.64	2.18	0.79	-
75	8.19	6.28	2.81	0.85	-
80	8.91	7.43	4.96	1.58	-
85	9.51	8.14	5.91	2.75	0.95
90	10.21	8.76	6.79	3.41	1.36
95	10.83	9.62	8.11	5.48	2.61
100	11.31	10.55	9.02	6.12	3.31
105	11.84	11.19	9.99	8.28	5.32
110	12.68	11.88	10.38	9.16	6.92
115	13.19	12.22	11.55	10.21	8.23

Note :

1. The above table shows the correlation between the air rates and E.S.P.
2. E.S.P. is given after subtracting coil losses motor step factory installed
3. E.S.P. can be higher than the maximum given in the table, but the unit faces the problem of freezing the coil.

Fan Performance

ARNU07GB3G4, ARNU09GB3G4, ARNU12GB3G4, ARNU15GB3G4

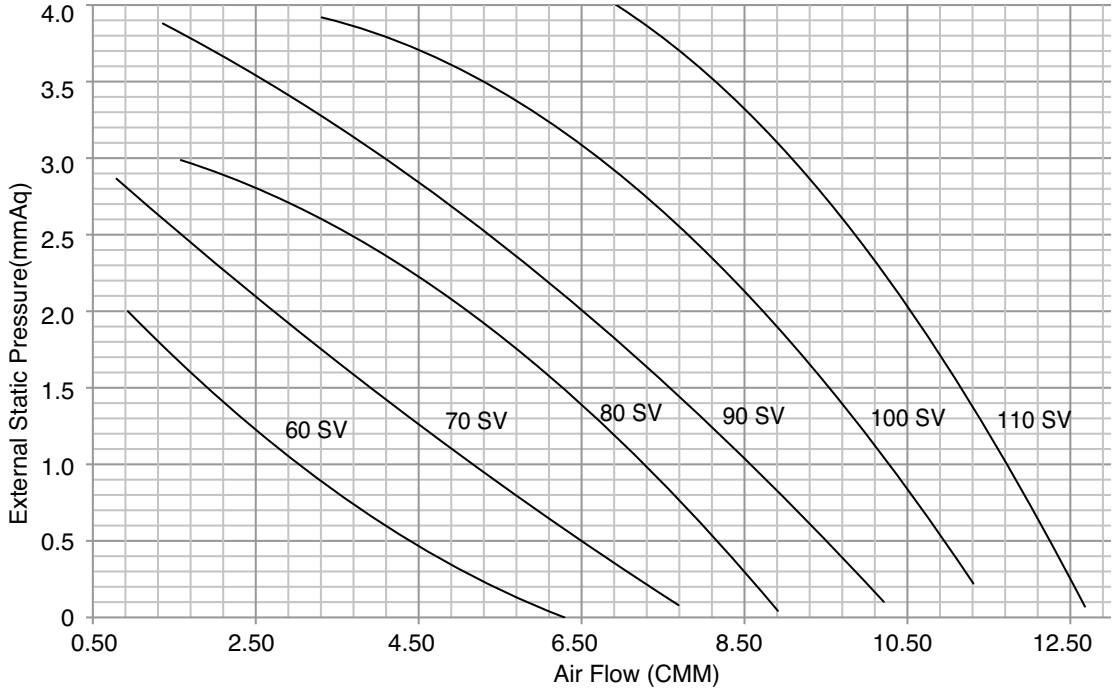

7. External Static Pressure (E.S.P) & Air Flow

ARNU18GB4G4+PBSGB40(Acc'y), PBSC40(Acc'y)
ARNU24GB4G4+PBSGB40(Acc'y), PBSC40(Acc'y)

(Unit: CMM)

Setting Value	Static Pressure(mmAq(Pa))				
	0(0)	1(10)	2(20)	3(29)	4(39)
75	10.32	7.68	3.55	-	-
80	11.06	8.77	4.71	1.38	-
85	11.84	10.02	6.95	2.16	-
90	12.73	10.74	8.26	4.73	1.25
95	13.47	12.13	9.93	6.74	2.73
100	14.16	13.25	10.51	8.41	3.65
105	15.29	14.11	12.31	9.83	6.21
110	16.09	14.77	13.49	10.39	8.32
115	16.91	15.88	14.48	12.77	9.92
120	17.81	16.88	15.15	13.98	10.85
125	18.55	17.84	16.12	15.13	12.97
130	19.01	18.55	17.33	16.28	14.59

Note :

1. The above table shows the correlation between the air rates and E.S.P.
2. E.S.P. is given after subtracting coil losses motor step factory installed
3. E.S.P. can be higher than the maximum given in the table, but the unit faces the problem of freezing the coil.

Fan Performance

ARNU18GB4G4, ARNU24GB4G4

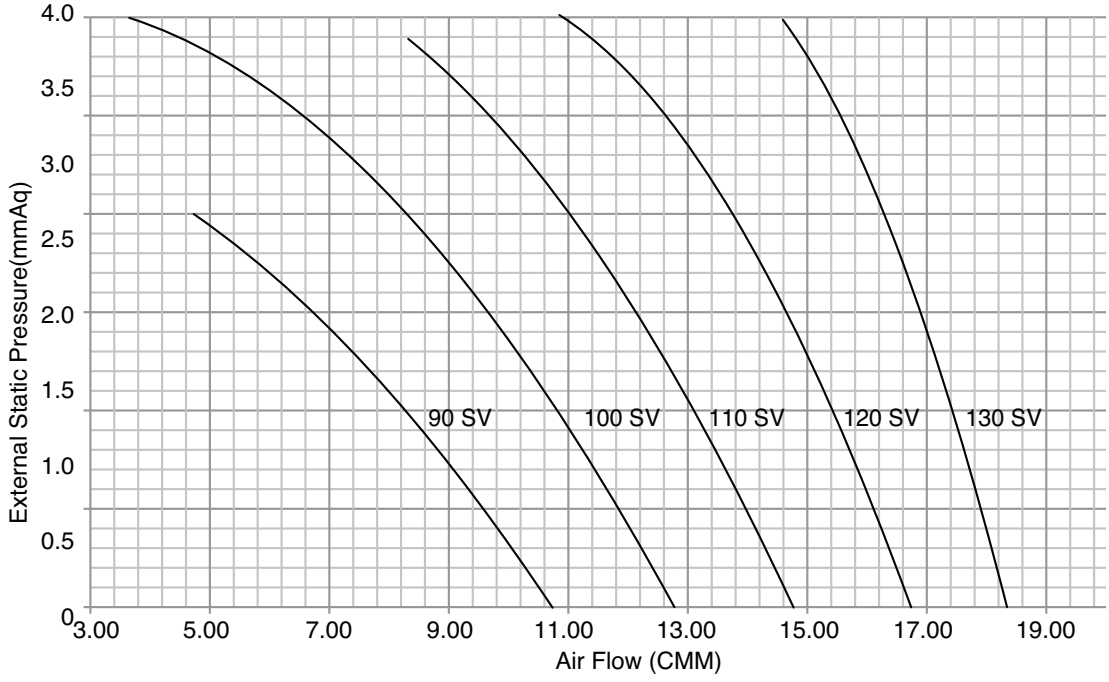

7. External Static Pressure (E.S.P) & Air Flow

ARNU07GB3G4+PBSGB30(Acc'y), PBSC30(Acc'y)
ARNU09GB3G4+PBSGB30(Acc'y), PBSC30(Acc'y)
ARNU12GB3G4+PBSGB30(Acc'y), PBSC30(Acc'y)
ARNU15GB3G4+PBSGB30(Acc'y), PBSC30(Acc'y)

Capacity	Mode		Set value	Standard ESP(mmAq(Pa))	CMM	Lower Limit of External Static Pressure(mmAq(Pa))	Upper Limit of External Static Pressure(mmAq(Pa))
7k	High (factory set)	HI	94	2(20)	8	-	4(39)
		Mid	88		6.5		
		Low	83		5.5		
	Standard	HI	74	0(0)	8	-	4(39)
		Mid	62		6.5		
		Low	56		5.5		
9k	High (factory set)	HI	99	2(20)	9	-	4(39)
		Mid	89		7		
		Low	85		6		
	Standard	HI	82	0(0)	9	-	4(39)
		Mid	66		7		
		Low	58		6		
12k	High (factory set)	HI	105	2(20)	10	-	4(39)
		Mid	94		8		
		Low	88		6.5		
	Standard	HI	90	0(0)	10	-	4(39)
		Mid	74		8		
		Low	62		6.5		
15k	High (factory set)	HI	110	2(20)	11	-	4(39)
		Mid	105		10		
		Low	94		8		
	Standard	HI	96	0(0)	11	-	4(39))
		Mid	90		10		
		Low	74		8		

ARNU18GB4G4+PBSGB40(Acc'y), PBSC40(Acc'y)
ARNU24GB4G4+PBSGB40(Acc'y), PBSC40(Acc'y)

Capacity	Mode		Set value	Standard ESP(mmAq(Pa))	CMM	Lower Limit of External Static Pressure(mmAq(Pa))	Upper Limit of External Static Pressure(mmAq(Pa))
18k	High (factory set)	HI	115	2(20)	14	-	4(39)
		Mid	103		12		
		Low	93		10		
	Standard	HI	100	0(0)	14	-	4(39)
		Mid	86		12		
		Low	74		10		
24k	High (factory set)	HI	128	2(20)	17	-	4(39)
		Mid	118		15		
		Low	93		10		
	Standard	HI	116	0(0)	17	-	4(39)
		Mid	104		15		
		Low	74		10		

8. Electric Characteristics

Units					Power Supply		IFM		Input(W)	
Model	Type	Hz	Volts	Voltage Range	MCA	MFA	kW	FLA	Cooling	Heating
ARNU07GB3G4+PBSGB30(Acc'y), PBSC30(Acc'y)	B3	50	220-240	Max:264 Min:198	1.00	15	0.024	0.76	85	85
ARNU09GB3G4+PBSGB30(Acc'y), PBSC30(Acc'y)	B3				1.00	15	0.024	0.76	85	85
ARNU12GB3G4+PBSGB30(Acc'y), PBSC30(Acc'y)	B3				1.00	15	0.024	0.76	85	85
ARNU15GB3G4+PBSGB30(Acc'y), PBSC30(Acc'y)	B3				1.00	15	0.024	0.76	85	85
ARNU18GB4G4+PBSGB40(Acc'y), PBSC40(Acc'y)	B4				1.20	15	0.038	0.97	115	115
ARNU24GB4G4+PBSGB40(Acc'y), PBSC40(Acc'y)	B4				1.20	15	0.038	0.97	115	115
ARNU07GB3G4+PBSGB30(Acc'y), PBSC30(Acc'y)	B3	60	220	Max:242 Min:198	1.00	15	0.024	0.76	85	85
ARNU09GB3G4+PBSGB30(Acc'y), PBSC30(Acc'y)	B3				1.00	15	0.024	0.76	85	85
ARNU12GB3G4+PBSGB30(Acc'y), PBSC30(Acc'y)	B3				1.00	15	0.024	0.76	85	85
ARNU15GB3G4+PBSGB30(Acc'y), PBSC30(Acc'y)	B3				1.00	15	0.024	0.76	85	85
ARNU18GB4G4+PBSGB40(Acc'y), PBSC40(Acc'y)	B4				1.20	15	0.038	0.97	115	115
ARNU24GB4G4+PBSGB40(Acc'y), PBSC40(Acc'y)	B4				1.20	15	0.038	0.97	115	115

Symbols:

MCA : Min, Circuit Amps(A)

MFA : Max. Fuse Amps(see note 5)

kW : Fan Motor Rated Output(kW)

FLA : Full Load Amps(A)

IFA : Indoor Fan Motor

Note :

1. Voltage range
   Units are suitable for use on electrical systems where voltage supplied to unit terminals is not below or above listed range limits,
2. Maximum allowable voltage unbalance between phases is 2%
3. MCA/MFA
   MCA=1.25 x FLA
   MFA≤ 4 x FLA
   (Next lower standard fuse rating. Min. 15A)
4. Select wire size based on the MCA
5. Instead of fuse, use Circuit Breaker.

9. Sound Levels

9.1 Sound Pressure Levels

Overall

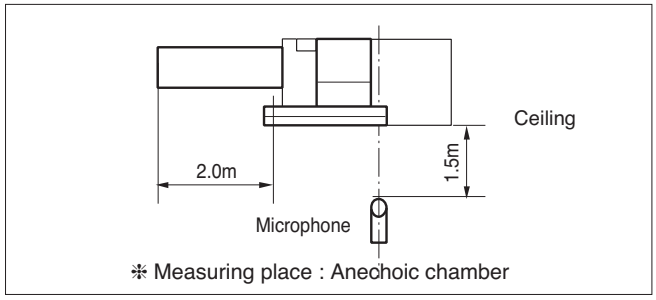

Notes:

1. Sound measured at 1.5m away from the center of the unit
2. Operating conditionl
   - Power source : 220-240V 50Hz / 220V 60Hz
   - Cooling : Indoor temperature (27°C DB, 19°C WB), Outdoor temperature (35°C DB, 24°C WB)
   - Heating : Indoor temperature (20°C DB, 15°C WB), Outdoor temperature (7°C DB, 6°C WB)
3. Reference accoustic pressure 0dB = 20μPa
4. Sound level will vary depending on a range of factors such as the construction(acoustic absorption coefficient) of particular room in which the equipment in installed.

Model	Sound Pressure Levels dB(A)		
	H	M	L
ARNU07GB3G4+PBSGB30(Acc'y), PBSC30(Acc'y)	33	32	29
ARNU09GB3G4+PBSGB30(Acc'y), PBSC30(Acc'y)	34	33	32
ARNU12GB3G4+PBSGB30(Acc'y), PBSC30(Acc'y)	35	34	33
ARNU15GB3G4+PBSGB30(Acc'y), PBSC30(Acc'y)	41	40	37
ARNU18GB4G4+PBSGB40(Acc'y), PBSC40(Acc'y)	43	40	37
ARNU24GB4G4+PBSGB40(Acc'y), PBSC40(Acc'y)	46	43	37

ARNU07GB3G4+PBSGB30 (Acc'y), PBSC30(Acc'y)

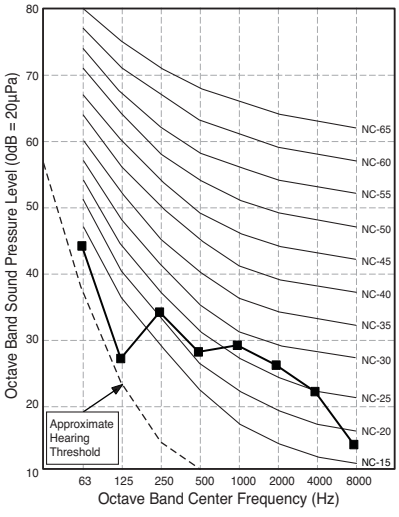

ARNU09GB3G4+PBSGB30 (Acc'y), PBSC30(Acc'y)

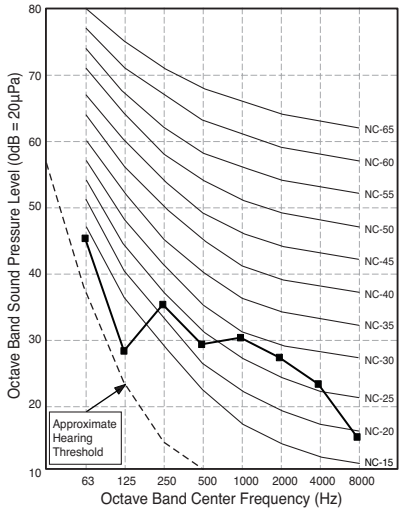

ARNU12GB3G4+PBSGB30 (Acc'y), PBSC30(Acc'y)

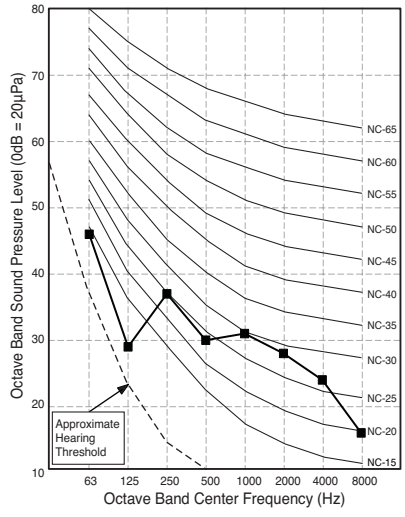

9. Sound Levels

ARNU15GB3G4+PBSGB30 (Acc'y), PBSC30(Acc'y)

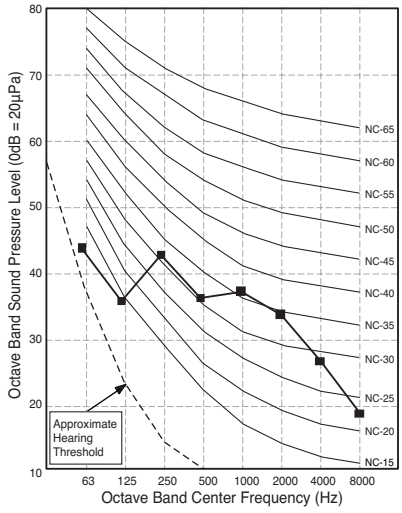

ARNU18GB4G4+PBSGB40 (Acc'y), PBSC40(Acc'y)

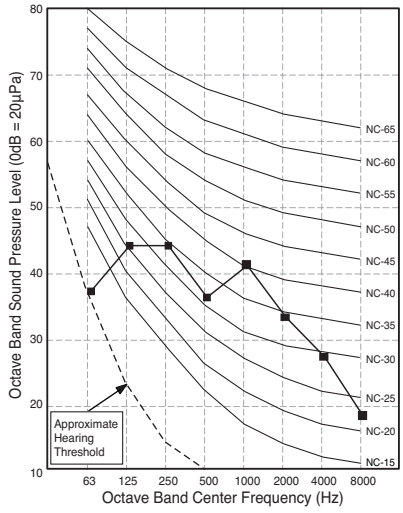

ARNU24GB4G4+PBSGB40 (Acc'y), PBSC40(Acc'y)

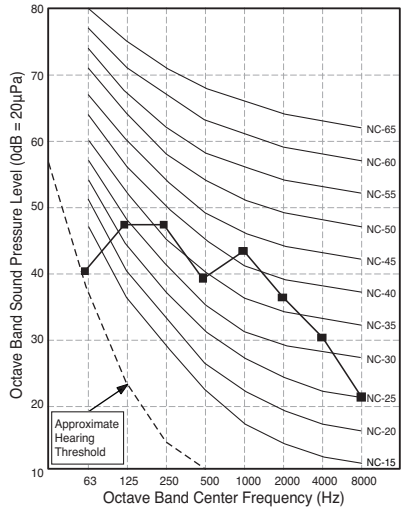

9. Sound Levels

9.2 Sound Power Levels

Model	Sound Power Levels dB(A)
	High Fan Speed
ARNU07GB3G4+PBSGB30(Acc'y), PBSC30(Acc'y)	53.0
ARNU09GB3G4+PBSGB30(Acc'y), PBSC30(Acc'y)	54.0
ARNU12GB3G4+PBSGB30(Acc'y), PBSC30(Acc'y)	55.0
ARNU15GB3G4+PBSGB30(Acc'y), PBSC30(Acc'y)	60.0
ARNU18GB4G4+PBSGB40(Acc'y), PBSC40(Acc'y)	61.0
ARNU24GB4G4+PBSGB40(Acc'y), PBSC40(Acc'y)	62.0

Notes:
- Data is valid at diffuse field condition
- Data is valid at nominal operating condition
- Sound level can be increased in static pressure mode or used air guide.
- Sound power level is measured on the rated condition(external static pressure of standard mode) in the reverberation rooms.
- Sound level will vary depending on a range of factors such as the construction (acoustic absorption coefficient) of particular room in which the equipment in installed.
- Reference acoustic intensity 0dB = 10E-6μW/m²

ARNU07GB3G4+PBSGB30 (Acc'y), PBSC30(Acc'y)

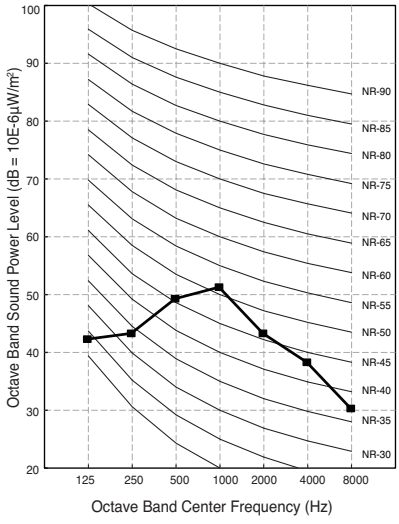

ARNU09GB3G4+PBSGB30 (Acc'y), PBSC30(Acc'y)

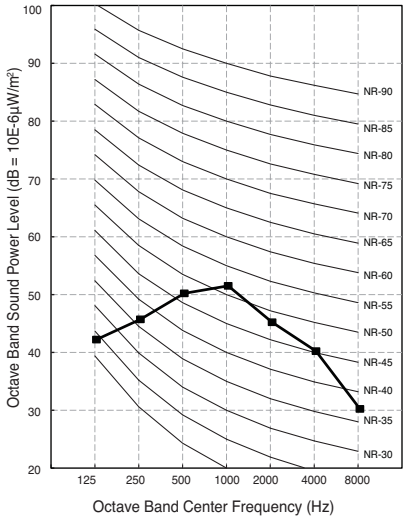

ARNU12GB3G4+PBSGB30 (Acc'y), PBSC30(Acc'y)

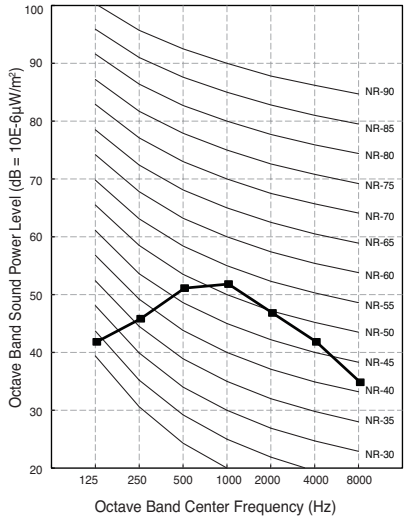

ARNU15GB3G4+PBSGB30 (Acc'y), PBSC30(Acc'y)

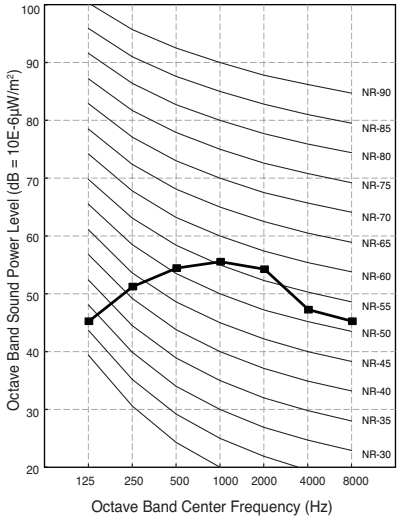

ARNU18GB4G4+PBSGB40 (Acc'y), PBSC40(Acc'y)

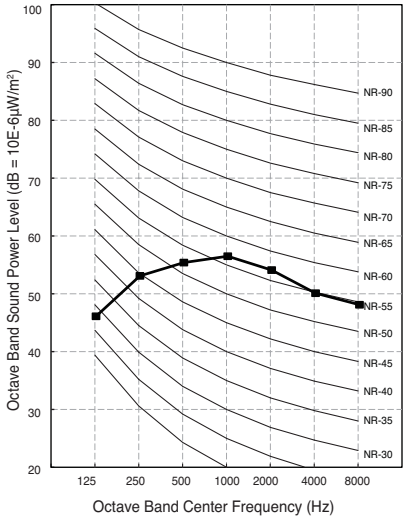

ARNU24GB4G4+PBSGB40 (Acc'y), PBSC40(Acc'y)

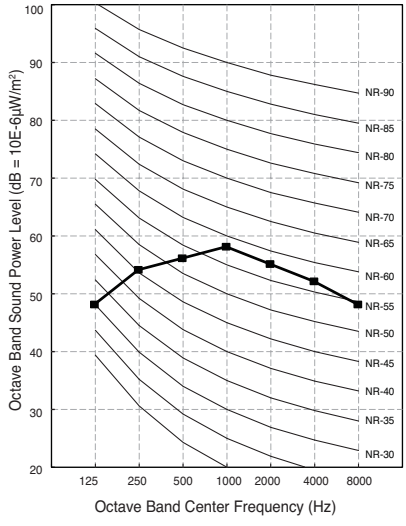

10. Installation

- Please read this instruction sheet completely before installing the product.
- When the power cord is damaged, replacement work shall be performed by authorized personnel only.
- Installation work must be performed in accordance with the national wiring standards by authorized personnel only.

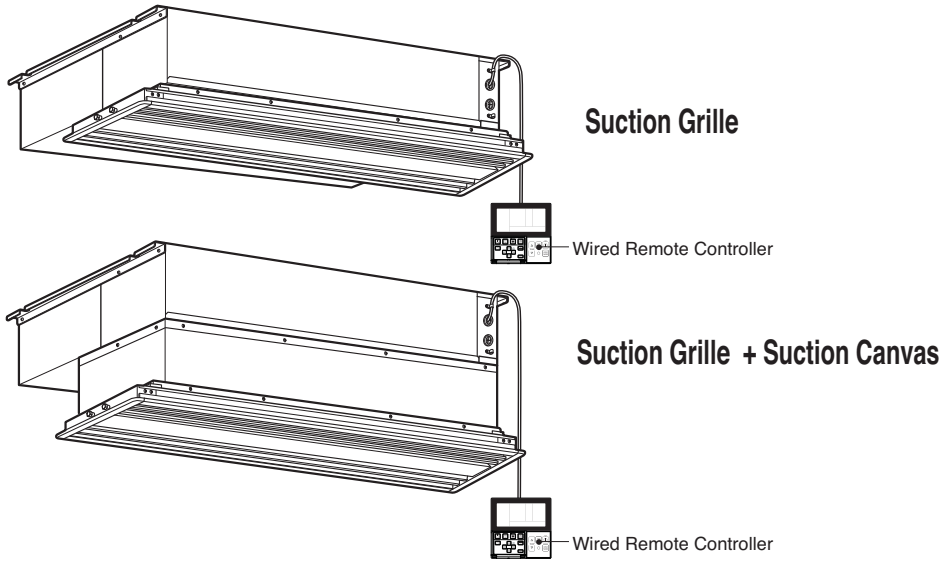

Required Parts

- Connecting cable
- Pipes: Gas side
  Liquid side
- Hanging Bolt
  (W 3/8 or M10 length 650mm)
- Insulated drain hose
- Additional Drain hose
  (Inner Dia .....25mm)

Required Tools

- Level
- Screw driver
- Electric drill
- Hole core drill (ø70mm)
- Flaring Tools set
- Torque Wrenches
- Hexagonal Wrench (4mm, 5mm)
- Gas-leak detector
- Owner's Manual
- Thermometer

10. Installation

10.1 Selection of the best location

Install the air conditioner in the location that satisfies the following conditions.

- The place shall easily bear a load exceeding four times the indoor unit's weight.
- The place shall be able to inspect the unit as the figure.
- The place where the unit shall be leveled.
- The place shall easily connect with the outdoor unit.
- The place where the unit is not affected by an electrical noise.
- The place where air circulation in the room will be good .
- There should not be any heat source or steam near the unit

Confirm the positional relationship between the unit and suspension bolts.

- Installation the ceiling opening to clean the filter or service under the product.

(Unit : mm)

Chassis	A	B
B3	600	900
B4	600	1100

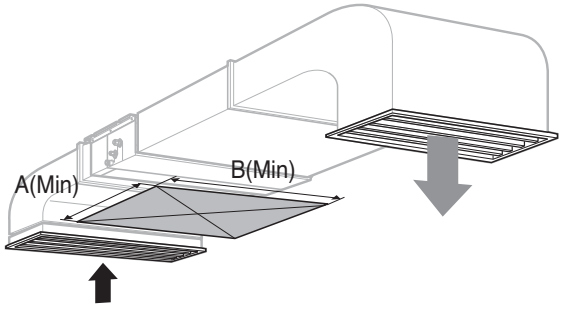

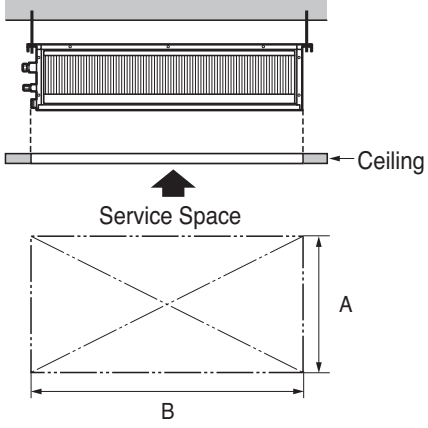

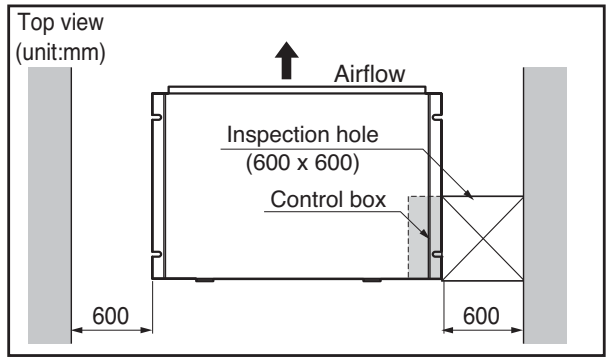

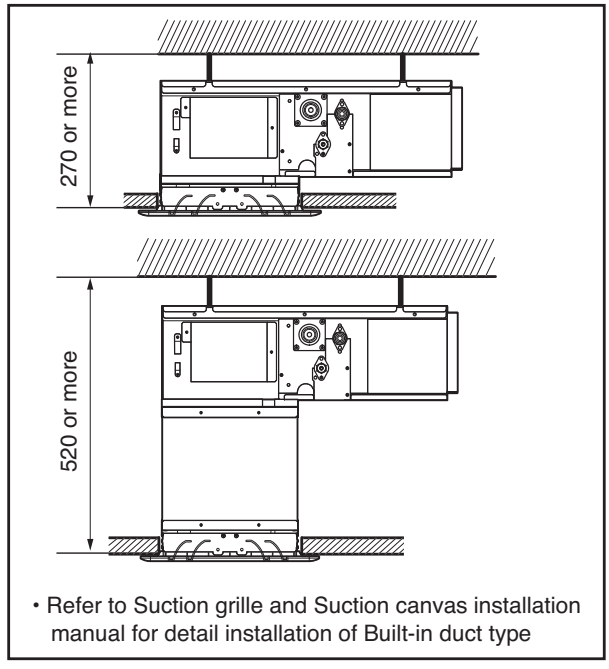

• Refer to Suction grille and Suction canvas installation manual for detail installation of Built-in duct type

B3/B4 Series : Built-in Duct type

10.2 Ceiling dimension and hanging bolt location

Installation of Unit

Install the unit above the ceiling correctly.

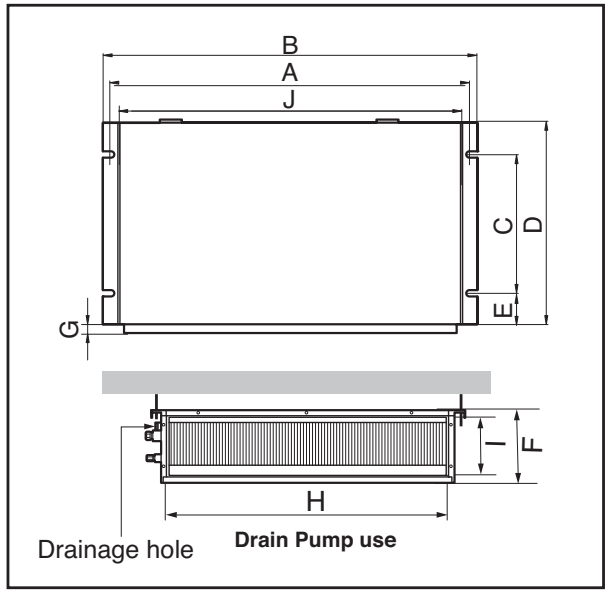

CASE 1

POSITION OF SUSPENSION BOLT

- Apply a joint-canvas between the unit and duct to absorb unnecessary vibration.
- Apply a filter Accessory at air return hole.

(Unit:mm)

Dimension / Chassis	A	B	C	D	E	F	G	H	I	J
B3	850	900	383	575	93	190	21	795	163	820
B4	1130	1180	383	575	93	190	21	1065	163	1100

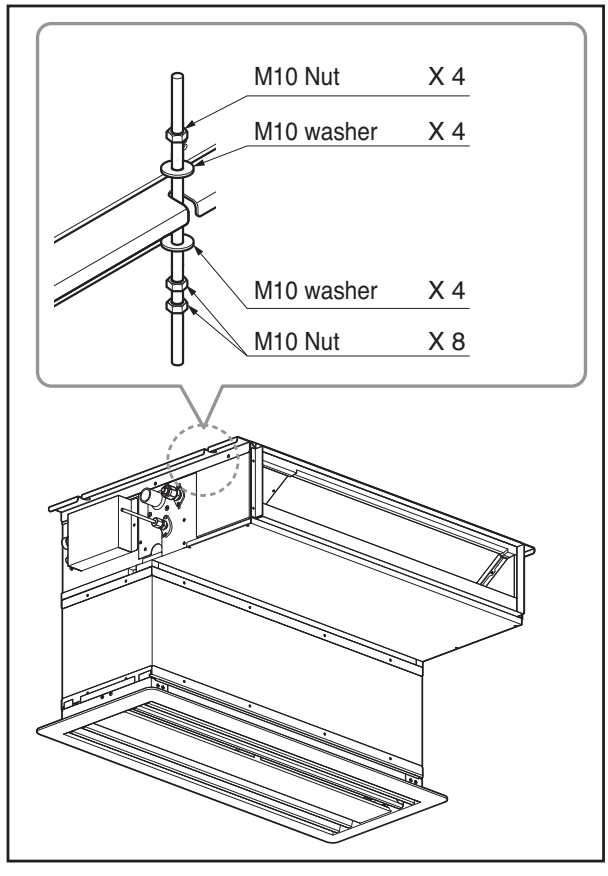

CASE 2

- Install the unit leaning to a drainage hole side as a figure for easy water drainage.

POSITION OF CONSOLE BOLT

- A place where the unit will be leveled and that can support the weight of the unit.
- A place where the unit can withstand its vibration.
- A place where service can be easily performed.

10. Installation

- Select and mark the position for fixing bolts.
- Drill the hole for set anchor on the face of ceiling.

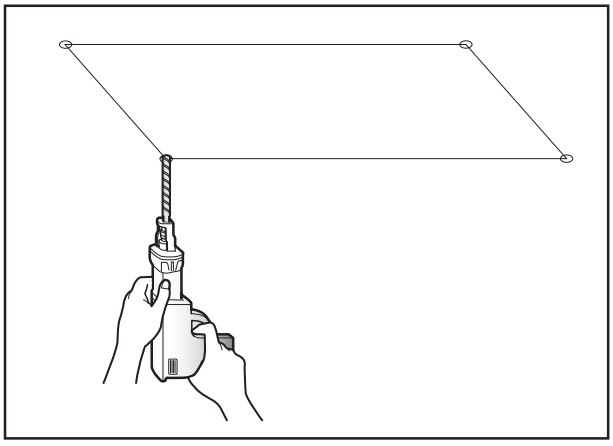

- Insert the set anchor and washer onto the suspension bolts for locking the suspension bolts on the ceiling.
- Mount the suspension bolts to the set anchor firmly.
- Secure the installation plates onto the suspension bolts (adjust level roughly) using nuts, washers and spring washers.

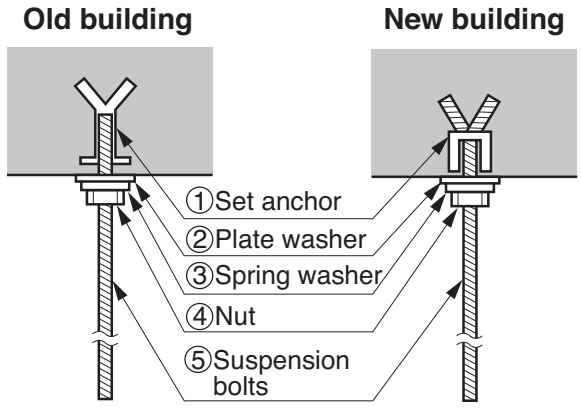

⚠ CAUTION

Tighten the nut and bolt to prevent unit falling.

10.3 Connecting Cables

Connect the wires to the terminals on the control board individually according to the outdoor unit connection.

- Ensure that the color of the wires of outdoor unit and the terminal No. are the same as those of indoor unit respectively

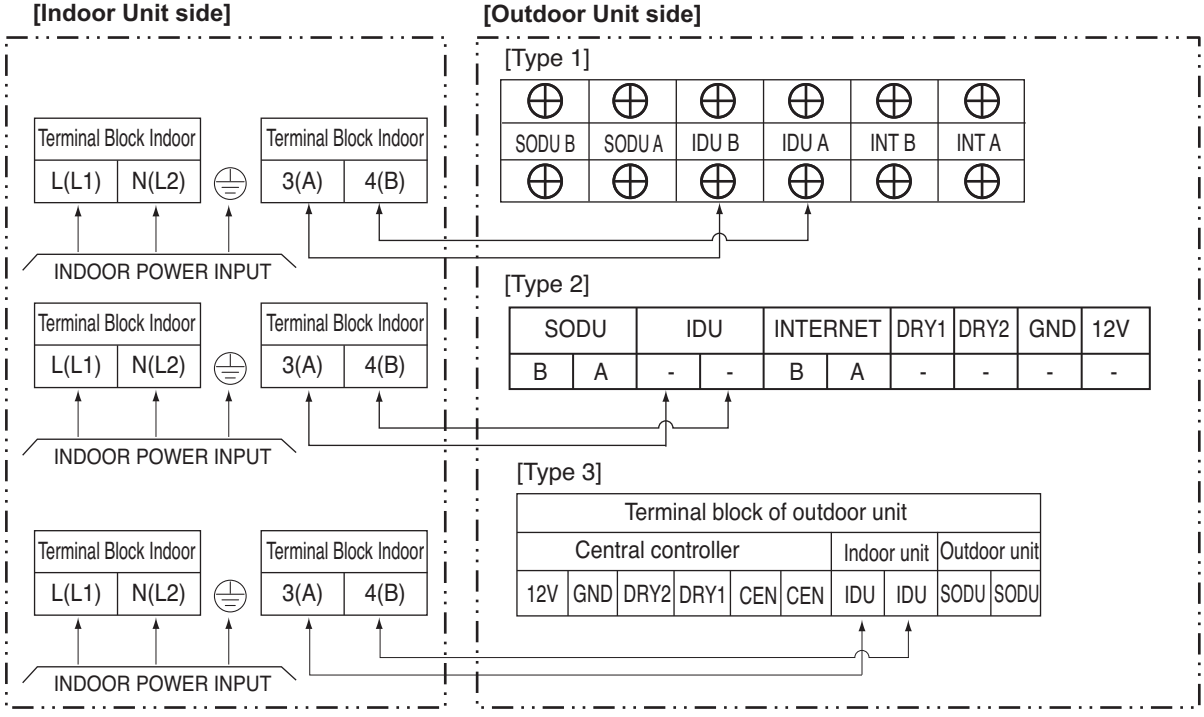

⚠ WARNING

Make sure that the screws of the terminal are not from loose.

Clamping of cables

1) Arrange 2 power cables on the control panel.
2) First, fasten the steel clamp with a screw to the inner boss of control panel.
3) For the cooling model, fix the other side of the clamp with a screw strongly. For the heat pump model, put the 0.75mm² cable(thinner cable) on the clamp and tighten it with a plastic clamp to the other boss of the control panel.

10.4 Part name and functions

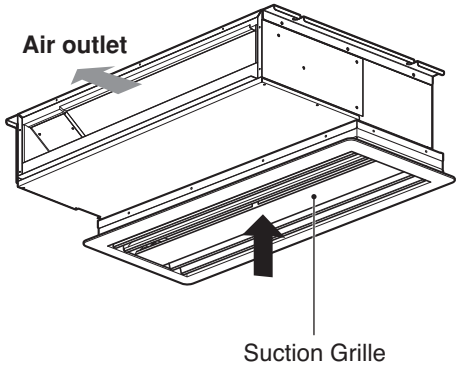

• Buit-in duct type with Suction Grille

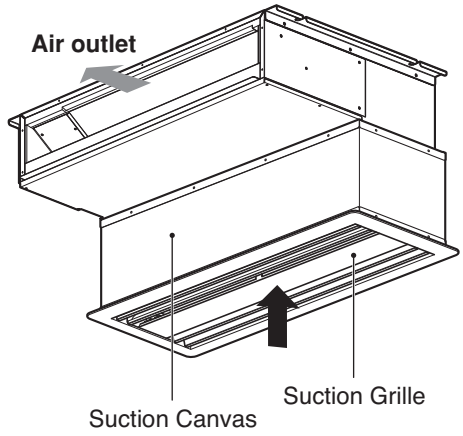

• Buit-in duct type with Suction Grille and Suction Canvas

■ B3/B4 Series : Built-in Duct type Control Box service

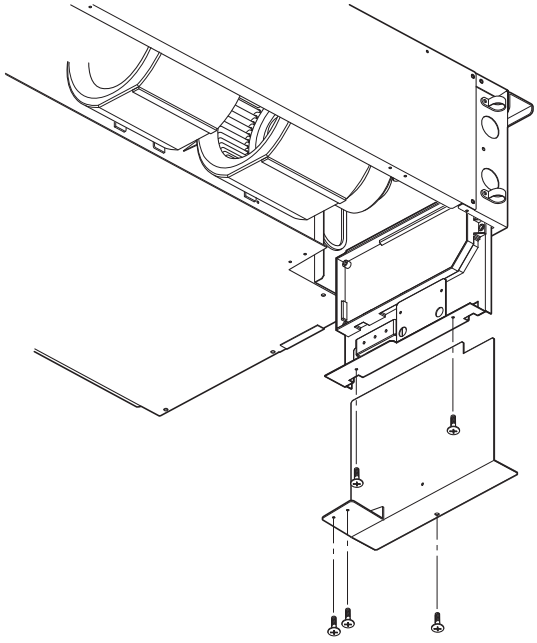

INSULATION, OTHERS

Insulate the joint and tubes completely.

THERMAL INSULATION All thermal insulation must comply with local requirement.

INDOOR UNIT

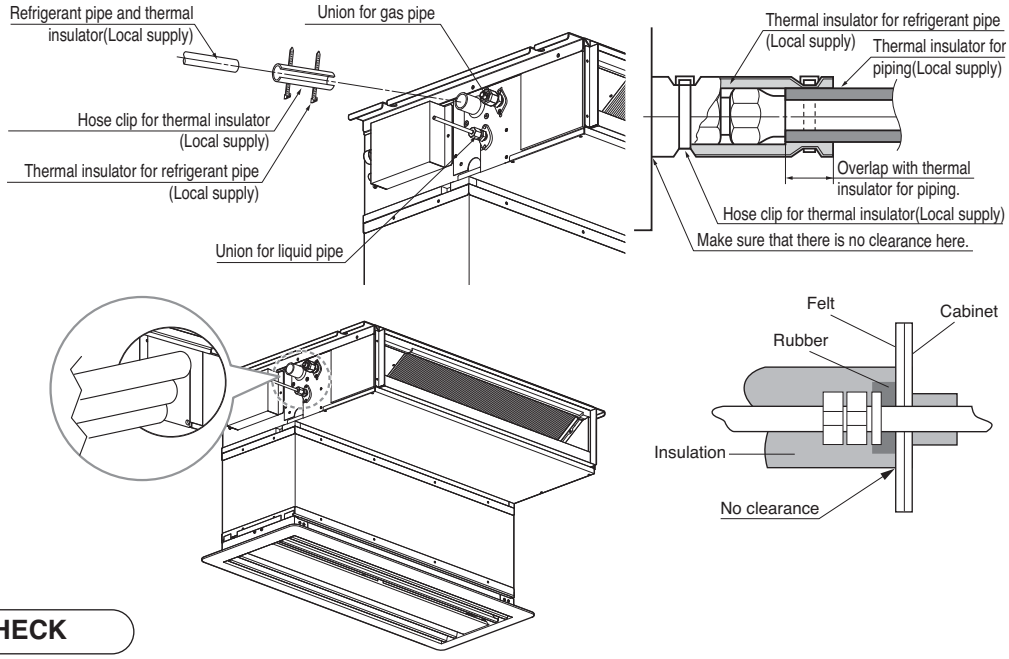

TEST AND CHECK

■ ***After all workings are finished, check the working and operation.***

- Air distribution ..... Is the air circulation good?
- Drain ..... Is the drainage smoothly and no sweating?
- Gas leakage ..... Is the piping connection correctly?
- Wiring ..... Is the wiring connection correctly?
- Lock-bolt ..... Is the lock-bolt of compressor loosened?
- Insulation Is the unit fully insulated?
- Ground Is the unit safely grounded?

10.5 Checking the Drainage

1. Remove the Air Filter.

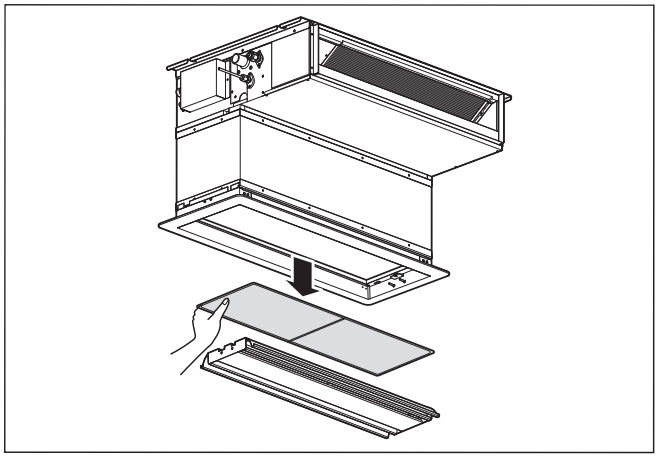

2. Check the drainage.

- Spray one or two glasses of water upon the evaporator.
- Ensure that water flows drain hose of indoor unit without any leakage.

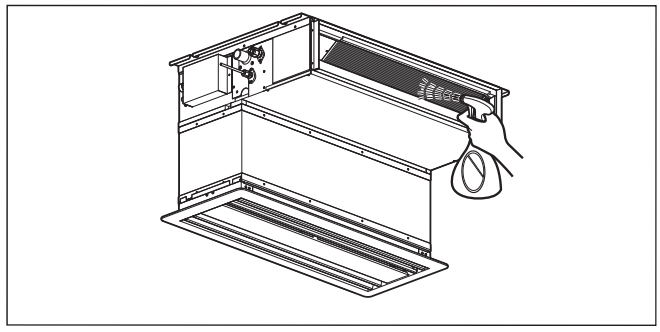

10. Installation

⚠ CAUTION

1. **Install declination** of the indoor unit is very **important for the drain** of the duct type air conditioner.
2. Minimum thickness of the insulation for the connecting pipe shall be 19mm.

Front of view

- The unit must be horizontal or declined to the drain hose connected when finished installation.

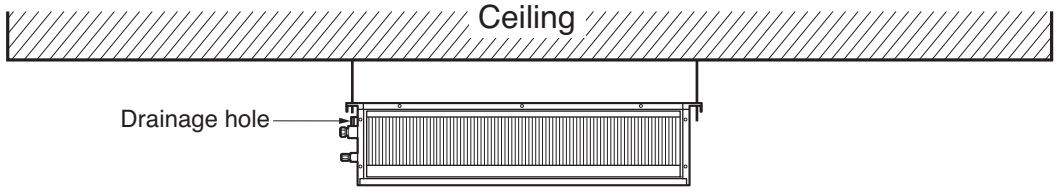

Drain Pump use

10.6 Drain Piping

- Drain piping must have down-slope (1/50 to 1/100): be sure not to provide up-and-down slope to prevent reversal flow.
- During drain piping connection, be careful not to exert extra force on the drain port on the indoor unit.
- The outside diameter of the drain connection on the indoor unit is 32mm.

Piping material: Polyvinyl chloride pipe VP-25 and pipe fittings

- Be sure to install heat insulation on the drain piping.

Heat insulation material: Polyethylene foam with thickness more than 8 mm.

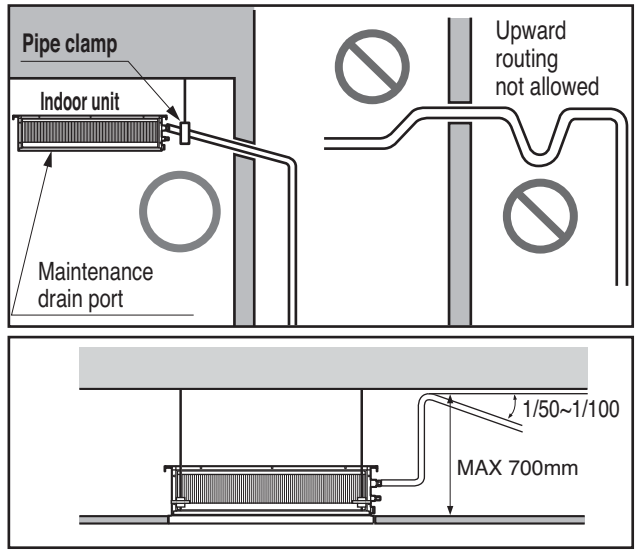

Drain test

The air conditioner uses a drain pump to drain water.
Use the following procedure to test the drain pump operation:

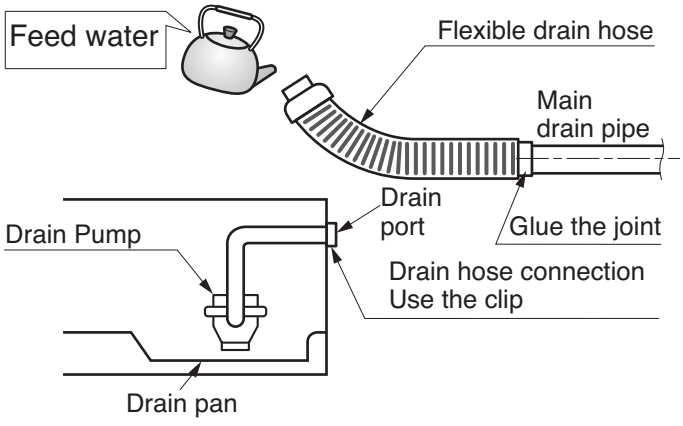

- Connect the main drain pipe to the exterior and leave it provisionally until the test comes to an end.
- Feed water to the flexible drain hose and check the piping for leakage.
- Be sure to check the drain pump for normal operating and noise when electrical wiring is complete.
- When the test is complete, connect the flexible drain hose to the drain port on the indoor unit.

10. Installation

CAUTION : The supplied flexible drain hose should not be curved, neither screwed. The curved or screwed hose may cause a leakage of water.

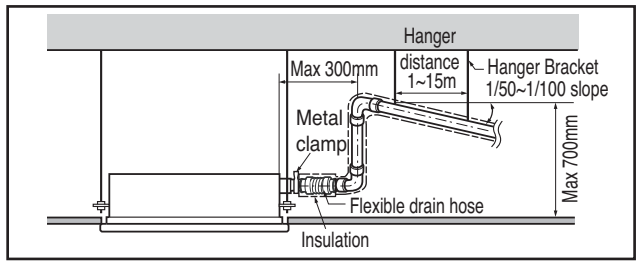

CAUTION:

After the confirmation of the above conditions, prepare the wiring as follows:

1) Never fail to have an individual power specialized for the air conditioner. As for the method of wiring, be guided by the circuit diagram posted on the inside of control box cover.

2) Provide a circuit breaker switch between power source and the unit.

3) The screws which fasten the wiring in the casing of electrical fittings are liable to come loose from vibrations to which the unit is subjected during the course of transportation. Check them and make sure that they are all tightly fastened. (If they are loose, it could give rise to burn-out of the wires.)

4) Specification of power source

5) Confirm that electrical capacity is sufficient.

6) Be sure that the starting voltage is maintained at more than 90 percent of the rated voltage marked on the name plate.

7) Confirm that the cable thickness is as specified in the power sources specification. (Particularly note the relation between cable length and thickness.)

8) Never fail to equip a leakage breaker where it is wet or moist.

9) The following troubles would be caused by voltage drop-down.
- Vibration of a magnetic switch, damage on the contact point, fuse breaking, disturbance by the normal function of an overload protection device.
- Proper starting power is not given to the compressor.

HAND OVER

Teach the customer the operation and maintenance procedures, using the operation manual.
(air filter cleaning, temperature control, etc.)

WIRED REMOTE CONTROLLER INSTALLATION

• Since the room temperature sensor is in the remote controller, the remote controller box should be installed in a place away from direct sunlight, high humidity and direct supply of cold air to maintain proper space temperature.
Install the remote controller about 5ft(1.5m) above the floor in an area with good air circulation at an average temperature.

Do not install the remote controller where it can be affected by:

- Drafts, or dead spots behind doors and in corners.
- Hot or cold air from ducts.
- Radiant heat from sun or appliances.
- Concealed pipes and chimneys.
- Uncontrolled areas such as an outside wall behind the remote controller.
- This remote controller is equipped with a seven segment LED. display. For proper display of the remote controller LED's, the remote controller should be installed properly as shown in Fig.1.
(The standard height is 1.2~1.5 m from floor level.)

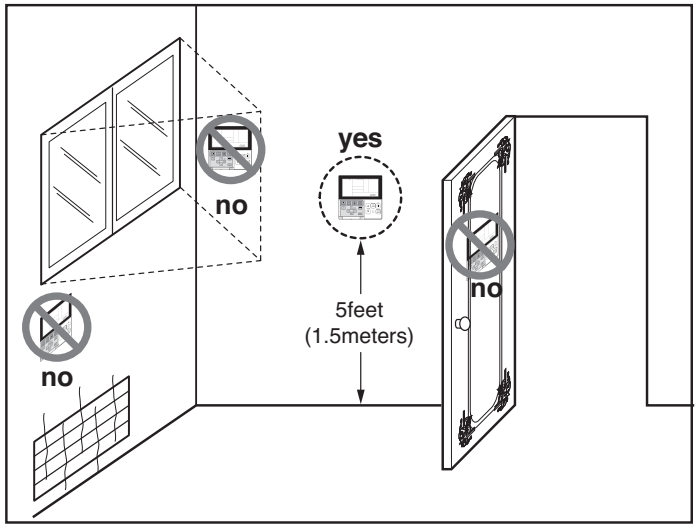

Fig.1 Typical locations for remote controller

11. Accessories

Standard Accessories

Name	Drain hose	Clamp metal	Washer for hanging backet	Clamp (Tie Wrap)	Insulation for fitting	(Other)
Quantity	1 EA	2 EA	8 EA	4 EA	1 SET	
Shape				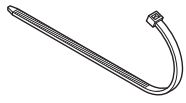	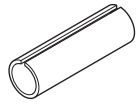 for gas pipe 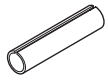 for liquid pipe	• Owner's manual • Installation manual

⚠ CAUTION

• Use only those accessories (Standard or optional) which have designated specilications.

MULTI V™ Indoor unit

Floor Standing

1. List of functions
2. Specifications
3. Dimensions
4. Piping Diagrams
5. Wiring Diagrams
6. Capacity Tables
7. Air Velocity and Temperature Distribution
8. Electric Characteristics
9. Sound Levels
10. Installation
11. Accessories

1. List of functions

Category	Function	ARNU07GCEA4, ARNU09GCEA4, ARNU12GCEA4 ARNU15GCEA4, ARNU18GCFA4, ARNU24GCFA4 ARNU07GCEU4, ARNU09GCEU4, ARNU12GCEU4 ARNU15GCEU4, ARNU18GCFU4, ARNU24GCFU4
Air flow	Air supply outlet	1
	Airflow direction control(left & right)	-
	Airflow direction control(up & down)	-
	Auto swing(left & right)	-
	Auto swing(up & down)	-
	Airflow steps(fan/cool/heat)	3 / 3 / 3
	Chaos swing	-
	Chaos wind(auto wind)	-
	Jet cool(Power wind)	-
	Swirl wind	-
Air purifying	Deodorizing filter	X
	Plasma air purifier	X
	Prefilter(washable / anti-fungus)	O
Installation	Drain pump	X
	E.S.P. control	O
	Electric heater(operation)	X
	High ceiling operation	-
Reliability	Hot start	O
	Self diagnosis	O
	Soft dry operation	O
Convenience	Auto changeover	O(Heat recovery)
	Auto cleaning	X
	Auto operation(artificial intelligence)	O(Heat pump or Cooling only)
	Auto restart operation	O
	Child lock	O
	Forced operation	-
	Group control	O
	Sleep mode	X
	Timer(on/off)	O
	Timer(weekly)	O
	Two thermistor control	O
	External On/Off	O
Individual control	Wide wired remote controller (RS2)	PQRCVSL0/PQRCVSL0QW
	Wide wired remote controller (RS2 Plus)	PREMTB001/PREMTBB01
	Premium wired remote controller	PREMTA000/PREMTA000A/PREMTA000B
	Simple wired remote controller	PQRCVCL0Q(W)
	Wired remote controller(for hotel use)	PQRCHCA0Q(W)
	Wireless LCD remote control	PQWRH(C)Q0FDB
Special function kit	Zone control	-
	CTIE	-
	Electro thermostat	-
	Remote temperature sensor	-
	Group control wire	PZCWRCG3
	Dry contact	PDRYCB000/PDRYCB100/PDRYCB300/PDRYCB400/PDRYCB500

O : Applied X : Not applied – : No relation

Option : Model name & price are different according to options, and assembled in factory with main unit.

Accessory : Installed at field, ordered and purchased separately by the corresponding model name, supplied with separate package.

2. Specification

Type			Floor Standing		
Model		Unit	ARNU07GCEA4	ARNU09GCEA4	ARNU12GCEA4
Cooling Capacity		kW	2.2	2.8	3.6
		kcal/h	1,900	2,400	3,100
		Btu/h	7,500	9,600	12,300
Heating Capacity		kW	2.5	3.2	4.0
		kcal/h	2,200	2,800	3,400
		Btu/h	8,500	10,900	13,600
Casing			Galvanized Steel Plate	Galvanized Steel Plate	Galvanized Steel Plate
Dimensions(WxHxD)	Body	mm	1,067 x 635 x 203	1,067 x 635 x 203	1,067 x 635 x 203
		inch	42 x 25 x 8	42 x 25 x 8	42 x 25 x 8
Coil	Rows x Columns x FPI		2 x 12 x 19	2 x 12 x 19	2 x 12 x 19
	Face Area	m^2	0.16	0.16	0.16
Fan	Type		Sirocco Fan	Sirocco Fan	Sirocco Fan
	Motor Output x Number	W	19 x 1, 5 x 1	19 x 1, 5 x 1	19 x 1, 5 x 1
	Running Current	A	0.76	0.76	0.76
	Air Flow Rate(H / M / L)	CMM	8.5 / 7.5 / 6.5	9.5 / 8.5 / 7.5	10.5 / 9.5 / 8.5
		cfm	300 / 265 / 229	335 / 300 / 265	371 / 335 / 300
	Drive		Direct	Direct	Direct
	Motor type		BLDC	BLDC	BLDC
Temperature Control			Microprocessor, Thermostat for cooling and heating	Microprocessor, Thermostat for cooling and heating	Microprocessor, Thermostat for cooling and heating
Sound Absorbing Thermal Insulation Material			Foamed polystrene	Foamed polystrene	Foamed polystrene
Air Filter			Resin Net(washable)	Resin Net(washable)	Resin Net(washable)
Safety Device			Fuse	Fuse	Fuse
Pipe Connections	Liquid Side	mm(inch)	Ø6.35(1/4)	Ø6.35(1/4)	Ø6.35(1/4)
	Gas Side	mm(inch)	Ø12.7(1/2)	Ø12.7(1/2)	Ø12.7(1/2)
	Drain Pipe(Internal Dia.)	mm(inch)	12(15/32)	12(15/32)	12(15/32)
Net Weight		kg(lbs)	27(59.5)	27(59.5)	27(59.5)
Noise Level(Sound Press, 1.5m, H / M / L)		dB(A)	35 / 33 / 31	36 / 34 / 32	37 / 35 / 33
Power Supply		Ø, V, Hz	1, 220-240, 50	1, 220-240, 50	1, 220-240, 50
			1, 220, 60	1, 220, 60	1, 220, 60
Refrigerant Control			EEV	EEV	EEV
Transmission cable		mm^2	CVV-SB 1.0~1.5 x 2C	CVV-SB 1.0~1.5 x 2C	CVV-SB 1.0~1.5 x 2C

Notes:

1. Capacities are based on the following conditions:
   - Cooling
     - Indoor temp. 27°C[80.6°F]DB/ 19°C[66.2°F]WB
     - Outdoor temp. 35°C[95°F]DB/ 24°C[75.2°F]WB
     - Interconnecting Piping Length 7.5m
     - Level Difference of Zero
   - Heating
     - Indoor temp. 20°C[68°F]DB/ 15°C[59°F]WB
     - Outdoor temp. 7°C[44.6°F]DB/ 6°C[42.8°F]WB
     - Interconnecting Piping Length 7.5m
     - Level Difference of Zero
2. Capacities are net capacities
3. Due to our policy of innovation some specifications may be changed without prior notification
4. Wiring cable size must comply with the applicable local and national codes. And “Electric characteristics” chapter should be considered for electrical work and design. Especially the power cable and circuit breaker should be selected in accordance with that.
5. EEV : Electronic Expansion Valve
6. Anechoic chamber conversion value is measured at 1.5 m downward from unit centre.
   The values depends on the ambient conditions and values are normally higher in actual operation.

Conversion Formula
kcal/h= kW x 860
Btu/h = kW x 3412
cfm = m^3/min x 35.3
l/s = CMM x 1000/60

2. Specification

Type			Floor Standing		
Model		Unit	ARNU07GCEU4	ARNU09GCEU4	ARNU12GCEU4
Cooling Capacity		kW	2.2	2.8	3.6
		kcal/h	1,900	2,400	3,100
		Btu/h	7,500	9,600	12,300
Heating Capacity		kW	2.5	3.2	4.0
		kcal/h	2,200	2,800	3,400
		Btu/h	8,500	10,900	13,600
Casing			Galvanized Steel Plate	Galvanized Steel Plate	Galvanized Steel Plate
Dimensions(WxHxD)	Body	mm	978 x 639 x 190	978 x 639 x 190	978 x 639 x 190
		inch	38-1/2 x 25-5/32 x 7-15/32	38-1/2 x 25-5/32 x 7-15/32	38-1/2 x 25-5/32 x 7-15/32
Coil	Rows x Columns x FPI		2 x 12 x 19	2 x 12 x 19	2 x 12 x 19
	Face Area	m^2	0.16	0.16	0.16
Fan	Type		Sirocco Fan	Sirocco Fan	Sirocco Fan
	Motor Output x Number	W	19 x 1, 5 x 1	19 x 1, 5 x 1	19 x 1, 5 x 1
	Running Current	A	0.76	0.76	0.76
	Air Flow Rate(H / M / L)	CMM	8.5 / 7.5 / 6.5	9.5 / 8.5 / 7.5	10.5 / 9.5 / 8.5
		cfm	300 / 265 / 229	335 / 300 / 265	371 / 335 / 300
	Drive		Direct	Direct	Direct
	Motor type		BLDC	BLDC	BLDC
Temperature Control			Microprocessor, Thermostat for cooling and heating	Microprocessor, Thermostat for cooling and heating	Microprocessor, Thermostat for cooling and heating
Sound Absorbing Thermal Insulation Material			Foamed polystrene	Foamed polystrene	Foamed polystrene
Air Filter			Resin Net(washable)	Resin Net(washable)	Resin Net(washable)
Safety Device			Fuse	Fuse	Fuse
Pipe Connections	Liquid Side	mm(inch)	Ø6.35(1/4)	Ø6.35(1/4)	Ø6.35(1/4)
	Gas Side	mm(inch)	Ø12.7(1/2)	Ø12.7(1/2)	Ø12.7(1/2)
	Drain Pipe(Internal Dia.)	mm(inch)	12(15/32)	12(15/32)	12(15/32)
Net Weight		kg(lbs)	20(44.1)	20(44.1)	20(44.1)
Noise Level(Sound Press, 1.5m, H / M / L)		dB(A)	35 / 33 / 31	36 / 34 / 32	37 / 35 / 33
Power Supply		Ø, V, Hz	1, 220-240, 50	1, 220-240, 50	1, 220-240, 50
			1, 220, 60	1, 220, 60	1, 220, 60
Refrigerant Control			EEV	EEV	EEV
Transmission cable		mm^2	CVV-SB 1.0~1.5 x 2C	CVV-SB 1.0~1.5 x 2C	CVV-SB 1.0~1.5 x 2C

Notes:

1. Capacities are based on the following conditions:
   - Cooling
     - Indoor temp. 27°C[80.6°F]DB/ 19°C[66.2°F]WB
     - Outdoor temp. 35°C[95°F]DB/ 24°C[75.2°F]WB
     - Interconnecting Piping Length 7.5m
     - Level Difference of Zero
   - Heating
     - Indoor temp. 20°C[68°F]DB/ 15°C[59°F]WB
     - Outdoor temp. 7°C[44.6°F]DB/ 6°C[42.8°F]WB
     - Interconnecting Piping Length 7.5m
     - Level Difference of Zero
2. Capacities are net capacities
3. Due to our policy of innovation some specifications may be changed without prior notification
4. Wiring cable size must comply with the applicable local and national codes. And “Electric characteristics” chapter should be considered for electrical work and design. Especially the power cable and circuit breaker should be selected in accordance with that.
5. EEV : Electronic Expansion Valve
6. Anechoic chamber conversion value is measured at 1.5 m downward from unit centre.
   The values depends on the ambient conditions and values are normally higher in actual operation.

Conversion Formula
kcal/h= kW x 860
Btu/h = kW x 3412
cfm = m^3/min x 35.3
l/s = CMM x 1000/60

2. Specification

Type			Floor Standing		
Model		Unit	ARNU15GCEA4	ARNU18GCFA4	ARNU24GCFA4
Cooling Capacity		kW	4.5	5.6	7.1
		kcal/h	3,900	4,800	6,100
		Btu/h	15,400	19,100	24,200
Heating Capacity		kW	5.0	6.3	8.0
		kcal/h	4,300	5,400	6,900
		Btu/h	17,100	21,500	27,300
Casing			Galvanized Steel Plate	Galvanized Steel Plate	Galvanized Steel Plate
Dimensions(WxHxD)	Body	mm	1,067 x 635 x 203	1,345 x 635 x 203	1,345 x 635 x 203
		inch	42 x 25 x8	52-15/16 x 25 x 8	52-15/16 x 25 x 8
Coil	Rows x Columns x FPI		2 x 12 x 19	3 x 11 x 19	3 x 11 x 19
	Face Area	m^2	0.16	0.23	0.23
Fan	Type		Sirocco Fan	Sirocco Fan	Sirocco Fan
	Motor Output x Number	W	19 x 1, 5 x 1	19 x 2	19 x 2
	Running Current	A	0.76	0.97	0.97
	Air Flow Rate(H / M / L)	CMM	11.5 / 10.0 / 9.5	16.0 / 14.0 / 12.0	18.0 / 16.0 / 14.0
		cfm	406 / 353 / 335	565 / 494 / 424	635 / 565 / 494
	Drive		Direct	Direct	Direct
	Motor type		BLDC	BLDC	BLDC
Temperature Control			Microprocessor, Thermostat for cooling and heating	Microprocessor, Thermostat for cooling and heating	Microprocessor, Thermostat for cooling and heating
Sound Absorbing Thermal Insulation Material			Foamed polystrene	Foamed polystrene	Foamed polystrene
Air Filter			Resin Net(washable)	Resin Net(washable)	Resin Net(washable)
Safety Device			Fuse	Fuse	Fuse
Pipe Connections	Liquid Side	mm(inch)	Ø6.35(1/4)	Ø6.35(1/4)	Ø9.52(3/8)
	Gas Side	mm(inch)	Ø12.7(1/2)	Ø12.7(1/2)	Ø15.88(5/8)
	Drain Pipe(Internal Dia.)	mm(inch)	12(15/32)	12(15/32)	12(15/32)
Net Weight		kg(lbs)	27(59.5)	34(75.0)	34(75.0)
Noise Level(Sound Press, 1.5m, H / M / L)		dB(A)	38 / 37 / 35	40 / 37 / 34	43 / 40 / 37
Power Supply		Ø, V, Hz	1, 220-240, 50	1, 220-240, 50	1, 220-240, 50
			1, 220, 60	1, 220, 60	1, 220, 60
Refrigerant Control			EEV	EEV	EEV
Transmission cable		mm^2	CVV-SB 1.0~1.5 x 2C	CVV-SB 1.0~1.5 x 2C	CVV-SB 1.0~1.5 x 2C

Notes:

1. Capacities are based on the following conditions:
   - Cooling
     - Indoor temp. 27°C[80.6°F]DB/ 19°C[66.2°F]WB
     - Outdoor temp. 35°C[95°F]DB/ 24°C[75.2°F]WB
     - Interconnecting Piping Length 7.5m
     - Level Difference of Zero
   - Heating
     - Indoor temp. 20°C[68°F]DB/ 15°C[59°F]WB
     - Outdoor temp. 7°C[44.6°F]DB/ 6°C[42.8°F]WB
     - Interconnecting Piping Length 7.5m
     - Level Difference of Zero
2. Capacities are net capacities
3. Due to our policy of innovation some specifications may be changed without prior notification
4. Wiring cable size must comply with the applicable local and national codes. And “Electric characteristics” chapter should be considered for electrical work and design. Especially the power cable and circuit breaker should be selected in accordance with that.
5. EEV : Electronic Expansion Valve
6. Anechoic chamber conversion value is measured at 1.5 m downward from unit centre.
   The values depends on the ambient conditions and values are normally higher in actual operation.

Conversion Formula
kcal/h= kW x 860
Btu/h = kW x 3412
cfm = m^3/min x 35.3
l/s = CMM x 1000/60

2. Specification

Type			Floor Standing		
Model		Unit	ARNU15GCEU4	ARNU18GCFU4	ARNU24GCFU4
Cooling Capacity		kW	4.5	5.6	7.1
		kcal/h	3,900	4,800	6,100
		Btu/h	15,400	19,100	24,200
Heating Capacity		kW	5.0	6.3	8.0
		kcal/h	4,300	5,400	6,900
		Btu/h	17,100	21,500	27,300
Casing			Galvanized Steel Plate	Galvanized Steel Plate	Galvanized Steel Plate
Dimensions(WxHxD)	Body	mm	978 x 639 x 190	1,256 x 639 x 190	1,256 x 639 x 190
		inch	38-1/2 x 25-5/32 x 7-15/32	49-7/16 x 25-5/32 x 7-15/32	49-7/16 x 25-5/32 x 7-15/32
Coil	Rows x Columns x FPI		2 x 12 x 19	3 x 11 x 19	3 x 11 x 19
	Face Area	m^2	0.16	0.23	0.23
Fan	Type		Sirocco Fan	Sirocco Fan	Sirocco Fan
	Motor Output x Number	W	19 x 1, 5 x 1	19 x 2	19 x 2
	Running Current	A	0.76	0.97	0.97
	Air Flow Rate(H / M / L)	CMM	11.5 / 10.0 / 9.5	16.0 / 14.0 / 12.0	18.0 / 16.0 / 14.0
		cfm	406 / 353 / 335	565 / 494 / 424	635 / 565 / 494
	Drive		Direct	Direct	Direct
	Motor type		BLDC	BLDC	BLDC
Temperature Control			Microprocessor, Thermostat for cooling and heating	Microprocessor, Thermostat for cooling and heating	Microprocessor, Thermostat for cooling and heating
Sound Absorbing Thermal Insulation Material			Foamed polystrene	Foamed polystrene	Foamed polystrene
Air Filter			Resin Net(washable)	Resin Net(washable)	Resin Net(washable)
Safety Device			Fuse	Fuse	Fuse
Pipe Connections	Liquid Side	mm(inch)	Ø6.35(1/4)	Ø6.35(1/4)	Ø9.52(3/8)
	Gas Side	mm(inch)	Ø12.7(1/2)	Ø12.7(1/2)	Ø15.88(5/8)
	Drain Pipe(Internal Dia.)	mm(inch)	12(15/32)	12(15/32)	12(15/32)
Net Weight		kg(lbs)	20(44.1)	27(59.5)	27(59.5)
Noise Level(Sound Press, 1.5m, H / M / L)		dB(A)	38 / 37 / 35	40 / 37 / 34	43 / 40 / 37
Power Supply		Ø, V, Hz	1, 220-240, 50	1, 220-240, 50	1, 220-240, 50
			1, 220, 60	1, 220, 60	1, 220, 60
Refrigerant Control			EEV	EEV	EEV
Transmission cable		mm^2	CVV-SB 1.0~1.5 x 2C	CVV-SB 1.0~1.5 x 2C	CVV-SB 1.0~1.5 x 2C

Notes:

1. Capacities are based on the following conditions:
   - Cooling
     - Indoor temp. 27°C[80.6°F]DB/ 19°C[66.2°F]WB
     - Outdoor temp. 35°C[95°F]DB/ 24°C[75.2°F]WB
     - Interconnecting Piping Length 7.5m
     - Level Difference of Zero
   - Heating
     - Indoor temp. 20°C[68°F]DB/ 15°C[59°F]WB
     - Outdoor temp. 7°C[44.6°F]DB/ 6°C[42.8°F]WB
     - Interconnecting Piping Length 7.5m
     - Level Difference of Zero
2. Capacities are net capacities
3. Due to our policy of innovation some specifications may be changed without prior notification
4. Wiring cable size must comply with the applicable local and national codes. And “Electric characteristics” chapter should be considered for electrical work and design. Especially the power cable and circuit breaker should be selected in accordance with that.
5. EEV : Electronic Expansion Valve
6. Anechoic chamber conversion value is measured at 1.5 m downward from unit centre.
   The values depends on the ambient conditions and values are normally higher in actual operation.

Conversion Formula
kcal/h= kW x 860
Btu/h = kW x 3412
cfm = m^3/min x 35.3
l/s = CMM x 1000/60

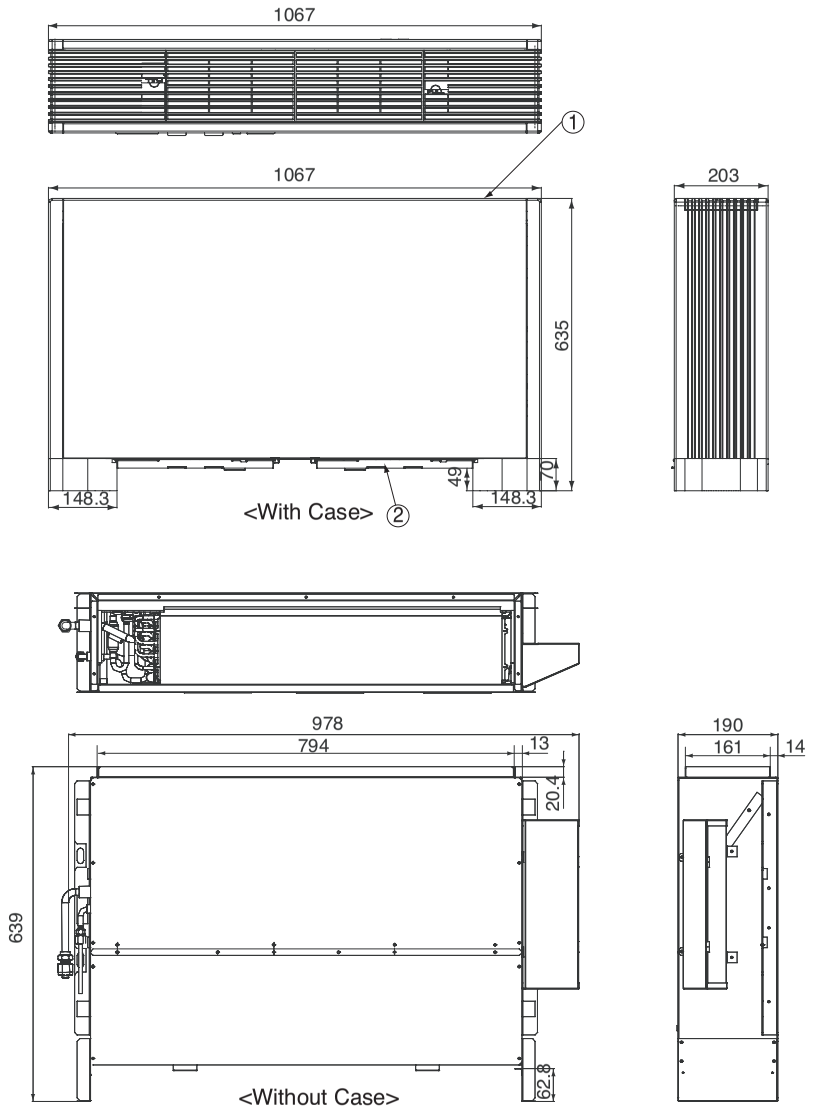

Floor Standing	
ARNU07GCEA4	ARNU07GCEU4
ARNU09GCEA4	ARNU09GCEU4
ARNU12GCEA4	ARNU12GCEU4
ARNU15GCEA4	ARNU15GCEU4

(unit : mm)

Model	W	H	D
ARNU07GCEA4 ARNU09GCEA4 ARNU12GCEA4 ARNU15GCEA4	1067	635	203
ARNU07GCEU4 ARNU09GCEU4 ARNU12GCEU4 ARNU15GCEU4	978	639	190

(unit : mm)

Number	Name	Descripition
1	Air discharge grill	
2	Air suction grill	

▣ Note

1. Unit should be installed in compliance with the installation manual in the product box.
2. Unit shall be grounded in accordance with the local regulations or applicable national codes.

LG Electronics

CHASSIS CODE: CE

Floor Standing

ARNU18GCFA4	ARNU18GCFU4
ARNU24GCFA4	ARNU24GCFU4

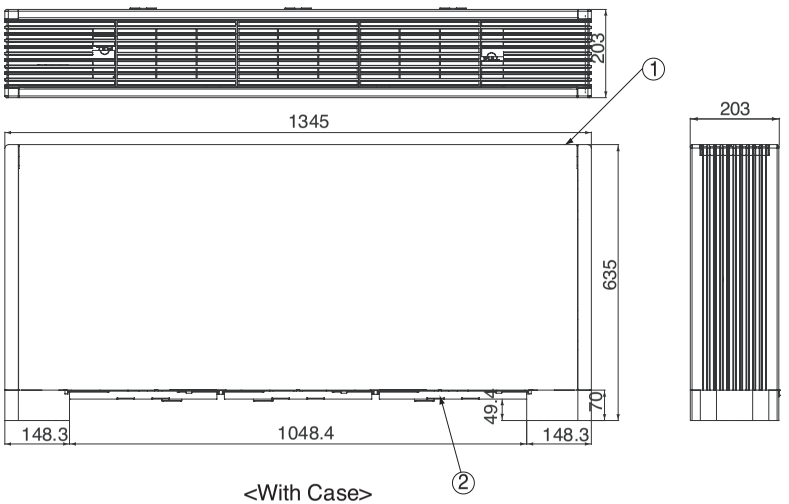

<With Case>

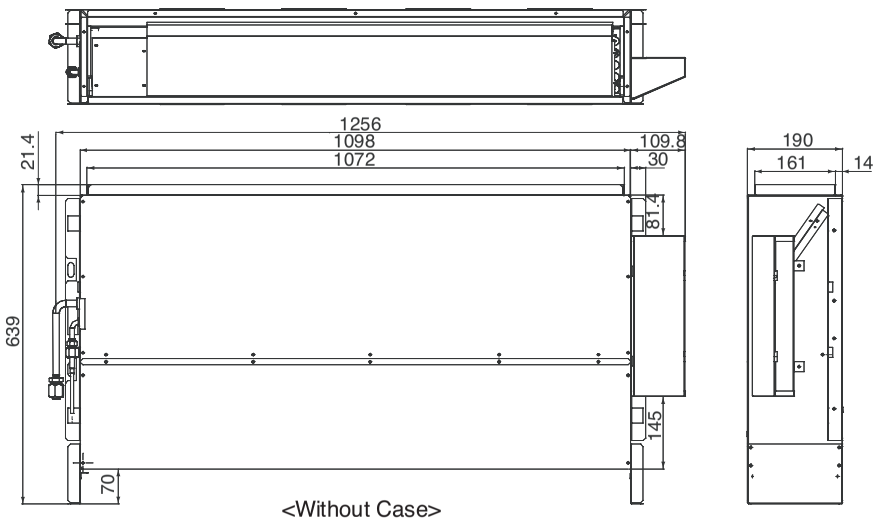

<Without Case>

(unit : mm)

Model	W	H	D
ARNU18GCFA4 ARNU24GCFA4	1345	635	203
ARNU18GCFU4 ARNU24GCFU4	1256	639	190

(unit : mm)

Number	Name	Descripition
1	Air discharge grill	
2	Air suction grill	

▣ Note

1. Unit should be installed in compliance with the installation manual in the product box.
2. Unit shall be grounded in accordance with the local regulations or applicable national codes.

LG Electronics

CHASSIS CODE: CF

4. Piping Diagrams

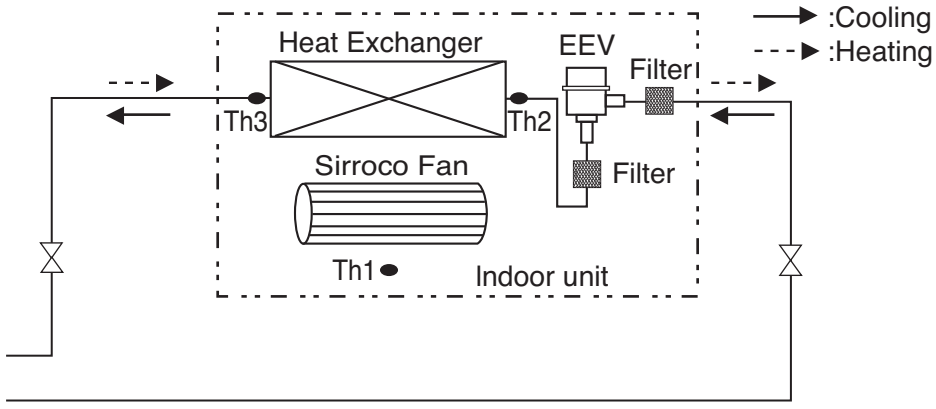

Refrigerant pipe connection port diameter

[Unit: mm(inch)]

Model	Gas	Liquid
ARNU07GCEA4	Ø12.7(1/2)	Ø6.35(1/4)
ARNU07GCEU4		
ARNU09GCEA4	Ø12.7(1/2)	Ø6.35(1/4)
ARNU09GCEU4		
ARNU12GCEA4	Ø12.7(1/2)	Ø6.35(1/4)
ARNU12GCEU4		
ARNU15GCEA4	Ø12.7(1/2)	Ø6.35(1/4)
ARNU15GCEU4		
ARNU18GCFA4	Ø12.7(1/2)	Ø6.35(1/4)
ARNU18GCFU4		
ARNU24GCFA4	Ø15.88(5/8)	Ø9.52(3/8)
ARNU24GCFU4		

LOC.	Description	PCB Connector (Color)
Th1	Thermistor for room air temperature	CN-ROOM (Yellow)
Th2	Thermistor for pipe in temperature	CN-PIPE_IN (White)
Th3	Thermistor for pipe out temperature	CN-PIPE_OUT (Red)

5. Wiring Diagrams

CE/CF Chassis

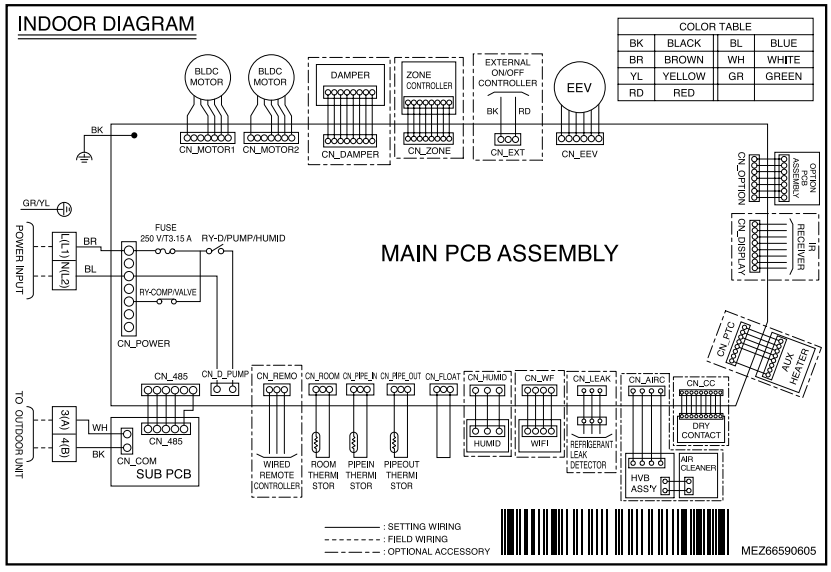

CONNECTOR NUMBER	SPEC.	DESCRIPTION
CN-POWER	AC power supply	AC Power line input for indoor controller
CN-MOTOR1	Fan motor output	Motor output of BLDC
CN-MOTOR2	Fan motor output	Motor output of BLDC
CN-COMM	Communication	Communication between indoor and outdoor
CN-EEV	Float switch input	EEV Control output
CN-PIPE_IN	Suction pipe sensor	Pipe in thermistor
CN-PIPE_OUT	Discharge pipe sensor	Pipe out thermistor
CN-ROOM	Room sensor	Room thermistor
CN-REMO	Remote controller	Remote control line
CN-OPTION	Option PCB	Communication between main and option
CN-ZONE	Zone controller	Zone control line
CN-DISPLAY	RF Remote controller	RF Remote control line
CN-CC	Dry contact	Dry contact line
CN-EXT	External On/Off	External On/Off signal input

	Function	Description	Setting Off	Setting On	Default
SW1	Communication	N/A (Default)	-	-	Off
SW2	Cycle	N/A (Default)	-	-	Off
SW3	Group Control	Selection of Master or Slave	Master	Slave	Off
SW4	Dry Contact Mode	Selection of Dry Contact Mode	Wired/Wireless remote controller selection of Manual or Auto operation Mode	Auto	Off
SW5	Installation	Fan continuous operation	Continuous operation Removal	-	Off
SW6	Heater linkage	N/A	-	-	Off
SW7	Ventilator linkage	Selection of Ventilator linkage	Linkage Removal	Working	Off
	Vane selection (Console)	Selection of up/down side Vane	Up side + Down side Vane	Up side Vane Only	
	Region selection	Selection tropical region	General model	Tropical model	
SW8	Etc.	Spare	-	-	Off

⚠ C, UTION

For Multi V Models, DIP switch 1, 2, 6, 8 must be set OFF.

6. Capacity Tables

6.1 Cooling Capacity

Cooling capacity

Capacity Index	Outdoor air temp. (DB, °C)	Indoor air temp. (DB/WB, °C)													
		20		23		26		27		28		30		32	
		14		16		18		19		20		22		24	
		TC	SHC	TC	SHC	TC	SHC	TC	SHC	TC	SHC	TC	SHC	TC	SHC
		kW	kW	kW	kW	kW	kW	kW	kW	kW	kW	kW	kW	kW	kW
2.2	10	1.5	1.3	1.8	1.4	2.1	1.5	2.2	1.6	2.3	1.6	2.6	1.7	2.9	1.7
	12	1.5	1.3	1.8	1.4	2.1	1.5	2.2	1.6	2.3	1.6	2.6	1.7	2.9	1.6
	14	1.5	1.3	1.8	1.4	2.1	1.5	2.2	1.6	2.3	1.6	2.6	1.7	2.8	1.6
	16	1.5	1.3	1.8	1.4	2.1	1.5	2.2	1.6	2.3	1.6	2.6	1.7	2.8	1.6
	18	1.5	1.3	1.8	1.4	2.1	1.5	2.2	1.6	2.3	1.6	2.6	1.7	2.7	1.6
	20	1.5	1.3	1.8	1.4	2.1	1.5	2.2	1.6	2.3	1.6	2.6	1.7	2.7	1.6
	21	1.5	1.3	1.8	1.4	2.1	1.5	2.2	1.6	2.3	1.6	2.6	1.7	2.7	1.5
	23	1.5	1.3	1.8	1.4	2.1	1.5	2.2	1.6	2.3	1.6	2.6	1.7	2.6	1.5
	25	1.5	1.3	1.8	1.4	2.1	1.5	2.2	1.6	2.3	1.6	2.6	1.7	2.6	1.5
	27	1.5	1.3	1.8	1.4	2.1	1.5	2.2	1.6	2.3	1.6	2.5	1.6	2.6	1.5
	29	1.5	1.3	1.8	1.4	2.1	1.5	2.2	1.6	2.3	1.6	2.5	1.6	2.5	1.5
	31	1.5	1.3	1.8	1.4	2.1	1.5	2.2	1.6	2.3	1.6	2.5	1.6	2.5	1.4
	33	1.5	1.3	1.8	1.4	2.1	1.5	2.2	1.6	2.3	1.6	2.4	1.5	2.5	1.4
	35	1.5	1.3	1.8	1.4	2.1	1.5	2.2	1.6	2.3	1.6	2.4	1.5	2.4	1.4
	37	1.5	1.3	1.8	1.4	2.1	1.5	2.2	1.6	2.3	1.6	2.3	1.5	2.4	1.4
	39	1.5	1.3	1.8	1.4	2.1	1.5	2.2	1.6	2.2	1.5	2.3	1.5	2.3	1.4
2.8	10	1.9	1.7	2.3	1.9	2.6	2.0	2.8	2.0	3.0	2.1	3.4	2.2	3.7	2.2
	12	1.9	1.7	2.3	1.9	2.6	2.0	2.8	2.0	3.0	2.1	3.4	2.2	3.6	2.1
	14	1.9	1.7	2.3	1.9	2.6	2.0	2.8	2.0	3.0	2.1	3.4	2.2	3.6	2.1
	16	1.9	1.7	2.3	1.9	2.6	2.0	2.8	2.0	3.0	2.1	3.4	2.2	3.5	2.1
	18	1.9	1.7	2.3	1.9	2.6	2.0	2.8	2.0	3.0	2.1	3.4	2.2	3.5	2.1
	20	1.9	1.7	2.3	1.9	2.6	2.0	2.8	2.0	3.0	2.1	3.4	2.2	3.4	2.0
	21	1.9	1.7	2.3	1.9	2.6	2.0	2.8	2.0	3.0	2.1	3.4	2.2	3.4	2.0
	23	1.9	1.7	2.3	1.9	2.6	2.0	2.8	2.0	3.0	2.1	3.4	2.2	3.4	2.0
	25	1.9	1.7	2.3	1.9	2.6	2.0	2.8	2.0	3.0	2.1	3.3	2.2	3.3	2.0
	27	1.9	1.7	2.3	1.9	2.6	2.0	2.8	2.0	3.0	2.1	3.2	2.1	3.3	1.9
	29	1.9	1.7	2.3	1.9	2.6	2.0	2.8	2.0	3.0	2.1	3.2	2.1	3.2	1.9
	31	1.9	1.7	2.3	1.9	2.6	2.0	2.8	2.0	3.0	2.1	3.1	2.1	3.2	1.9
	33	1.9	1.7	2.3	1.9	2.6	2.0	2.8	2.0	3.0	2.1	3.1	2.0	3.1	1.9
	35	1.9	1.7	2.3	1.9	2.6	2.0	2.8	2.0	3.0	2.1	3.0	2.0	3.1	1.8
	37	1.9	1.7	2.3	1.9	2.6	2.0	2.8	2.0	2.9	2.1	3.0	1.9	3.0	1.8
	39	1.9	1.7	2.3	1.9	2.6	2.0	2.8	2.0	2.9	2.0	2.9	1.9	3.0	1.8
3.6	10	2.4	2.2	2.9	2.4	3.4	2.6	3.6	2.7	3.8	2.7	4.3	2.9	4.7	2.8
	12	2.4	2.2	2.9	2.4	3.4	2.6	3.6	2.7	3.8	2.7	4.3	2.9	4.7	2.8
	14	2.4	2.2	2.9	2.4	3.4	2.6	3.6	2.7	3.8	2.7	4.3	2.9	4.6	2.8
	16	2.4	2.2	2.9	2.4	3.4	2.6	3.6	2.7	3.8	2.7	4.3	2.9	4.6	2.7
	18	2.4	2.2	2.9	2.4	3.4	2.6	3.6	2.7	3.8	2.7	4.3	2.9	4.5	2.7
	20	2.4	2.2	2.9	2.4	3.4	2.6	3.6	2.7	3.8	2.7	4.3	2.9	4.4	2.7
	21	2.4	2.2	2.9	2.4	3.4	2.6	3.6	2.7	3.8	2.7	4.3	2.9	4.4	2.6
	23	2.4	2.2	2.9	2.4	3.4	2.6	3.6	2.7	3.8	2.7	4.3	2.9	4.3	2.6
	25	2.4	2.2	2.9	2.4	3.4	2.6	3.6	2.7	3.8	2.7	4.2	2.8	4.3	2.6
	27	2.4	2.2	2.9	2.4	3.4	2.6	3.6	2.7	3.8	2.7	4.1	2.8	4.2	2.5
	29	2.4	2.2	2.9	2.4	3.4	2.6	3.6	2.7	3.8	2.7	4.1	2.7	4.2	2.5
	31	2.4	2.2	2.9	2.4	3.4	2.6	3.6	2.7	3.8	2.7	4.0	2.7	4.1	2.5
	33	2.4	2.2	2.9	2.4	3.4	2.6	3.6	2.7	3.8	2.7	4.0	2.6	4.0	2.4
	35	2.4	2.2	2.9	2.4	3.4	2.6	3.6	2.7	3.8	2.7	3.9	2.6	4.0	2.4
	37	2.4	2.2	2.9	2.4	3.4	2.6	3.6	2.7	3.7	2.7	3.8	2.5	3.9	2.3
	39	2.4	2.2	2.9	2.4	3.4	2.6	3.6	2.7	3.7	2.6	3.7	2.5	3.8	2.3

Notes:

TC: Total Capacity(kW)

SHC: Sensible Heat Capacity(kW)

1. Capacity tables show the representative value of conditions which may occur.
2. Refer to Capacity Correction Factor in the outdoor unit PDB for the actual performance data of each indoor unit and outdoor unit combination.

6. Capacity Tables

Cooling capacity

Capacity Index	Outdoor air temp. (DB, °C)	Indoor air temp. (DB/WB, °C)													
		20		23		26		27		28		30		32	
		14		16		18		19		20		22		24	
		TC	SHC	TC	SHC	TC	SHC	TC	SHC	TC	SHC	TC	SHC	TC	SHC
		kW	kW	kW	kW	kW	kW	kW	kW	kW	kW	kW	kW	kW	kW
4.5	10	3.0	2.7	3.6	3.0	4.2	3.2	4.5	3.3	4.8	3.4	5.4	3.6	5.9	3.5
	12	3.0	2.7	3.6	3.0	4.2	3.2	4.5	3.3	4.8	3.4	5.4	3.6	5.8	3.5
	14	3.0	2.7	3.6	3.0	4.2	3.2	4.5	3.3	4.8	3.4	5.4	3.6	5.8	3.4
	16	3.0	2.7	3.6	3.0	4.2	3.2	4.5	3.3	4.8	3.4	5.4	3.6	5.7	3.4
	18	3.0	2.7	3.6	3.0	4.2	3.2	4.5	3.3	4.8	3.4	5.4	3.6	5.6	3.4
	20	3.0	2.7	3.6	3.0	4.2	3.2	4.5	3.3	4.8	3.4	5.4	3.6	5.5	3.3
	21	3.0	2.7	3.6	3.0	4.2	3.2	4.5	3.3	4.8	3.4	5.4	3.6	5.5	3.3
	23	3.0	2.7	3.6	3.0	4.2	3.2	4.5	3.3	4.8	3.4	5.4	3.6	5.4	3.2
	25	3.0	2.7	3.6	3.0	4.2	3.2	4.5	3.3	4.8	3.4	5.3	3.5	5.3	3.2
	27	3.0	2.7	3.6	3.0	4.2	3.2	4.5	3.3	4.8	3.4	5.2	3.4	5.3	3.2
	29	3.0	2.7	3.6	3.0	4.2	3.2	4.5	3.3	4.8	3.4	5.1	3.4	5.2	3.1
	31	3.0	2.7	3.6	3.0	4.2	3.2	4.5	3.3	4.8	3.4	5.1	3.3	5.1	3.0
	33	3.0	2.7	3.6	3.0	4.2	3.2	4.5	3.3	4.8	3.4	4.9	3.3	5.0	3.0
	35	3.0	2.7	3.6	3.0	4.2	3.2	4.5	3.3	4.8	3.4	4.9	3.2	4.9	3.0
	37	3.0	2.7	3.6	3.0	4.2	3.2	4.5	3.3	4.7	3.3	4.8	3.2	4.9	2.9
	39	3.0	2.7	3.6	3.0	4.2	3.2	4.5	3.3	4.6	3.2	4.7	3.1	4.8	2.8
5.6	10	3.8	3.3	4.5	3.7	5.2	4.0	5.6	4.0	6.0	4.2	6.7	4.3	7.4	4.3
	12	3.8	3.3	4.5	3.7	5.2	4.0	5.6	4.0	6.0	4.2	6.7	4.3	7.3	4.2
	14	3.8	3.3	4.5	3.7	5.2	4.0	5.6	4.0	6.0	4.2	6.7	4.3	7.2	4.2
	16	3.8	3.3	4.5	3.7	5.2	4.0	5.6	4.0	6.0	4.2	6.7	4.3	7.1	4.1
	18	3.8	3.3	4.5	3.7	5.2	4.0	5.6	4.0	6.0	4.2	6.7	4.3	7.0	4.1
	20	3.8	3.3	4.5	3.7	5.2	4.0	5.6	4.0	6.0	4.2	6.7	4.3	6.9	4.0
	21	3.8	3.3	4.5	3.7	5.2	4.0	5.6	4.0	6.0	4.2	6.7	4.3	6.8	4.0
	23	3.8	3.3	4.5	3.7	5.2	4.0	5.6	4.0	6.0	4.2	6.7	4.3	6.7	3.9
	25	3.8	3.3	4.5	3.7	5.2	4.0	5.6	4.0	6.0	4.2	6.6	4.3	6.6	3.9
	27	3.8	3.3	4.5	3.7	5.2	4.0	5.6	4.0	6.0	4.2	6.4	4.2	6.6	3.8
	29	3.8	3.3	4.5	3.7	5.2	4.0	5.6	4.0	6.0	4.2	6.4	4.1	6.5	3.8
	31	3.8	3.3	4.5	3.7	5.2	4.0	5.6	4.0	6.0	4.2	6.3	4.1	6.4	3.7
	33	3.8	3.3	4.5	3.7	5.2	4.0	5.6	4.0	6.0	4.2	6.2	4.0	6.3	3.7
	35	3.8	3.3	4.5	3.7	5.2	4.0	5.6	4.0	6.0	4.2	6.0	3.9	6.2	3.6
	37	3.8	3.3	4.5	3.7	5.2	4.0	5.6	4.0	5.8	4.1	5.9	3.8	6.1	3.6
	39	3.8	3.3	4.5	3.7	5.2	4.0	5.6	4.0	5.7	4.0	5.8	3.8	6.0	3.5
7.1	10	4.8	4.1	5.7	4.6	6.6	5.0	7.1	5.0	7.6	5.2	8.5	5.4	9.3	5.4
	12	4.8	4.1	5.7	4.6	6.6	5.0	7.1	5.0	7.6	5.2	8.5	5.4	9.2	5.3
	14	4.8	4.1	5.7	4.6	6.6	5.0	7.1	5.0	7.6	5.2	8.5	5.4	9.1	5.2
	16	4.8	4.1	5.7	4.6	6.6	5.0	7.1	5.0	7.6	5.2	8.5	5.4	9.0	5.2
	18	4.8	4.1	5.7	4.6	6.6	5.0	7.1	5.0	7.6	5.2	8.5	5.4	8.8	5.1
	20	4.8	4.1	5.7	4.6	6.6	5.0	7.1	5.0	7.6	5.2	8.5	5.4	8.7	5.0
	21	4.8	4.1	5.7	4.6	6.6	5.0	7.1	5.0	7.6	5.2	8.5	5.4	8.7	5.0
	23	4.8	4.1	5.7	4.6	6.6	5.0	7.1	5.0	7.6	5.2	8.5	5.4	8.5	4.9
	25	4.8	4.1	5.7	4.6	6.6	5.0	7.1	5.0	7.6	5.2	8.4	5.4	8.4	4.8
	27	4.8	4.1	5.7	4.6	6.6	5.0	7.1	5.0	7.6	5.2	8.2	5.2	8.3	4.8
	29	4.8	4.1	5.7	4.6	6.6	5.0	7.1	5.0	7.6	5.2	8.1	5.2	8.2	4.7
	31	4.8	4.1	5.7	4.6	6.6	5.0	7.1	5.0	7.6	5.2	8.0	5.1	8.1	4.6
	33	4.8	4.1	5.7	4.6	6.6	5.0	7.1	5.0	7.6	5.2	7.8	5.0	7.9	4.6
	35	4.8	4.1	5.7	4.6	6.6	5.0	7.1	5.0	7.6	5.2	7.7	4.9	7.8	4.5
	37	4.8	4.1	5.7	4.6	6.6	5.0	7.1	5.0	7.4	5.1	7.5	4.8	7.7	4.4
	39	4.8	4.1	5.7	4.6	6.6	5.0	7.1	5.0	7.2	5.0	7.4	4.7	7.6	4.4

Notes:

TC: Total Capacity(kW)

SHC: Sensible Heat Capacity(kW)

1. Capacity tables show the representative value of conditions which may occur.
2. Refer to Capacity Correction Factor in the outdoor unit PDB for the actual performance data of each indoor unit and outdoor unit combination.

6. Capacity Tables

6.2 Heating Capacity

Heating capacity

Capacity Index	Outdoor air temp.		Indoor air temp. (DB, °C)					
			16	18	20	21	22	24
	DB(°C)	WB(°C)	TC	TC	TC	TC	TC	TC
			kW	kW	kW	kW	kW	kW
2.2	-24.8	-25.0	1.4	1.4	1.4	1.4	1.4	1.4
	-21.8	-22.0	1.7	1.7	1.7	1.7	1.7	1.7
	-19.8	-20.0	1.8	1.8	1.8	1.8	1.8	1.8
	-18.8	-19.0	1.9	1.9	1.9	1.9	1.9	1.9
	-16.7	-17.0	2.0	2.0	2.0	2.0	2.0	2.0
	-14.7	-15.0	2.1	2.1	2.1	2.1	2.1	2.0
	-12.6	-13.0	2.2	2.2	2.2	2.2	2.1	2.1
	-10.5	-11.0	2.3	2.3	2.2	2.2	2.2	2.2
	-9.5	-10.0	2.3	2.3	2.3	2.3	2.3	2.2
	-8.5	-9.1	2.3	2.3	2.3	2.3	2.3	2.2
	-7.0	-7.6	2.4	2.4	2.4	2.4	2.3	2.2
	-5.0	-5.6	2.5	2.5	2.5	2.4	2.3	2.2
	-3.0	-3.7	2.6	2.6	2.5	2.4	2.3	2.2
	0.0	-0.7	2.7	2.6	2.5	2.4	2.3	2.2
	3.0	2.2	2.7	2.7	2.5	2.4	2.3	2.2
	5.0	4.1	2.8	2.7	2.5	2.4	2.3	2.2
	7.0	6.0	2.8	2.7	2.5	2.4	2.3	2.2
	9.0	7.9	2.8	2.7	2.5	2.4	2.3	2.2
	11.0	9.8	2.8	2.7	2.5	2.4	2.3	2.2
	13.0	11.8	2.8	2.7	2.5	2.4	2.3	2.2
	15.0	13.7	2.8	2.7	2.5	2.4	2.3	2.2
2.8	-24.8	-25.0	1.9	1.9	1.8	1.8	1.8	1.8
	-21.8	-22.0	2.2	2.2	2.2	2.2	2.2	2.2
	-19.8	-20.0	2.4	2.4	2.3	2.3	2.3	2.3
	-18.8	-19.0	2.4	2.4	2.4	2.4	2.4	2.4
	-16.7	-17.0	2.5	2.5	2.5	2.5	2.5	2.5
	-14.7	-15.0	2.7	2.7	2.6	2.6	2.6	2.6
	-12.6	-13.0	2.8	2.8	2.8	2.8	2.7	2.7
	-10.5	-11.0	2.9	2.9	2.9	2.9	2.9	2.8
	-9.5	-10.0	3.0	3.0	2.9	2.9	2.9	2.8
	-8.5	-9.1	3.0	3.0	3.0	3.0	3.0	2.8
	-7.0	-7.6	3.1	3.1	3.1	3.1	3.0	2.8
	-5.0	-5.6	3.2	3.2	3.2	3.1	3.0	2.8
	-3.0	-3.7	3.4	3.3	3.2	3.1	3.0	2.8
	0.0	-0.7	3.4	3.3	3.2	3.1	3.0	2.8
	3.0	2.2	3.5	3.4	3.2	3.1	3.0	2.8
	5.0	4.1	3.6	3.4	3.2	3.1	3.0	2.8
	7.0	6.0	3.6	3.4	3.2	3.1	3.0	2.8
	9.0	7.9	3.6	3.4	3.2	3.1	3.0	2.8
	11.0	9.8	3.6	3.4	3.2	3.1	3.0	2.8
	13.0	11.8	3.6	3.4	3.2	3.1	3.0	2.8
	15.0	13.7	3.6	3.4	3.2	3.1	3.0	2.8
3.6	-24.8	-25.0	2.3	2.3	2.3	2.3	2.3	2.3
	-21.8	-22.0	2.8	2.8	2.8	2.8	2.8	2.8
	-19.8	-20.0	2.9	2.9	2.9	2.9	2.9	2.9
	-18.8	-19.0	3.0	3.0	3.0	3.0	3.0	3.0
	-16.7	-17.0	3.1	3.1	3.1	3.1	3.1	3.1
	-14.7	-15.0	3.3	3.3	3.3	3.3	3.3	3.3
	-12.6	-13.0	3.5	3.4	3.4	3.4	3.4	3.4
	-10.5	-11.0	3.6	3.6	3.6	3.6	3.6	3.5
	-9.5	-10.0	3.7	3.7	3.7	3.7	3.7	3.5
	-8.5	-9.1	3.8	3.8	3.7	3.7	3.7	3.5
	-7.0	-7.6	3.9	3.9	3.9	3.8	3.7	3.5
	-5.0	-5.6	4.0	4.0	4.0	3.9	3.7	3.5
	-3.0	-3.7	4.2	4.1	4.0	3.9	3.7	3.5
	0.0	-0.7	4.3	4.1	4.0	3.9	3.7	3.5
	3.0	2.2	4.4	4.3	4.0	3.9	3.7	3.5
	5.0	4.1	4.5	4.3	4.0	3.9	3.7	3.5
	7.0	6.0	4.5	4.3	4.0	3.9	3.7	3.5
	9.0	7.9	4.5	4.3	4.0	3.9	3.7	3.5
	11.0	9.8	4.5	4.3	4.0	3.9	3.7	3.5
	13.0	11.8	4.5	4.3	4.0	3.9	3.7	3.5
	15.0	13.7	4.5	4.3	4.0	3.9	3.7	3.5

Notes:

TC: Total Capacity(kW)

1. Capacity tables show the representative value of conditions which may occur.
2. is shown as reference. When selecting the outdoor units, avoid the outdoor air temperature range shown by .
3. In accordance with operation limits of outdoor unit, applicable range of capacity tables is different.
4. Refer to Capacity Correction Factor in the outdoor unit PDB for the actual performance data of each indoor unit and outdoor unit combination.

6. Capacity Tables

Heating capacity

Capacity Index	Outdoor air temp.		Indoor air temp. (DB, °C)					
			16	18	20	21	22	24
	DB(°C)	WB(°C)	TC	TC	TC	TC	TC	TC
			kW	kW	kW	kW	kW	kW
4.5	-24.8	-25.0	2.9	2.9	2.9	2.9	2.9	2.9
	-21.8	-22.0	3.5	3.5	3.5	3.5	3.5	3.5
	-19.8	-20.0	3.7	3.7	3.7	3.7	3.7	3.6
	-18.8	-19.0	3.8	3.7	3.7	3.7	3.7	3.7
	-16.7	-17.0	3.9	3.9	3.9	3.9	3.9	3.9
	-14.7	-15.0	4.1	4.1	4.1	4.1	4.1	4.1
	-12.6	-13.0	4.3	4.3	4.3	4.3	4.3	4.3
	-10.5	-11.0	4.5	4.5	4.5	4.5	4.5	4.4
	-9.5	-10.0	4.6	4.6	4.6	4.6	4.6	4.4
	-8.5	-9.1	4.7	4.7	4.7	4.7	4.7	4.4
	-7.0	-7.6	4.8	4.8	4.8	4.8	4.7	4.4
	-5.0	-5.6	5.0	5.0	5.0	4.8	4.7	4.4
	-3.0	-3.7	5.3	5.1	5.0	4.8	4.7	4.4
	0.0	-0.7	5.3	5.2	5.0	4.8	4.7	4.4
	3.0	2.2	5.5	5.3	5.0	4.8	4.7	4.4
	5.0	4.1	5.6	5.3	5.0	4.8	4.7	4.4
	7.0	6.0	5.6	5.3	5.0	4.8	4.7	4.4
	9.0	7.9	5.6	5.3	5.0	4.8	4.7	4.4
	11.0	9.8	5.6	5.3	5.0	4.8	4.7	4.4
	13.0	11.8	5.6	5.3	5.0	4.8	4.7	4.4
	15.0	13.7	5.6	5.3	5.0	4.8	4.7	4.4
5.6	-24.8	-25.0	3.6	3.6	3.6	3.6	3.6	3.6
	-21.8	-22.0	4.4	4.4	4.4	4.4	4.4	4.4
	-19.8	-20.0	4.6	4.6	4.6	4.6	4.6	4.6
	-18.8	-19.0	4.8	4.7	4.7	4.7	4.7	4.7
	-16.7	-17.0	5.0	5.0	5.0	4.9	4.9	4.9
	-14.7	-15.0	5.2	5.2	5.2	5.2	5.2	5.2
	-12.6	-13.0	5.5	5.4	5.4	5.4	5.4	5.4
	-10.5	-11.0	5.7	5.7	5.7	5.7	5.7	5.5
	-9.5	-10.0	5.8	5.8	5.8	5.8	5.8	5.5
	-8.5	-9.1	5.9	5.9	5.9	5.9	5.9	5.5
	-7.0	-7.6	6.1	6.1	6.1	6.0	5.9	5.5
	-5.0	-5.6	6.3	6.3	6.3	6.1	5.9	5.5
	-3.0	-3.7	6.6	6.5	6.3	6.1	5.9	5.5
	0.0	-0.7	6.7	6.5	6.3	6.1	5.9	5.5
	3.0	2.2	6.9	6.7	6.3	6.1	5.9	5.5
	5.0	4.1	7.0	6.7	6.3	6.1	5.9	5.5
	7.0	6.0	7.1	6.7	6.3	6.1	5.9	5.5
	9.0	7.9	7.1	6.7	6.3	6.1	5.9	5.5
	11.0	9.8	7.1	6.7	6.3	6.1	5.9	5.5
	13.0	11.8	7.1	6.7	6.3	6.1	5.9	5.5
	15.0	13.7	7.1	6.7	6.3	6.1	5.9	5.5
7.1	-24.8	-25.0	4.6	4.6	4.6	4.6	4.6	4.6
	-21.8	-22.0	5.6	5.6	5.6	5.6	5.6	5.5
	-19.8	-20.0	5.9	5.9	5.9	5.9	5.9	5.8
	-18.8	-19.0	6.0	6.0	6.0	6.0	6.0	6.0
	-16.7	-17.0	6.3	6.3	6.3	6.3	6.3	6.3
	-14.7	-15.0	6.6	6.6	6.6	6.6	6.6	6.6
	-12.6	-13.0	6.9	6.9	6.9	6.9	6.9	6.9
	-10.5	-11.0	7.2	7.2	7.2	7.2	7.2	7.0
	-9.5	-10.0	7.4	7.4	7.3	7.3	7.3	7.0
	-8.5	-9.1	7.5	7.5	7.5	7.5	7.5	7.0
	-7.0	-7.6	7.7	7.7	7.7	7.7	7.5	7.0
	-5.0	-5.6	8.0	8.0	8.0	7.7	7.5	7.0
	-3.0	-3.7	8.4	8.2	8.0	7.7	7.5	7.0
	0.0	-0.7	8.6	8.3	8.0	7.7	7.5	7.0
	3.0	2.2	8.8	8.5	8.0	7.7	7.5	7.0
	5.0	4.1	8.9	8.5	8.0	7.7	7.5	7.0
	7.0	6.0	9.0	8.5	8.0	7.7	7.5	7.0
	9.0	7.9	9.0	8.5	8.0	7.7	7.5	7.0
	11.0	9.8	9.0	8.5	8.0	7.7	7.5	7.0
	13.0	11.8	9.0	8.5	8.0	7.7	7.5	7.0
	15.0	13.7	9.0	8.5	8.0	7.7	7.5	7.0

Notes:

TC: Total Capacity(kW)

1. Capacity tables show the representative value of conditions which may occur.
2. is shown as reference. When selecting the outdoor units, avoid the outdoor air temperature range shown by .
3. In accordance with operation limits of outdoor unit, applicable range of capacity tables is different.
4. Refer to Capacity Correction Factor in the outdoor unit PDB for the actual performance data of each indoor unit and outdoor unit combination.

7. Air velocity and Temperature Distribution(Reference Data)

ARNU07GCEA4 /ARNU07GCEU4

Cooling

Discharge angle:45°

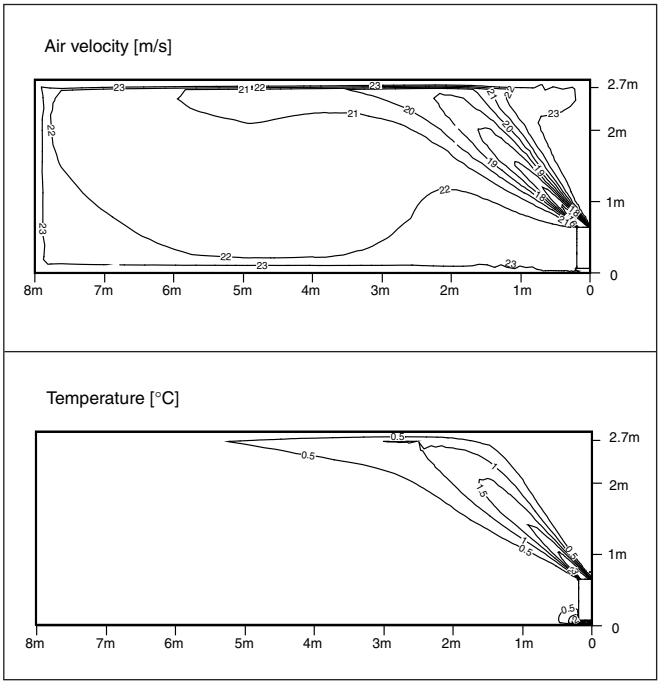

Heating

Discharge angle:60°

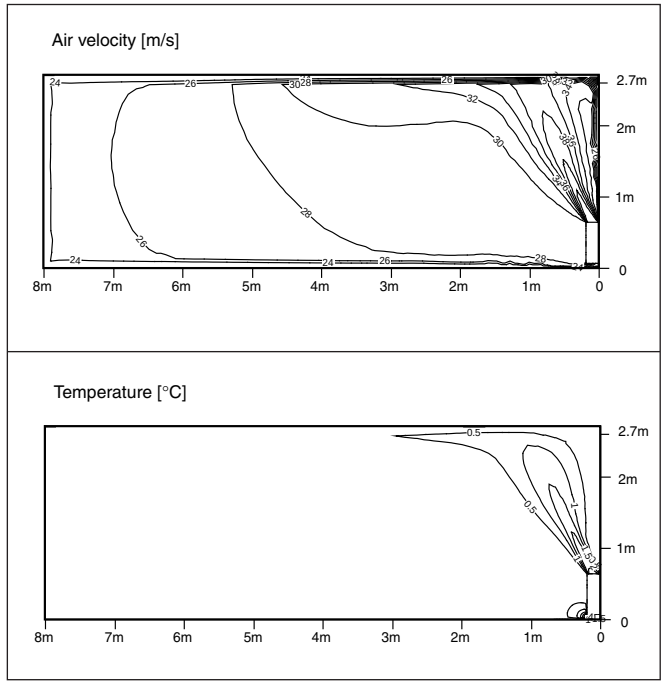

ARNU09GCEA4 /ARNU09GCEU4

Cooling

Discharge angle:45°

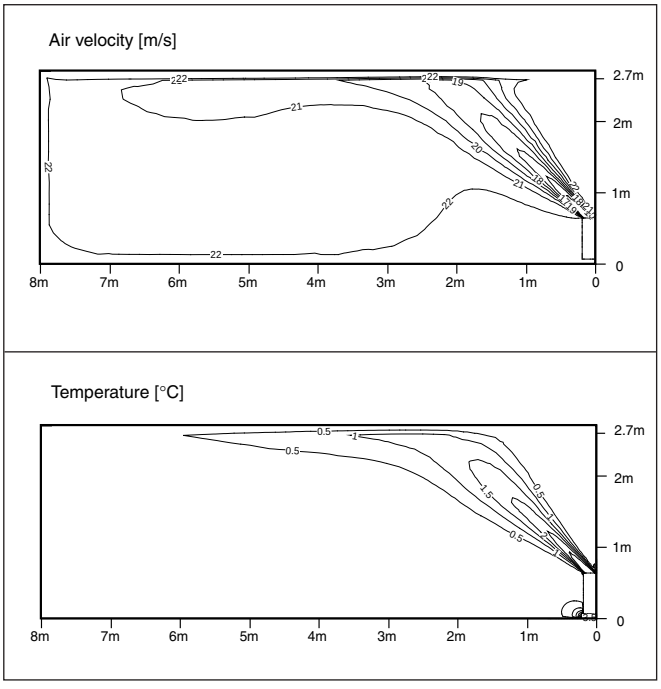

Heating

Discharge angle:60°

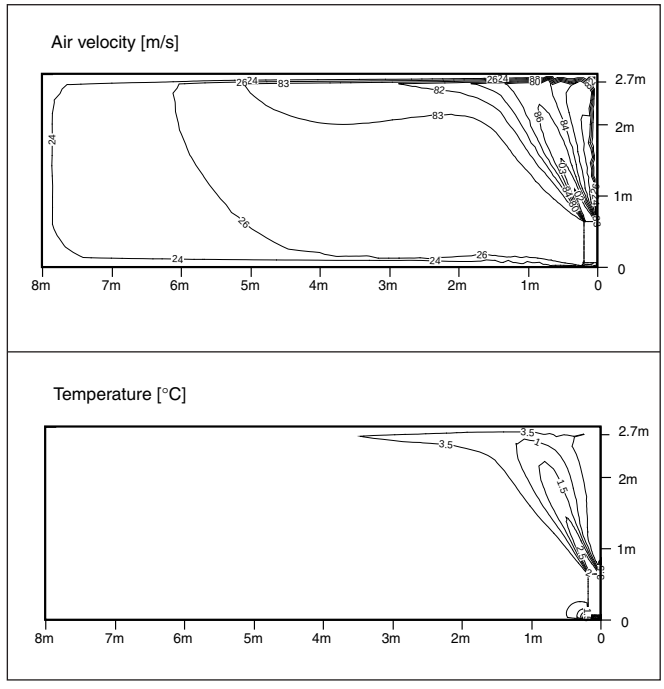

7. Air velocity and Temperature Distribution(Reference Data)

ARNU12GCEA4 /ARNU12GCEU4

Cooling

Discharge angle:45°

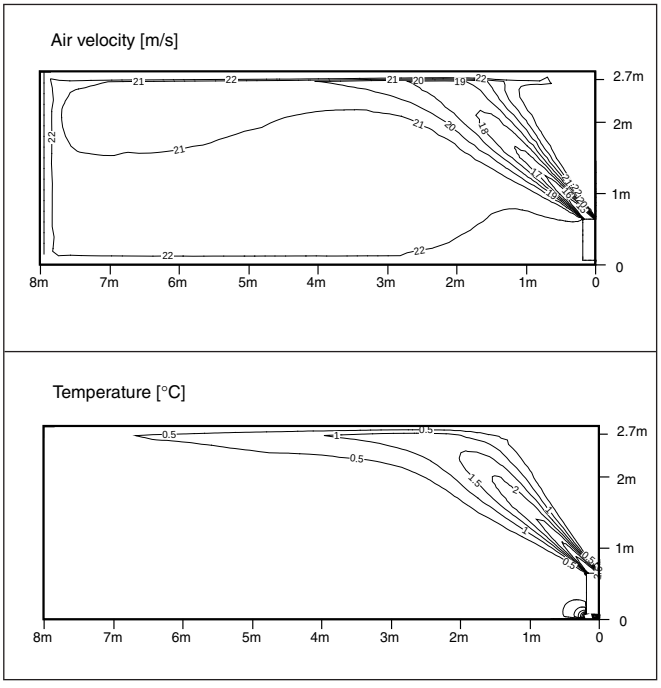

Heating

Discharge angle:60°

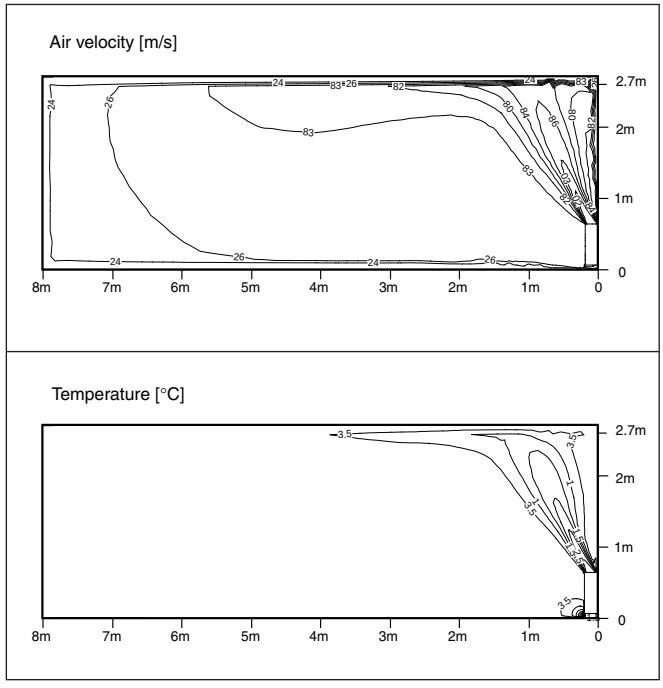

ARNU15GCEA4 /ARNU15GCEU4

Cooling

Discharge angle:45°

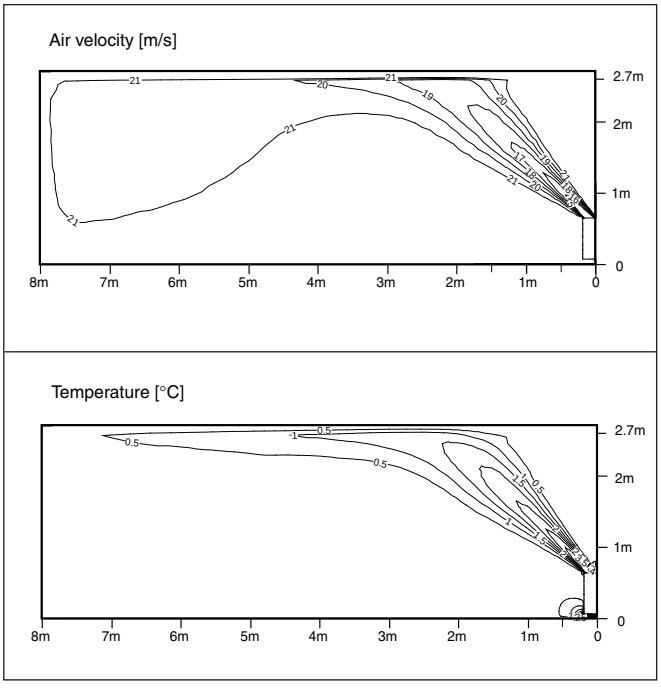

Heating

Discharge angle:60°

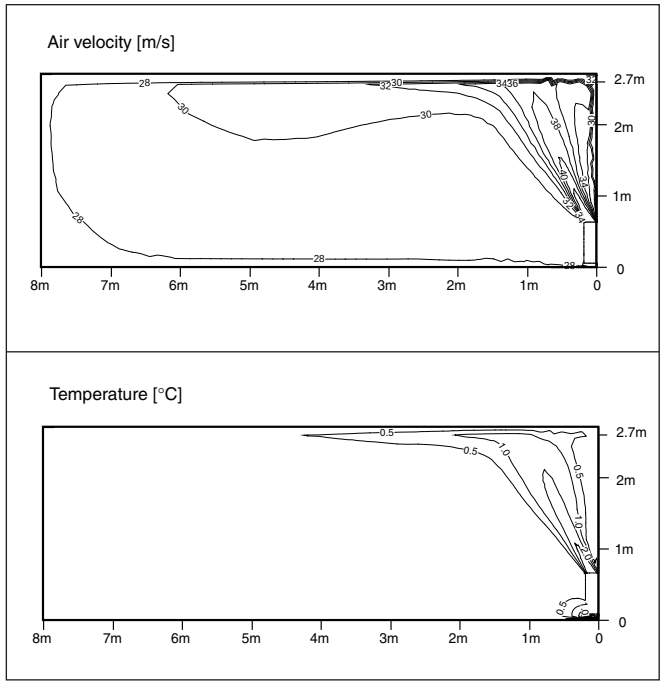

7. Air velocity and Temperature Distribution(Reference Data)

ARNU18GCFA4 /ARNU18GCFU4

Cooling

Discharge angle:45°

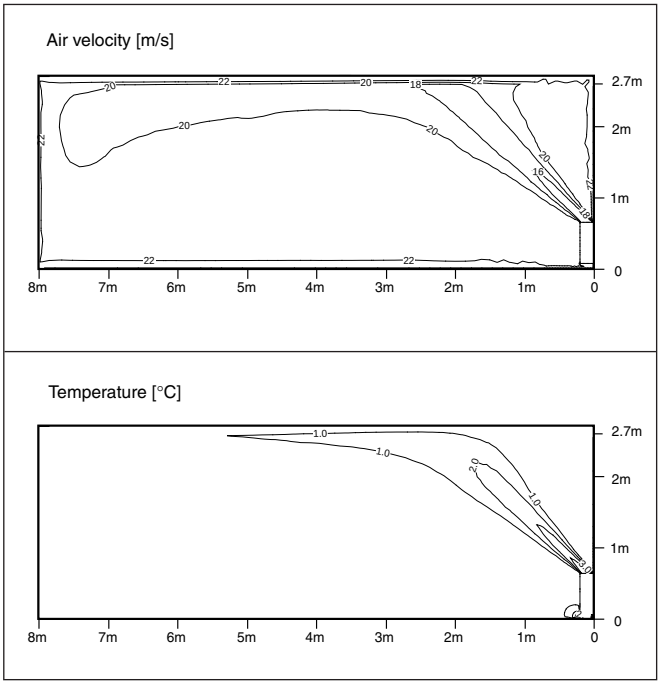

Heating

Discharge angle:60°

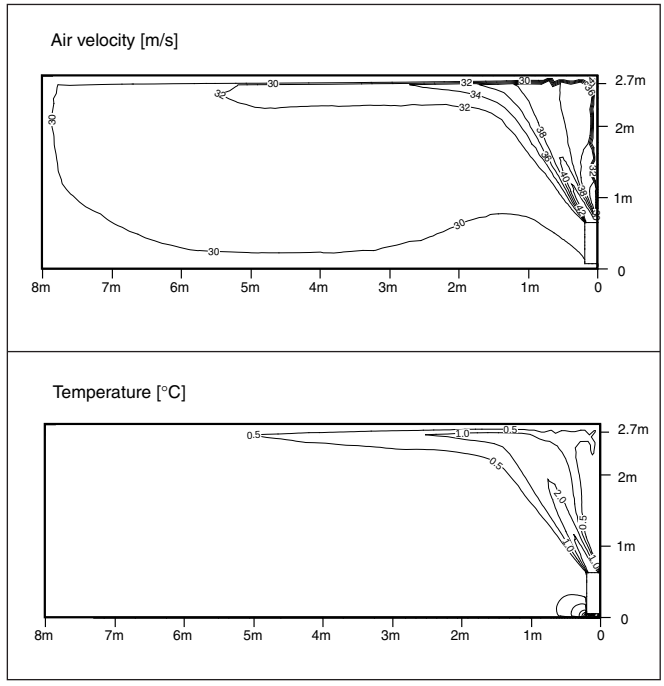

ARNU24GCFA4/ARNU24GCFU4

Cooling

Discharge angle:45°

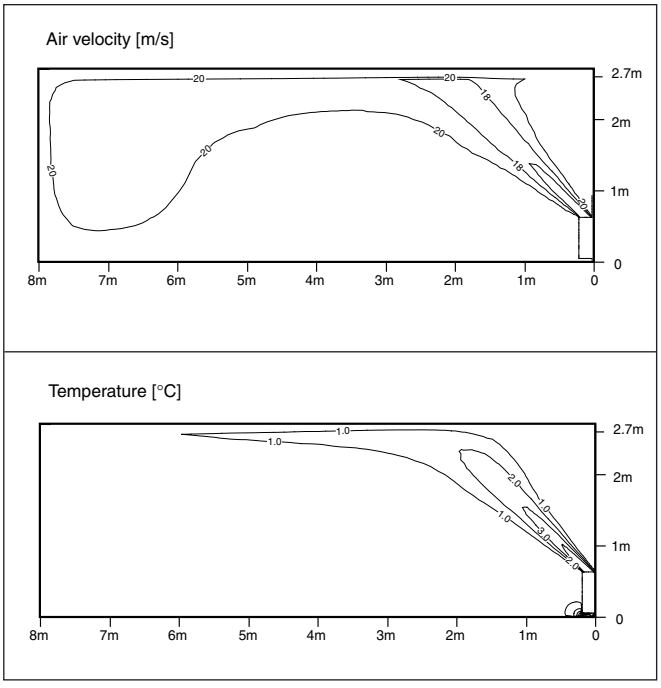

Heating

Discharge angle:60°

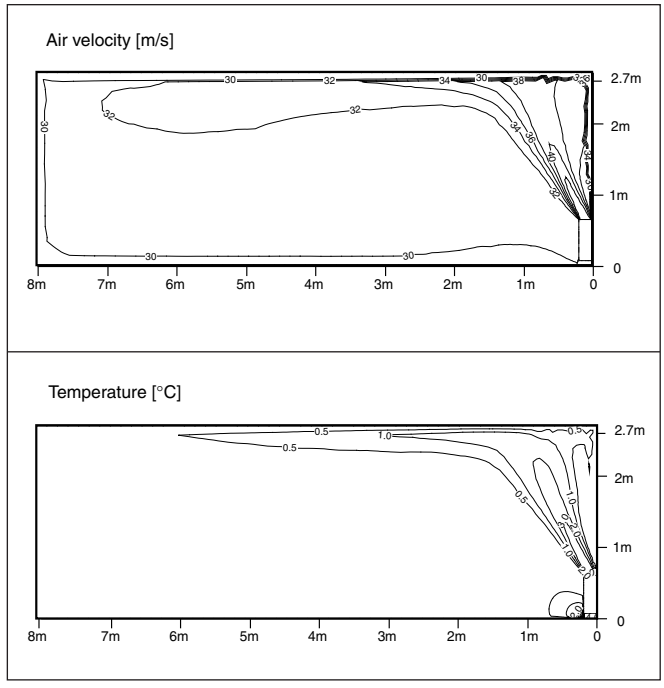

8. Electric Characteristics

Units					Power Supply		IFM		Input(W)	
Model	Type	Hz	Volts	Voltage Range	MCA	MFA	kW	FLA	Cooling	Heating
ARNU07GCEA4	CE	50	220-240	MAX.264 MIN.198	1.00	15	0.024	0.76	85	85
ARNU07GCEU4					1.00	15	0.024	0.76	85	85
ARNU09GCEA4	CE				1.00	15	0.024	0.76	85	85
ARNU09GCEU4					1.00	15	0.024	0.76	85	85
ARNU12GCEA4	CE				1.00	15	0.024	0.76	85	85
ARNU12GCEU4					1.00	15	0.024	0.76	85	85
ARNU15GCEA4	CE				1.00	15	0.024	0.76	85	85
ARNU15GCEU4					1.00	15	0.024	0.76	85	85
ARNU18GCFA4	CF				1.20	15	0.038	0.97	115	115
ARNU18GCFU4					1.20	15	0.038	0.97	115	115
ARNU24GCFA4	CF				1.20	15	0.038	0.97	115	115
ARNU24GCFU4					1.20	15	0.038	0.97	115	115
ARNU07GCEA4	CE	60	220	MAX.242 MIN.198	1.00	15	0.024	0.76	85	85
ARNU07GCEU4					1.00	15	0.024	0.76	85	85
ARNU09GCEA4	CE				1.00	15	0.024	0.76	85	85
ARNU09GCEU4					1.00	15	0.024	0.76	85	85
ARNU12GCEA4	CE				1.00	15	0.024	0.76	85	85
ARNU12GCEU4					1.00	15	0.024	0.76	85	85
ARNU15GCEA4	CE				1.00	15	0.024	0.76	85	85
ARNU15GCEU4					1.00	15	0.024	0.76	85	85
ARNU18GCFA4	CF				1.20	15	0.038	0.97	115	115
ARNU18GCFU4					1.20	15	0.038	0.97	115	115
ARNU24GCFA4	CF				1.20	15	0.038	0.97	115	115
ARNU24GCFU4					1.20	15	0.038	0.97	115	115

Symbols:

MCA: Minimum Circuit Amperes (A)
MFA : Maximum Fuse Amperes(see note 5)
kW : Fan Motor Rated Output(kW)
FLA : Full Load Amperes(A)
IFM : Indoor Fan Motor

Note :

1. Voltage Range
   Units are suitable for use on electrical system where voltage supplied to unit terminals is not below or above the listed range limits.
2. Maximum allowable voltage unbalance between phase is 2%.
3. MCA/MFA
   MCA = 1.25 x FLA
   MFA ≤ 4 x FLA
   (Next lower standard fuse rating. Minimum 15A)
4. Select wire size based on the MCA.
5. Instead of fuse, use Circuit Breaker.

9. Sound Levels

9.1 Sound Pressure Levels

Overall

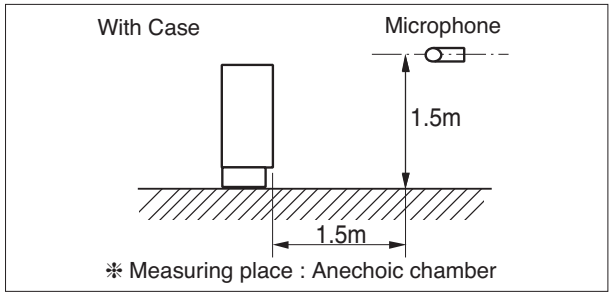

Notes:

1. Sound measured at 1.5m away from the center of the unit
2. Operating conditionl
   - Power source : 220-240V 50Hz / 220V 60Hz
   - Cooling : Indoor temperature (27°C DB, 19°C WB), Outdoor temperature (35°C DB, 24°C WB)
   - Heating : Indoor temperature (20°C DB, 15°C WB), Outdoor temperature (7°C DB, 6°C WB)
3. Reference accoustic pressure 0dB = 20μPa
4. Sound level will vary depending on a range of factors such as the construction(acoustic absorption coefficient) of particular room in which the equipment in installed.

Model		Sound Pressure Levels dB(A)		
		H	M	L
ARNU07GCEA4	ARNU07GCEA4	35	33	31
ARNU09GCEA4	ARNU09GCEA4	36	34	32
ARNU12GCEA4	ARNU12GCEA4	37	35	33
ARNU15GCEA4	ARNU15GCEA4	38	37	35
ARNU18GCFA4	ARNU18GCFA4	40	37	34
ARNU24GCFA4	ARNU24GCFA4	43	40	37

ARNU07GCEA4
ARNU07GCEU4

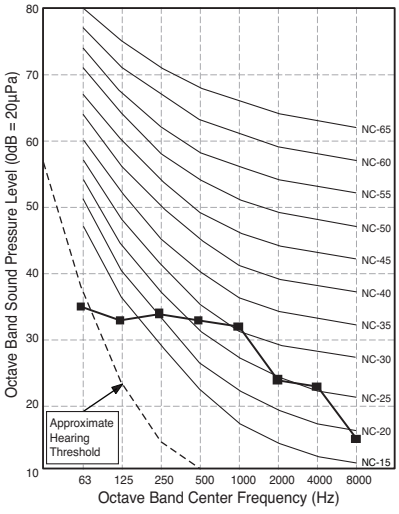

ARNU09GCEA4
ARNU09GCEU4

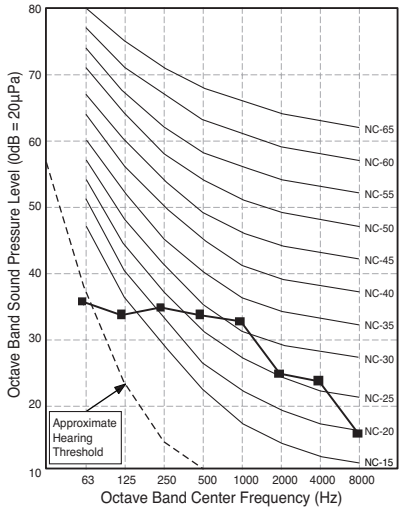

ARNU12GCEA4
ARNU12GCEU4

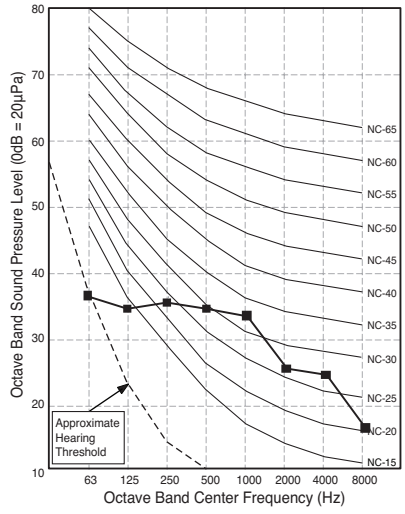

9. Sound Levels

ARNU15GCEA4
ARNU15GCEU4

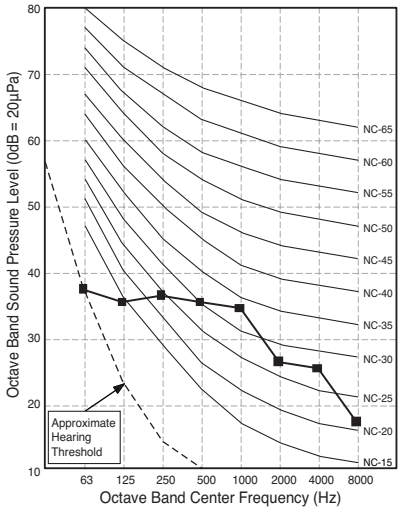

ARNU18GCFA4
ARNU18GCFU4

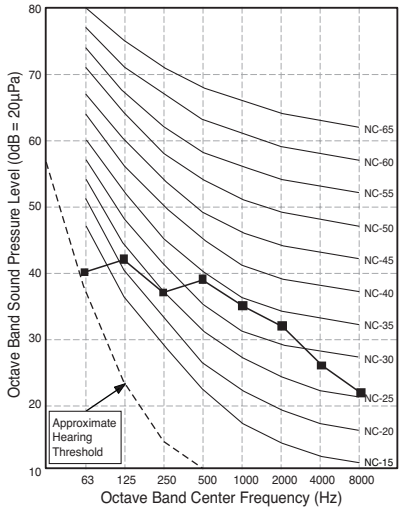

ARNU24GCFA4
ARNU24GCFU4

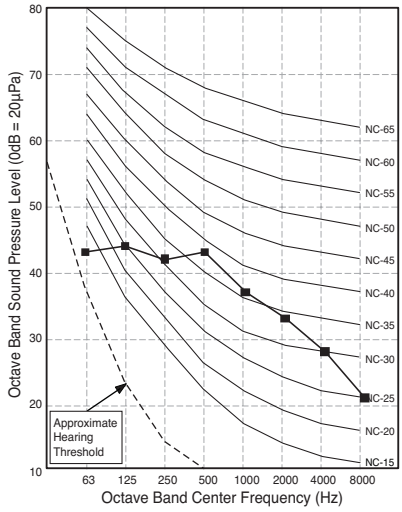

9. Sound Levels

9.2 Sound Power Levels

Model		Sound Power Levels dB(A)
		High Fan Speed
ARNU07GCEA4	ARNU07GCEA4	54.0
ARNU09GCEA4	ARNU09GCEA4	55.0
ARNU12GCEA4	ARNU12GCEA4	57.0
ARNU15GCEA4	ARNU15GCEA4	59.0
ARNU18GCFA4	ARNU18GCFA4	60.0
ARNU24GCFA4	ARNU24GCFA4	61.0

Notes:
- Data is valid at diffuse field condition
- Data is valid at nominal operating condition
- Sound level can be increased in static pressure mode or used air guide.
- Sound power level is measured on the rated condition in the reverberation rooms.
- Sound level will vary depending on a range of factors such as the construction (acoustic absorption coefficient) of particular room in which the equipment in installed.
- Reference acoustic intensity 0dB = 10E-6μW/m²

ARNU07GCEA4
ARNU07GCEU4

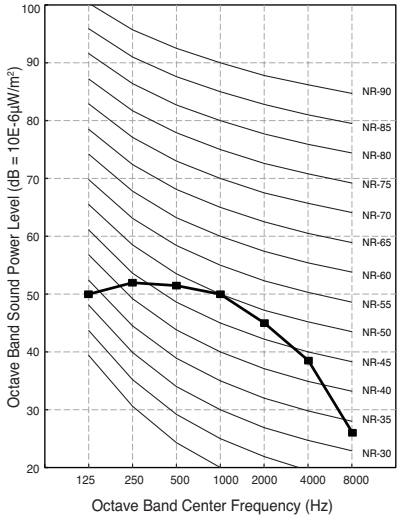

ARNU09GCEA4
ARNU09GCEU4

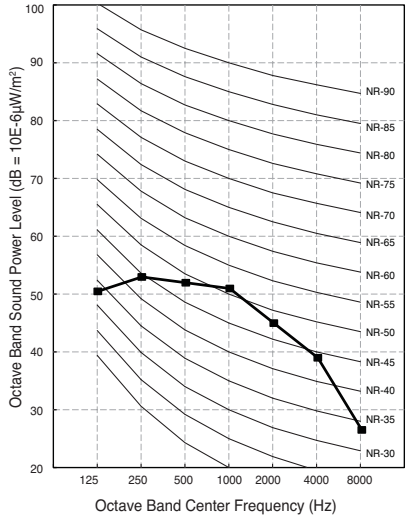

ARNU12GCEA4
ARNU12GCEU4

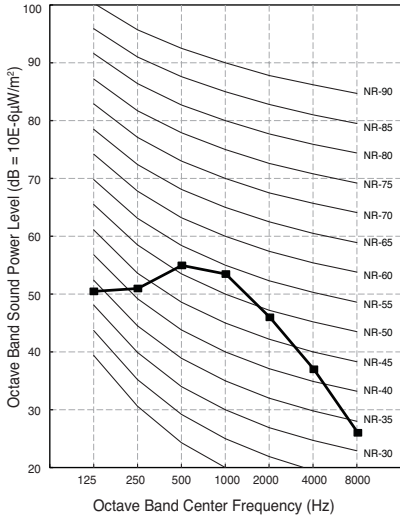

ARNU15GCEA4
ARNU15GCEU4

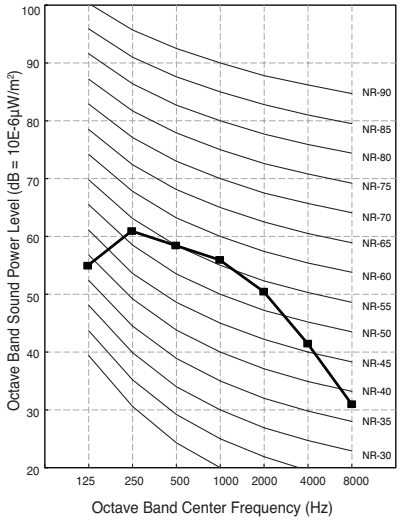

ARNU18GCFA4
ARNU18GCFU4

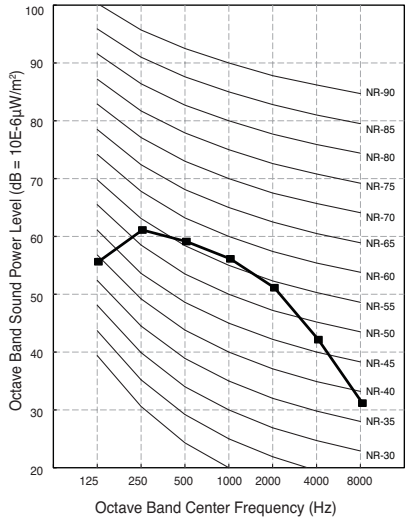

ARNU24GCFA4
ARNU24GCFU4

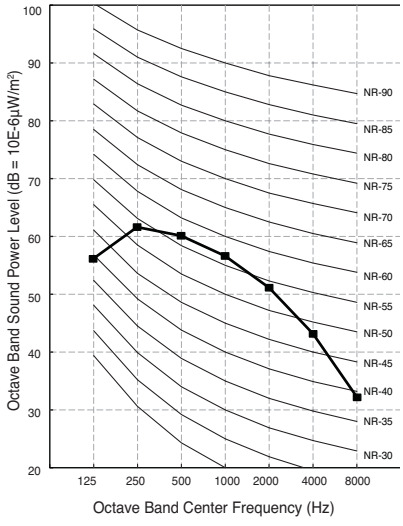

10. Installation

- Please read this instruction sheet completely before installing the product.
- When the power cord is damaged, replacement work shall be performed by authorized personnel only.
- Installation work must be performed in accordance with the national wiring standards by authorized personnel only.

10.1 Features

[CEA/CFA Type]

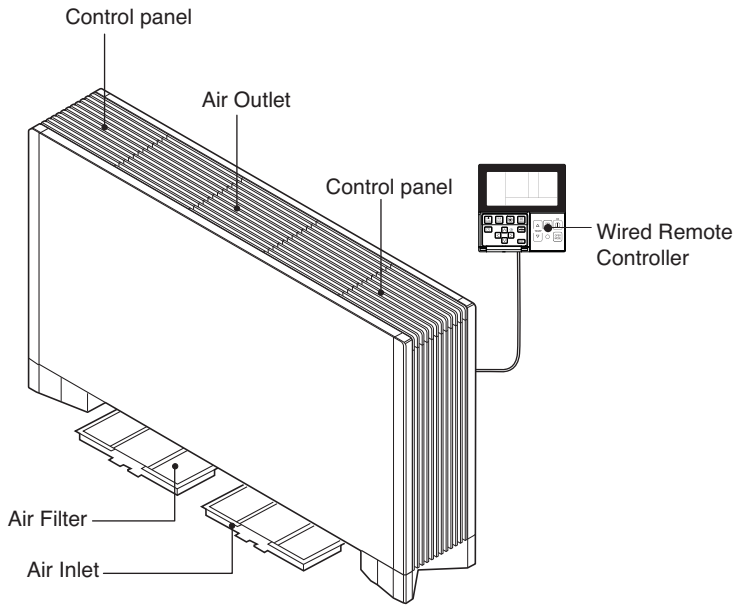

[CEU/CFU Type]

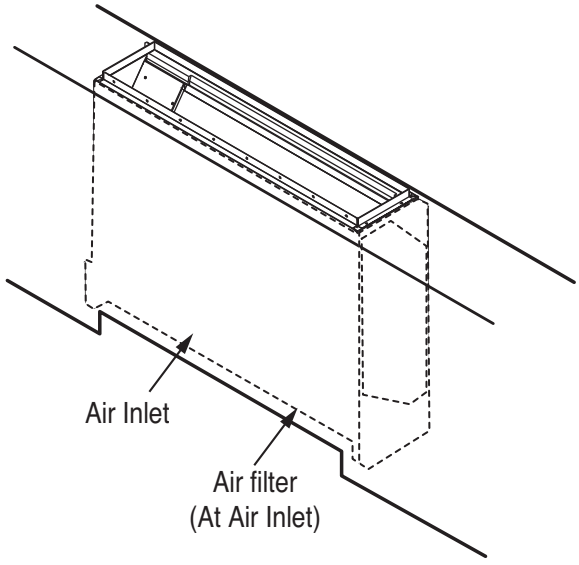

10.2 Selection of the best location

Indoor unit

Install the air conditioner in the location that satisfies the following conditions.

- The place shall easily bear a load exceeding four times the indoor unit's weight.
- Sufficient space should be available to inspect the unit as in the figure shown on the right.
- The place where the unit is installed shall be leveled.
- The place shall be suitable for easy connection of the indoor unit with the outdoor unit.
- The place where the unit is installed should not be affected by electrical noise.
- The place where air circulation in the room will be good .
- There should not be any heat source or steam near the unit

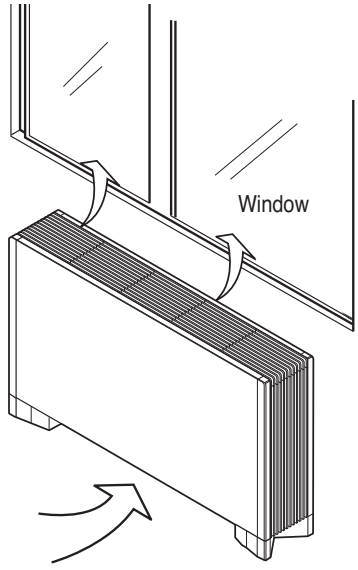

Service space

Select an installation site where the following conditions are satisfied and that meets your customer's approval.

- Where the floor is strong enough to bear the indoor unit weight.
- Where the floor is not significantly inclined.
- Where nothing blocks the air passage.
- Where condensate can be properly drained.
- Where sufficient clearance for installation and maintenance can be ensured.
- Where there is no possibility of flammable gas leakage.
- Where optimum air distribution can be ensured.
- Where piping between indoor and outdoor units is possible within the allowable limit (Refer to the installation manual of the outdoor unit.)
- Keep the indoor and outdoor unit, power cable and transmission wiring, at least 1m from TVs and radios, to prevent distorted pictures and static.(Depending on the type and source of the electrical waves, static may be heard even when more than 1 m away.)

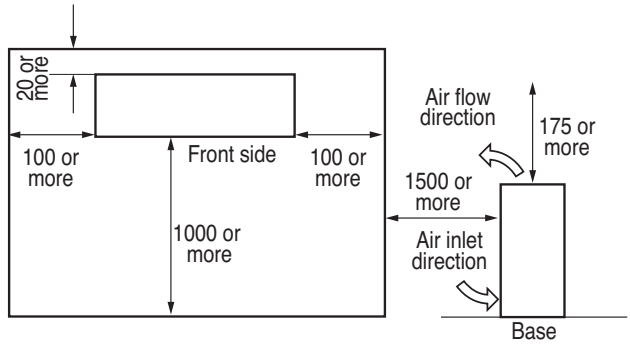

(Unit: mm)

Type	A	B
CEU Type	788	1080
CFU Type	1066	1358

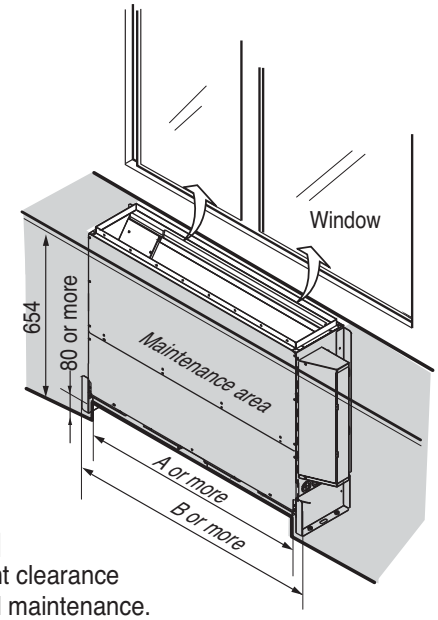

[IMPORTANT]
Leave sufficient clearance for air inlet and maintenance.

10. Installation

Bolt pitch

• Positioning of holes for fastening to the wall

(Unit:mm)

Type	A
CEA, CEU	858
CFA, CFU	1136

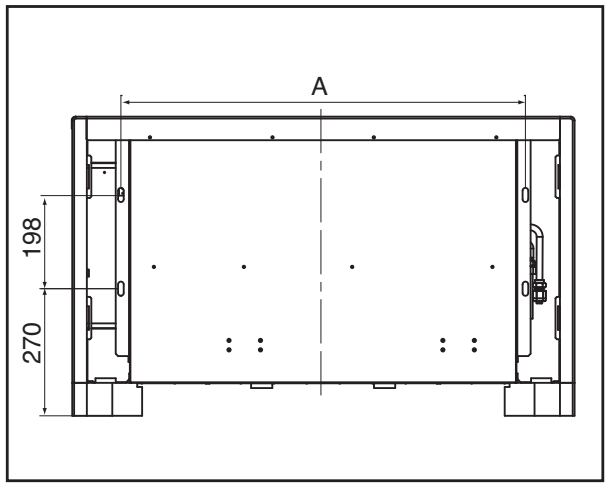

1. Use the Installation mount for installation. Check whether the wall is strong enough to bear the weight of the unit or not. if there is a risk, reinforce the wall before installing the unit.
2. The unit requires a minimum 100 mm clearance below the unit for air intake. Also, ensure the unit is leveled when installed so that drainage flows smoothly. If inclined, water can leak.
3. Depending upon the shape and nature of the wall surface, operating sound may become bigger.

How to open/close front panel

• How to open/close the front panel

(1) Open the lid of control panel(Both left and right)

(2) Remove screws(Both left and right)

(3) Lift the front panel of the unit

  • To close, perform the procedure in opposite order.

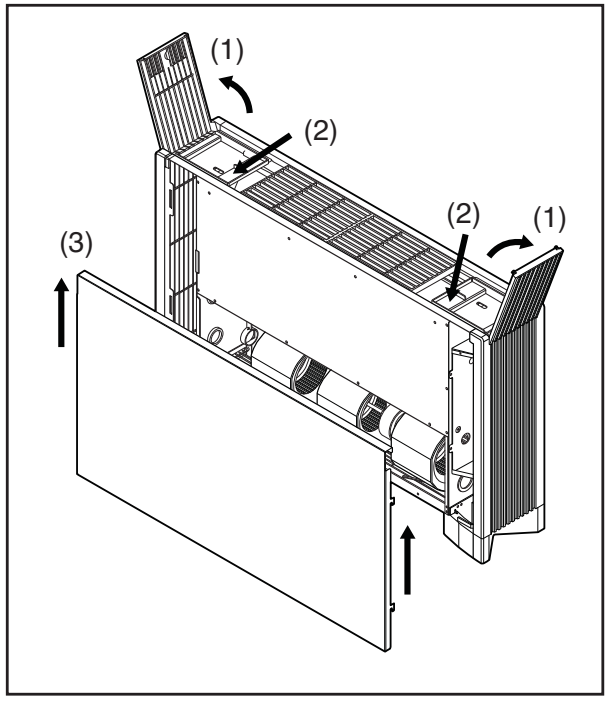

10.3 Drain piping work

- Drain piping must have downward slope(1/50 to 1/100): be sure not to provide up-and-down slope to prevent reverse flow.
- During drain piping connection, be careful not to exert extra force on the drain port on the indoor unit.
- The outside diameter of the drain connection to the indoor unit is 21mm.

Piping material: Polyvinyl chloride pipe 25mm and pipe fittings

- Be sure to install heat insulation on the drain piping

Heat insulation material: Polyethylene foam with thickness more than 10 mm.

- If converging multiple drain pipes, install according to the procedure shown below.

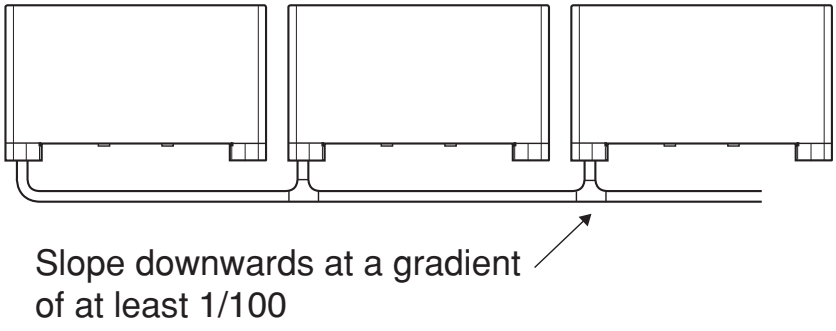

- After piping work is finished, check for drainage.
- Be sure to insulate all indoor units.

10.4 How to connect wirings

Remove the electric parts Box cover and connect the wiring

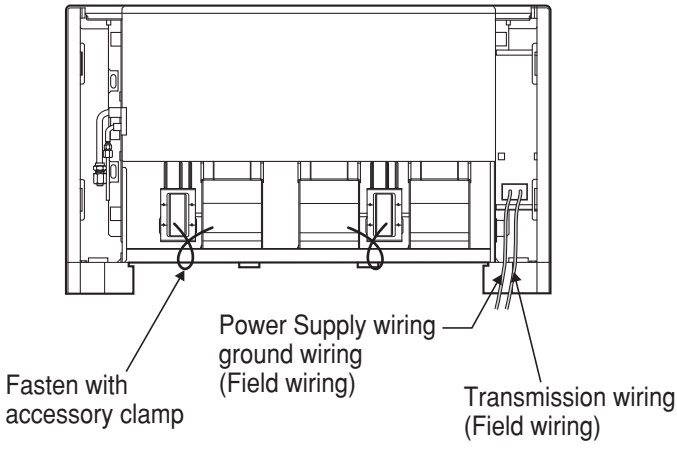

10.5 Wiring Connection

Connect the wires to the terminals on the control board individually according to the outdoor unit connection.
• Ensure that the color of the wires of outdoor unit and the terminal No. are the same as those of indoor unit respectively.

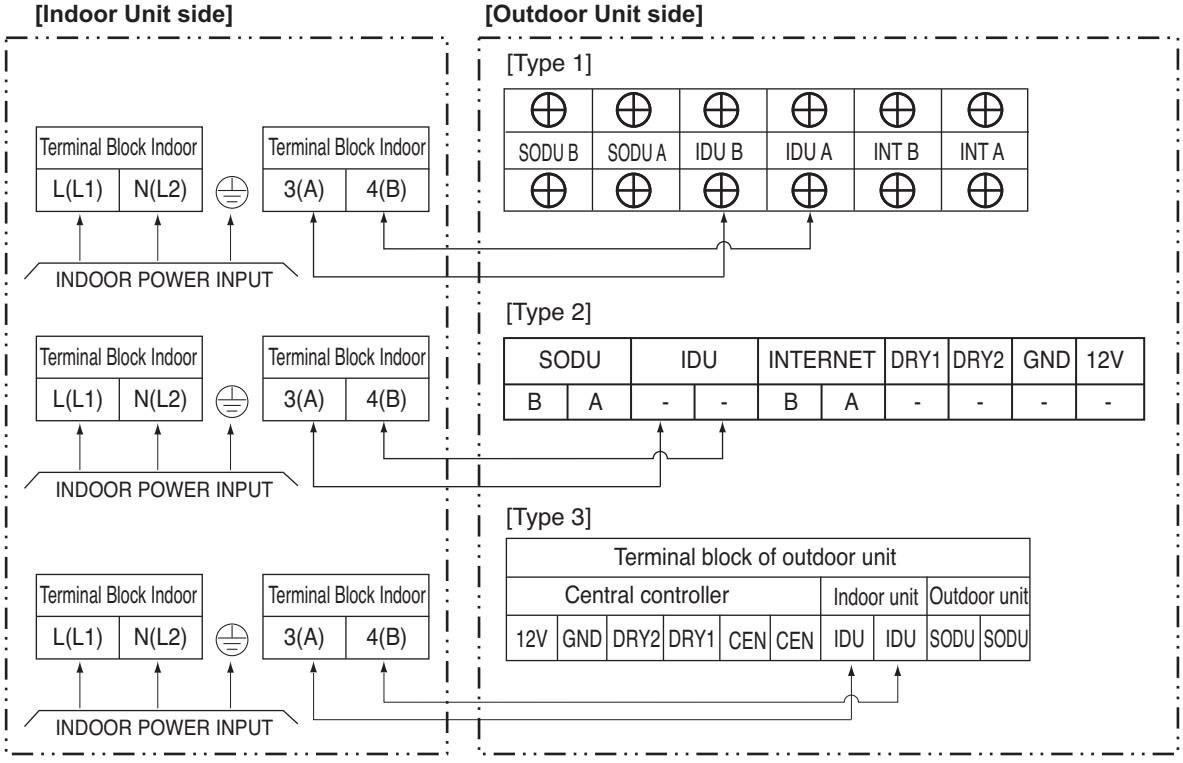

WARNING : Make sure that the screws of the terminal are free from looseness.

CAUTION:

After the confirmation of the above conditions, prepare the wiring as follows:

1) Never fail to have a separate power circuit specifically for the air conditioner. As for the method of wiring, follow the circuit diagram posted on the inside of control cover.
2) The screw which fasten the wiring in the casing of electrical fittings are liable to come loose from vibrations to which the unit is subjected during the course of transportation. Check them and make sure that they are all tightly fastened. (If they are loose, it could cause burn-out of the wires.)
3) Specification of power source.
4) Confirm that electrical capacity is sufficient.
5) See to that the starting voltage is maintained at more than 90 percent of the rated voltage marked on the name plate.
6) Confirm that the cable thickness is as specified in the power source specification. (Particularly note the relation between cable length and thickness.)
7) In a wet or moist area, always install an earth leakage circuit breaker.
8) The following would be caused by voltage drop.
• Vibration of a magnetic switch, which will damage the contact point, fuse breaking, disturbance of the normal function of the overload.
9) The means for disconnection from a power supply shall be incorporated in the fixed wiring and have an air gap contact separation of at least 3mm in each active(phase) conductor.

WIRED REMOTE CONTROLLER INSTALLATION

• Since the room temperature sensor is in the remote controller, the remote controller box should be installed in a place away from direct sunlight, high humidity and direct supply of cold air to maintain proper space temperature.
Install the remote controller about 5ft(1.5m) above the floor in an area with good air circulation at an average temperature.

Do not install the remote controller where it can be affected by:

- Drafts, or dead spots behind doors and in corners.
- Hot or cold air from ducts.
- Radiant heat from sun or appliances.
- Concealed pipes and chimneys.
- Uncontrolled areas such as an outside wall behind the remote controller.
- This remote controller is equipped with a seven segment LED. display. For proper display of the remote controller LED's, the remote controller should be installed properly as shown in Fig.1.
(The standard height is 1.2~1.5 m from floor level.)

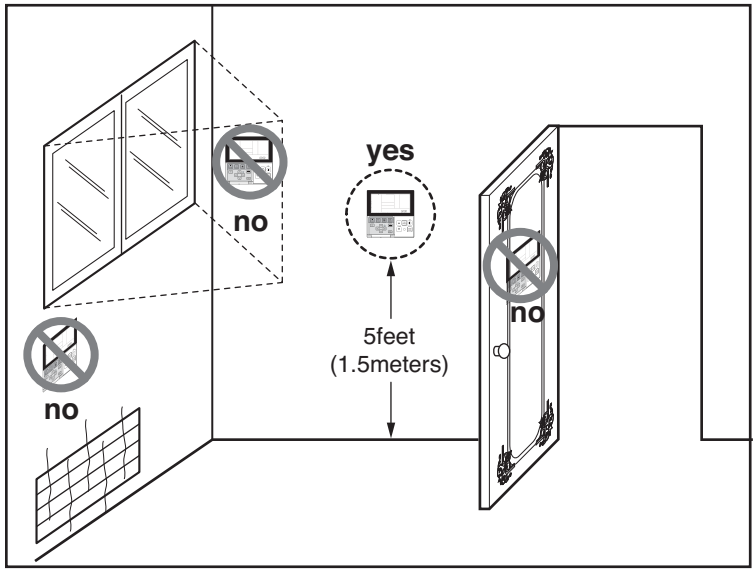

Fig.1 Typical locations for remote controller

11. Accessories

Standard Accessories

Name	Dran hose	Level adjustment screw	Insulation for fitting	Clamp (Tie Wrap)	[Other]
Quantity	1 EA	4	1 each.	8 pcs.	• Operation manual • Installation manual
Shape	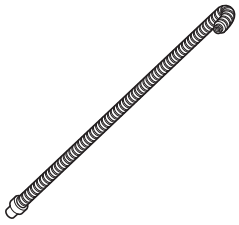		(1) For gas pipe 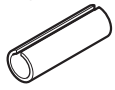 (2) For liquid pipe 	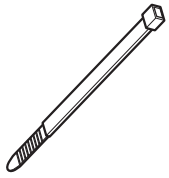	

⚠ CAUTION

• Use only those accessories (Standard or optional) which have designated specifications.

MULTI V™ Indoor unit

Fresh Air Intake Unit

1. List of functions
2. Specifications
3. Dimensions & Gravity point
4. Piping Diagrams
5. Wiring Diagrams
6. Capacity tables and air flow
7. External Static Pressure(E.S.P) & Air Flow
8. Electric Characteristics
9. Sound Levels
10. Operation range
11. Installation
12. Accessories

1. List of functions

Category	Function	ARNU48GBRZ4, ARNU76GB8Z4, ARNU96GB8Z4
Air flow	Air supply outlet	1
	Airflow direction control(left & right)	-
	Airflow direction control(up & down)	-
	Auto swing(left & right)	-
	Auto swing(up & down)	-
	Airflow steps(fan/cool/heat)	2/2/2
	Chaos swing	-
	Chaos wind(auto wind)	-
	Jet cool(Power wind)	-
	Swirl wind	-
Air purifying	Deodorizing filter	X
	Plasma air purifier	X
	Prefilter(washable / anti-fungus)	O
Installation	Drain pump	O
	E.S.P. control	O
	Electric heater(operation)	X
	High ceiling operation	-
Reliability	Hot start	O
	Self diagnosis	O
	Soft dry operation	O
Convenience	Auto changeover	-
	Auto cleaning	X
	Auto operation(artificial intelligence)	O(only heat pump or cooling only)
	Auto restart operation	O
	Child lock	O
	Forced operation	-
	Group control	O
	Sleep mode	X
	Timer(on/off)	O
	Timer(weekly)	O
	Two thermistor control	X
	External On/Off	O
Individual control	Wide wired remote controller (RS2)	PQRCVSL0/PQRCVSL0QW
	Wide wired remote controller (RS2 Plus)	PREMTB001/PREMTBB01
	Premium wired remote controller	PREMTA000/PREMTA000A/PREMTA000B
	Simple wired remote controller	PQRCVCL0Q(W)
	Wired remote controller(for hotel use)	PQRCHCA0Q(W)
	Wireless LCD remote control	PQWRH(C)Q0FDB
Special function kit	Zone control	-
	CTIE	-
	Electro thermostat	-
	Remote temperature sensor	PQRSTA0
	Group control wire	PZCWRCG3
	Dry contact	PDRYCB000/PDRYCB100/PDRYCB300/PDRYCB400/PDRYCB500

O : Applied X : Not applied – : No relation

Option : Model name & price are different according to options, and assembled in factory with main unit.

Accessory : Installed at field, ordered and purchased separately by the corresponding model name, supplied with separate package.

2. Specifications

Type			Fresh Air Intake Unit		
Model		Unit	ARNU48GBRZ4	ARNU76GB8Z4	ARNU96GB8Z4
Cooling Capacity		kW	14.1	22.4	28
		kcal/h	12,100	19,300	24,100
		Btu/h	48,100	76,400	95,900
Heating Capacity		kW	13.5	21.4	26.7
		kcal/h	11,620	18,410	23,000
		Btu/h	46,115	73,080	91,360
Casing			Galvanized Steel Plate	Galvanized Steel Plate	Galvanized Steel Plate
Dimensions(WxHxD)	Body	mm	1,230 x 380 x 590	1,562 x 460 x 688	1,562 x 460 x 688
		inch	48-7/16 x 14-31/32 x 23-7/32	61-1/2 x 18-1/8 x 27-3/32	61-1/2 x 18-1/8 x 27-3/32
Coil	Rows x Columns x FPI		3 x 13 x 19	3 x 20 x 19	3 x 20 x 19
	Face Area	m^2	0.38	0.59	0.59
Fan	Type		Sirocco Fan	Sirocco Fan	Sirocco Fan
	Motor Output x Number	W	195 x 1	375 x 1	375 x 1
	Running Current	A	0.78	1.36	2.15
	Air Flow Rate(H/M/L)	CMM	18.8/14.7/14.7	23.7/13.2/13.2	35.7/23.7/23.7
	(High Mode-factory set)	cfm	664/519/519	837/446/446	1261/837/837
	External Static Pressure	mmAq(Pa)	18	22	22
	Drive		Direct	Direct	Direct
	Motor type		BLDC	BLDC	BLDC
Temperature Control			Microprocessor, Thermostat for cooling and heating	Microprocessor, Thermostat for cooling and heating	Microprocessor, Thermostat for cooling and heating
Sound Absorbing Thermal Insulation Material			Foamed polystrene	Foamed polystrene	Foamed polystrene
Air Filter			Long Life Filter	Long Life Filter	Long Life Filter
Safety Device			Fuse	Fuse	Fuse
Pipe Connections	Liquid Side	mm(inch)	Ø9.52(3/8)	Ø9.52(3/8)	Ø9.52(3/8)
	Gas Side	mm(inch)	Ø15.88(5/8)	Ø19.05(3/4)	Ø22.2(7/8)
	Drain Pipe(Internal Dia.)	mm	25	25	25
Net Weight		kg(lbs)	45(99)	73(161)	73(161)
Noise Level(Sound Press, 1.5m, H/M/L)		dB(A)	41/40/38	45/43/43	47/45/45
Power Supply		Ø, V, Hz	1, 220 - 240, 50	1, 220 - 240, 50	1, 220 - 240, 50
			1, 220, 60	1, 220, 60	1, 220, 60
Refrigerant Control			EEV	EEV	EEV
Power cable		mm^2	CV1.5 x 3C	CV1.5 x 3C	CV1.5 x 3C
Transmission cable		mm^2	VCTF-SB1.0 ~ 1.5 x 2C	VCTF-SB 1.0 ~ 1.5 x 2C	VCTF-SB 1.0 ~ 1.5 x 2C

Notes:

1. Capacities are based on the following conditions:
   - Cooling
     - Outdoor temp. 33°C[91.4°F]DB/ 28°C[82.4°F]WB
     - Interconnecting Piping Length 7.5m
     - Level Difference of Zero
   - Heating
     - Outdoor temp. 0°C[32°F]DB/ -2.9°C[26.78°F]WB
     - Interconnecting Piping Length 7.5m
     - Level Difference of Zero
2. Capacities are net capacities
3. Due to our policy of innovation some specifications may be changed without prior notification
4. To be added for more available Models
5. Indoor Unit Connection

No	Connection Condition	Combination
1	Fresh Air Intake Units only are connected with outdoor units	1) The total capacity of Fresh Air Intake Unit should be 50~100% of outdoor unit. 2) The max quantity of Fresh Air Intake unit is 4 Units.
2	Mixture connection with general Indoor unit and Fresh Intake Unit	1) The total capacity of indoor units (standard Indoor Unit + Fresh Air Intake Unit) should be 50~100% of outdoor unit. 2) The total capacity of Fresh Air Intake Unit should be less than 30% of the total capacity of indoor units.

6. EEV : Electronic Expansion Valve
7. Noise Level is Standard Mode
   (for actual High Mode(factory set) condition, Noise Level may exceed the standard level by 1.5dBA)

Conversion Formula
kcal/h= kW x 860
Btu/h = kW x 3412
cfm = m^3/min x 35.3
l/s = CMM x 1000/60

3. Dimensions & Gravity point

Fresh Air Intake Unit

ARNU48GBRZ4

(unit : mm)

Number	Name	Description
1	Liquid pipe connection	Unit size(48k):ø9.52
2	Gas pipe connection	Unit size(48k):ø15.88
3	Drain pipe connection	Unit size(48k):ø25
4	Power supply connection	
5	Air discharge	
6	Air suction	

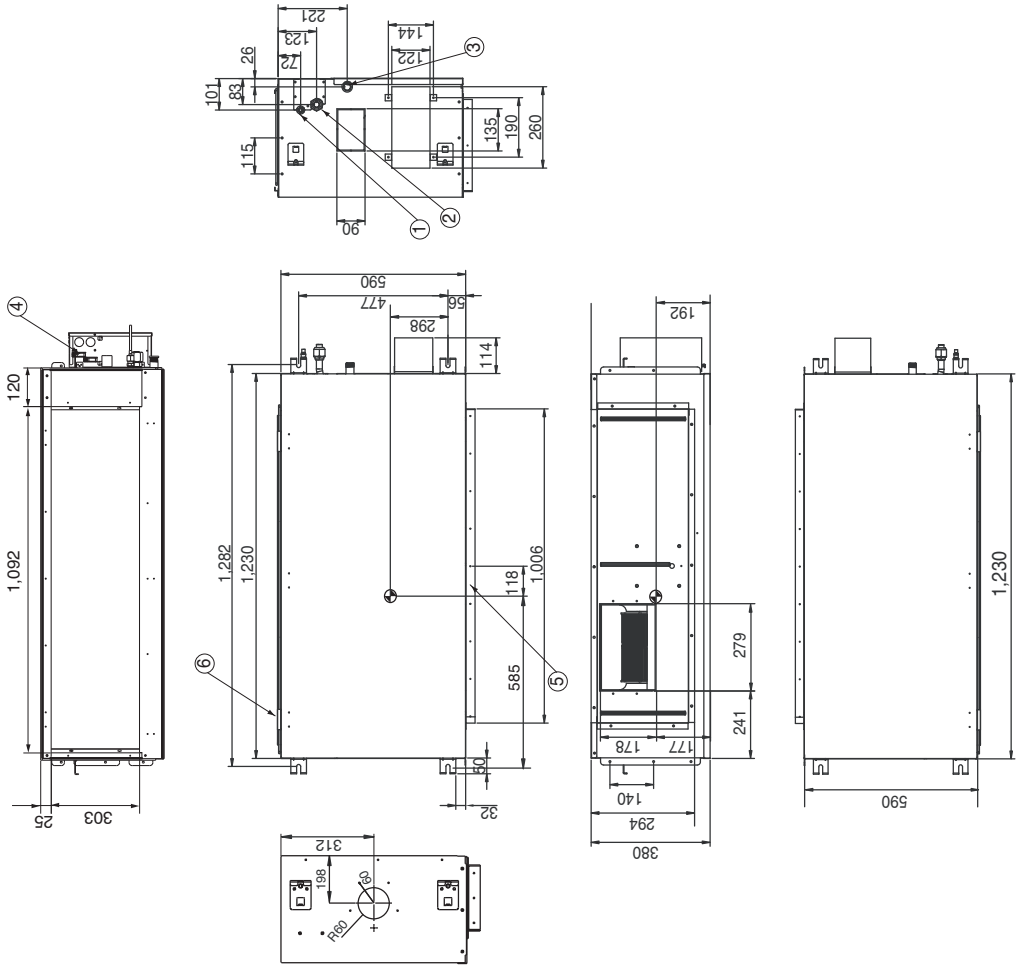

▣ Note

1. Unit should be installed in compliance with the installation manual in the product box.
2. Unit shall be grounded in accordance with the local regulations or applicable national codes.

◔ Gravity point

LG Electronics

76, Seongsan-dong, Changwon City, Gyeongnam, 641-713, Korea

CHASSIS CODE: BR

3. Dimensions & Gravity point

Fresh Air Intake Unit

ARNU76GB8Z4
ARNU96GB8Z4

(unit : mm)

Number	Name	Description
1	Liquid pipe connection	Unit size(76k, 96k):ø19.05
2	Gas pipe connection	Unit size(76k):ø19.05 Unit size(96k):ø22.2
3	Drain pipe connection	Unit size(76k, 96k): ø22.2
4	Power supply connection	
5	Air discharge	
6	Air suction	

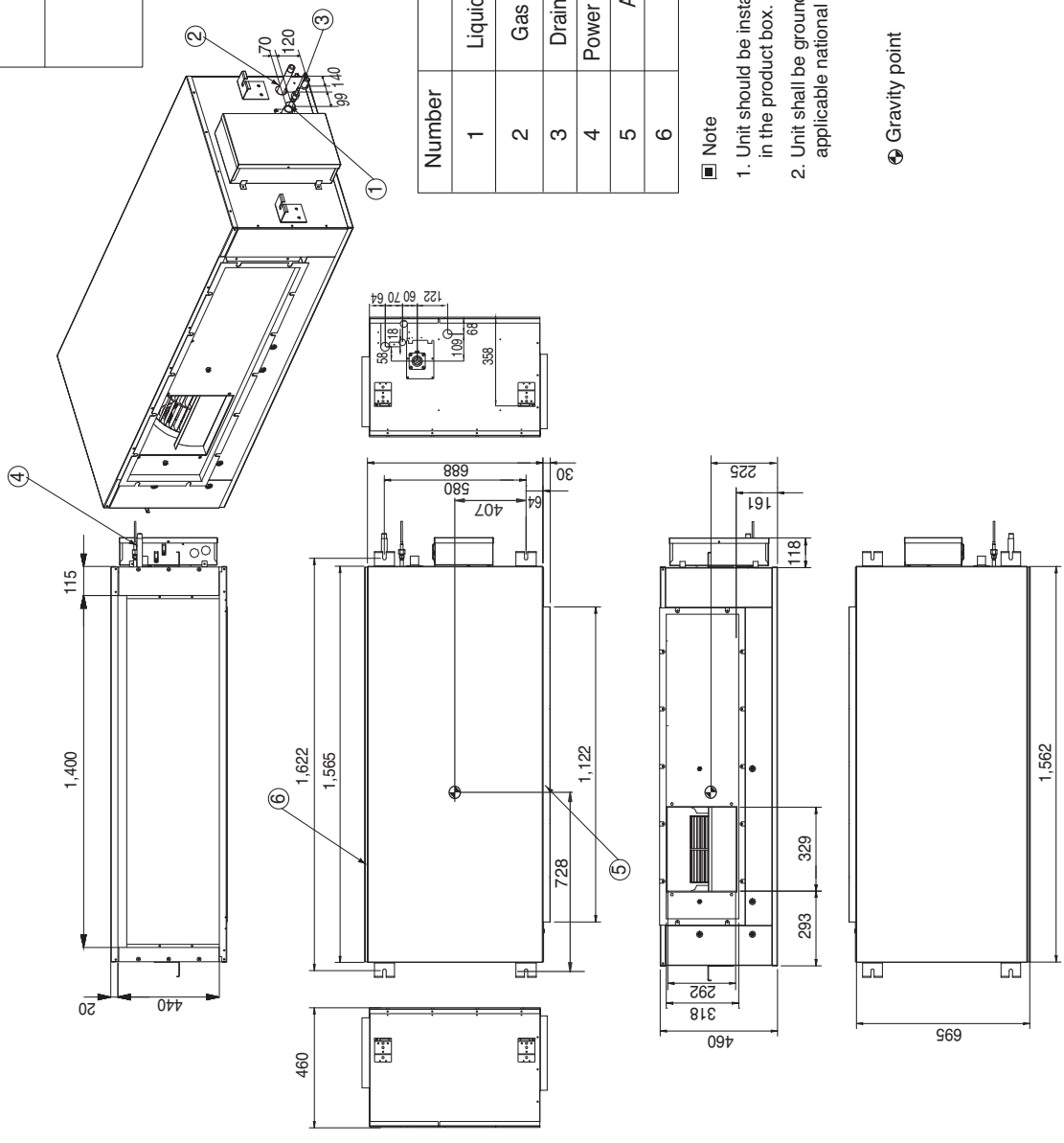

▣ Note

1. Unit should be installed in compliance with the installation manual in the product box.
2. Unit shall be grounded in accordance with the local regulations or applicable national codes.

◈ Gravity point

LG Electronics

76, Seongsan-dong, Changwon City, Gyeongnam, 641-713, Korea

CHASSIS CODE: B8

4. Piping Diagrams

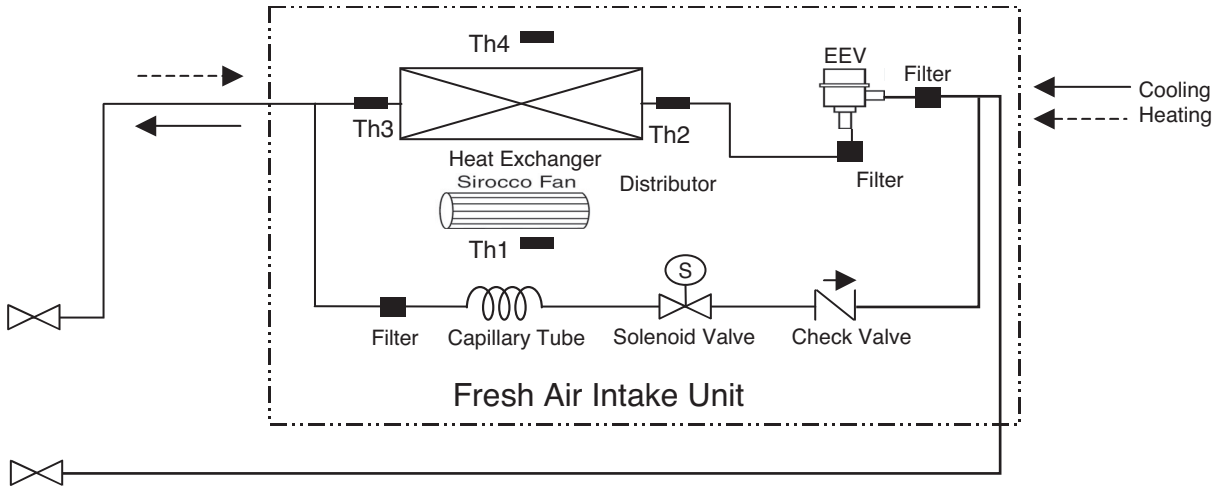

Refrigerant pipe connection port diameter

[Unit: mm(inch)]

MODEL	GAS	LIQUID
ARNU48GBRZ4	Ø15.88(5/8)	Ø9.52(3/8)
ARNU76GB8Z4	Ø19.05(6/8)	Ø9.52(3/8)
ARNU96GB8Z4	Ø22.2(7/8)	Ø9.52(3/8)

LOC.	Description
Th1	Inlet Air Thermistor
Th2	Pipe In Thermistor
Th3	Pipe Out Thermistor
Th4	Outlet Air Thermistor

5. Wiring Diagrams

BR Chassis

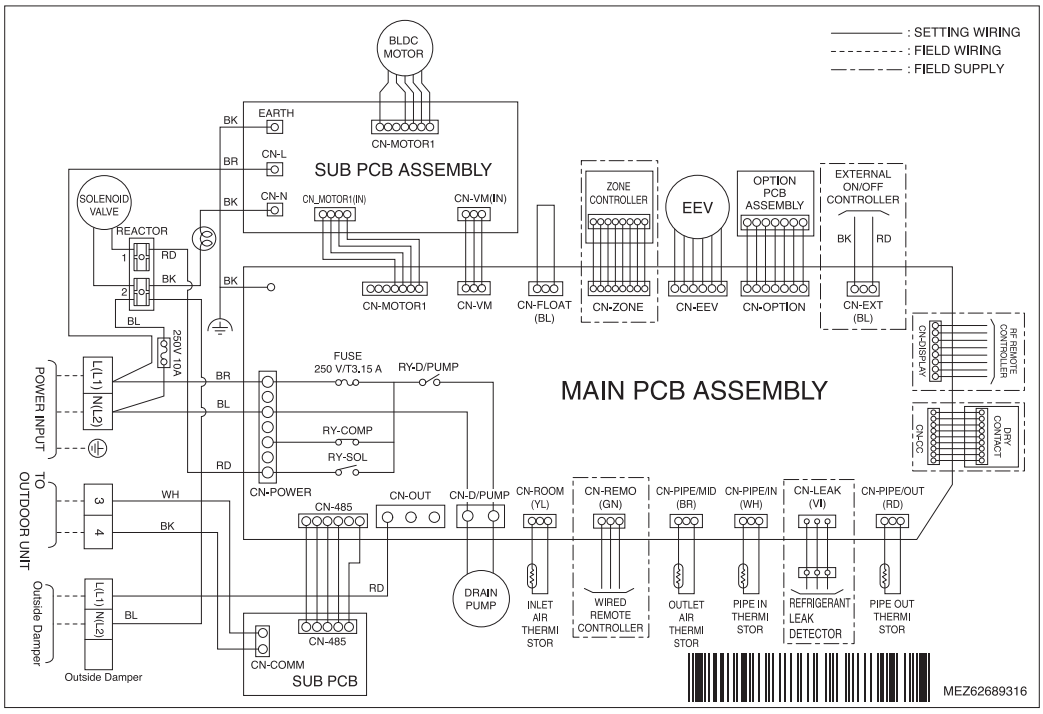

B8 Chassis

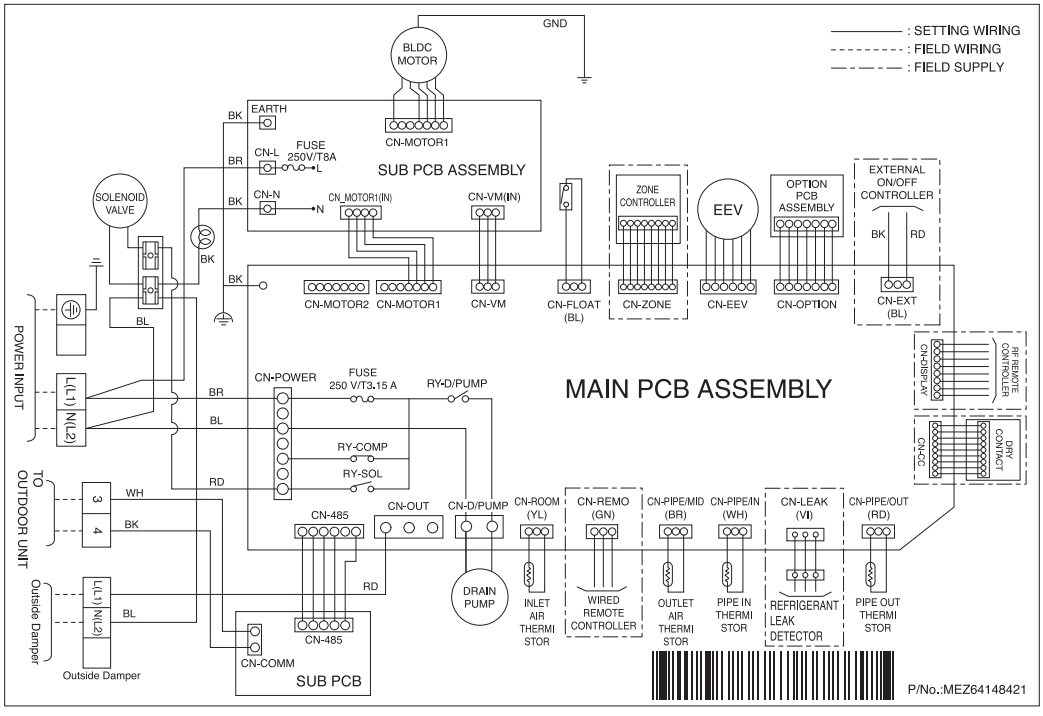

6. Capacity tables and air flow

6.1 Capacity tables

ARNU48GBRZ4

Cooling

Outdoor air temperature		59°FWB		63°FWB		69°FWB		73°FWB		79°FWB		82°FWB		86°FWB		90°FWB		95°FWB		100°FWB	
		15°CWB		17°CWB		20°CWB		23°CWB		26°CWB		28°CWB		30°CWB		32°CWB		35°CWB		38°CWB	
°FDB	°CDB	TC	SHC	TC	SHC	TC	SHC	TC	SHC	TC	SHC	TC	SHC	TC	SHC	TC	SHC	TC	SHC	TC	SHC
70	21	5.1	3.6	5.4	3.2	8.5	3.2	-	-	-	-	-	-	-	-	-	-	-	-	-	-
73	23	5.1	4.3	5.2	3.9	8.2	3.7	-	-	-	-	-	-	-	-	-	-	-	-	-	-
77	25	5.1	5.0	5.2	4.6	8.0	4.4	11.0	4.6	-	-	-	-	-	-	-	-	-	-	-	-
81	27	5.0	5.0	5.1	5.1	7.3	5.1	10.9	4.8	14.0	4.5	-	-	-	-	-	-	-	-	-	-
84	29	4.9	4.9	5.0	5.0	7.0	5.8	10.5	6.5	13.7	4.8	15.5	5.0	-	-	-	-	-	-	-	-
88	31	4.9	4.9	5.0	5.0	6.7	6.5	9.5	6.0	13.3	5.5	15.1	5.3	16.3	4.6	-	-	-	-	-	-
91	33	4.8	4.8	4.9	4.9	6.5	6.3	9.4	6.7	13.0	6.1	14.1	5.6	16.1	4.8	17.7	5.0	-	-	-	-
96	35	4.8	4.8	4.9	4.9	6.4	6.4	9.2	7.4	12.7	6.8	14.0	6.2	15.9	5.5	17.5	5.2	-	-	-	-
99	37	4.7	4.7	4.8	4.8	6.3	6.3	9.1	8.5	11.8	7.4	13.7	6.9	15.3	6.2	17.3	5.6	18.9	5.4	-	-
104	40	4.7	4.7	4.8	4.8	6.2	6.2	9.0	8.8	11.4	8.5	13.4	7.0	15.0	7.2	17.1	6.7	18.7	5.7	21.7	4.6
109	43	-	-	4.7	4.7	6.1	6.1	8.9	8.9	11.0	9.0	13.0	7.5	14.5	8.5	16.5	7.7	18.4	6.7	20.9	5.5
113	45	-	-	4.1	4.1	5.7	5.7	8.4	8.4	10.2	9.5	12.2	8.2	13.9	9.2	16.0	8.2	17.1	7.1	19.5	6.0
118	48	-	-	-	-	5.2	5.2	8.1	8.1	10.5	9.8	11.3	9.2	13.0	9.9	15.2	9.3	16.6	6.9	18.5	6.9

Heating

Outdoor air temperature		19°FWB	23°FWB	27°FWB	32°FWB	36°FWB	39°FWB	43°FWB	50°FWB	57°FWB
		-7°CWB	-5°CWB	-2.9°CWB	0°CWB	2°CWB	4°CWB	6°CWB	10°CWB	14°CWB
°FDB	°CDB	TC	TC	TC	TC	TC	TC	TC	TC	TC
23	-5	14.7	-	-	-	-	-	-	-	-
27	-3	14.2	14.4	-	-	-	-	-	-	-
32	0	-	14.0	14.2	-	-	-	-	-	-
37	3	-	-	13.6	13.8	14.0	-	-	-	-
45	7	-	-	-	12.3	12.5	12.7	12.6	-	-
52	11	-	-	-	-	10.8	11.0	11.2	11.3	-
59	15	-	-	-	-	-	9.5	9.7	9.9	10.1
64	18	-	-	-	-	-	-	8.7	8.9	9.0
68	20	-	-	-	-	-	-	7.8	8.0	8.1

Note)
TC: Total Capacity (kW), SHC: Sensible Heat Capacity (kW)
WB: Wet Bulb, DB: Dry Bulb

1. The data shown in the table illustrates the supported operating ranges under the following conditions:
   - Indoor and Outdoor Unit
   - Effective piping length: 7.5 m
   - Height differential: 0 m
2. The actual temperature may not match the temperature setting under some circumstances due to the outdoor-air processing load or mechanical protection controls.
3. The system will not operate in fan mode when the outdoor air temperature is -5°C or below.
4. ▭ Tropical region only.

6. Capacity tables and air flow

ARNU76GB8Z4

Cooling

Outdoor air temperature		59°FWB		63°FWB		69°FWB		73°FWB		79°FWB		82°FWB		86°FWB		90°FWB		95°FWB		100°FWB	
		15°CWB		17°CWB		20°CWB		23°CWB		26°CWB		28°CWB		30°CWB		32°CWB		35°CWB		38°CWB	
°FDB	°CDB	TC	SHC	TC	SHC	TC	SHC	TC	SHC	TC	SHC	TC	SHC	TC	SHC	TC	SHC	TC	SHC	TC	SHC
70	21	8.0	5.2	9.5	5.2	12.6	5.3	-	-	-	-	-	-	-	-	-	-	-	-	-	-
73	23	7.9	6.1	9.0	6.1	12.4	5.7	-	-	-	-	-	-	-	-	-	-	-	-	-	-
77	25	7.8	7.0	8.7	7.0	12.0	6.7	16.0	6.4	-	-	-	-	-	-	-	-	-	-	-	-
81	27	7.7	7.2	8.8	7.9	11.8	7.5	15.7	6.9	19.6	6.9	-	-	-	-	-	-	-	-	-	-
84	29	7.6	7.4	8.6	8.0	11.5	8.4	15.3	7.7	19.4	7.3	23.5	7.2	-	-	-	-	-	-	-	-
88	31	7.5	7.5	8.5	8.1	11.4	9.4	15.0	8.6	19.2	8.2	23.0	7.7	24.2	7.2	-	-	-	-	-	-
91	33	7.5	7.5	8.4	8.3	11.1	9.7	14.7	9.5	18.9	9.1	22.4	8.5	23.8	7.6	27.0	7.5	-	-	-	-
96	35	7.4	7.4	8.4	8.4	10.9	10.1	14.4	10.4	18.7	9.9	21.5	9.3	23.1	8.3	26.7	8.1	-	-	-	-
99	37	7.4	7.4	8.3	8.3	10.5	10.4	14.0	11.0	18.4	10.8	20.9	10.1	22.9	9.2	26.4	8.7	31.9	8.7	-	-
104	40	7.3	7.3	8.3	8.3	10.5	10.5	13.5	12.1	17.6	12.0	20.8	11.5	22.5	10.5	26.2	10.1	31.2	9.3	34.4	7.2
109	43	-	-	8.1	8.1	10.4	10.4	12.9	12.8	17.0	12.9	20.1	11.9	22.4	11.5	25.2	11.0	30.0	10.3	33.5	8.7
113	45	-	-	7.7	7.7	10.1	10.1	12.5	12.5	16.2	13.7	19.5	12.8	21.6	12.1	24.3	11.9	25.2	9.9	30.3	8.9
118	48	-	-	-	-	9.5	9.5	12.1	12.1	15.7	14.2	18.7	13.4	20.9	12.9	23.6	12.5	21.3	10.4	25.3	9.1

Heating

Outdoor air temperature		19°FWB	23°FWB	27°FWB	32°FWB	36°FWB	39°FWB	43°FWB	50°FWB	57°FWB
		-7°CWB	-5°CWB	-2.9°CWB	0°CWB	2°CWB	4°CWB	6°CWB	10°CWB	14°CWB
°FDB	°CDB	TC	TC	TC	TC	TC	TC	TC	TC	TC
23	-5	23.8	-	-	-	-	-	-	-	-
27	-3	22.4	22.6	-	-	-	-	-	-	-
32	0	-	21.2	21.4	-	-	-	-	-	-
37	3	-	-	17.9	18.1	18.2	-	-	-	-
45	7	-	-	-	16.1	16.3	16.5	16.7	-	-
52	11	-	-	-	-	14.3	14.5	14.7	14.9	-
59	15	-	-	-	-	-	12.6	12.8	13.0	13.2
64	18	-	-	-	-	-	-	11.4	11.6	11.8
68	20	-	-	-	-	-	-	10.7	10.9	11.1

Note)
TC: Total Capacity (kW), SHC: Sensible Heat Capacity (kW)
WB: Wet Bulb, DB: Dry Bulb

1. The data shown in the table illustrates the supported operating ranges under the following conditions:
   - Indoor and Outdoor Unit
   - Effective piping length: 7.5 m
   - Height differential: 0 m
2. The actual temperature may not match the temperature setting under some circumstances due to the outdoor-air processing load or mechanical protection controls.
3. The system will not operate in fan mode when the outdoor air temperature is -5°C or below.
4. ▭ Tropical region only.

6. Capacity tables and air flow

ARNU96GB8Z4

Cooling

Outdoor air temperature		59°FWB		63°FWB		69°FWB		73°FWB		79°FWB		82°FWB		86°FWB		90°FWB		95°FWB		100°FWB	
		15°CWB		17°CWB		20°CWB		23°CWB		26°CWB		28°CWB		30°CWB		32°CWB		35°CWB		38°CWB	
°FDB	°CDB	TC	SHC	TC	SHC	TC	SHC	TC	SHC	TC	SHC	TC	SHC	TC	SHC	TC	SHC	TC	SHC	TC	SHC
70	21	10.2	6.9	13.2	6.9	17.1	7.2	-	-	-	-	-	-	-	-	-	-	-	-	-	-
73	23	10.0	8.3	12.8	8.0	16.7	7.8	-	-	-	-	-	-	-	-	-	-	-	-	-	-
77	25	9.8	9.0	12.1	9.0	16.1	9.2	22.3	9.0	-	-	-	-	-	-	-	-	-	-	-	-
81	27	9.7	9.2	11.4	10.3	15.6	10.5	21.5	9.5	27.4	9.7	-	-	-	-	-	-	-	-	-	-
84	29	9.5	9.3	11.2	10.6	15.2	11.8	20.9	10.8	26.9	10.1	30.2	9.3	-	-	-	-	-	-	-	-
88	31	9.4	9.4	11.1	10.7	15.2	13.3	20.4	12.1	26.6	11.5	29.8	10.0	33.8	10.1	-	-	-	-	-	-
91	33	9.4	9.4	11.0	10.8	14.8	13.7	20.0	13.5	26.1	12.8	28.0	10.6	33.2	10.6	38.0	11.2	-	-	-	-
96	35	9.3	9.3	11.0	11.0	14.6	14.1	19.5	14.8	25.8	14.1	27.6	11.9	32.1	11.7	37.6	11.7	-	-	-	-
99	37	9.3	9.3	10.9	10.9	14.5	14.3	19.0	15.7	25.4	15.4	26.6	13.1	31.8	13.0	37.0	12.2	44.2	12.9	-	-
104	40	9.2	9.2	10.9	10.9	14.4	14.4	18.7	17.2	24.2	16.8	25.8	15.2	31.2	15.0	36.6	14.3	43.9	13.2	52.3	12.4
109	43	-	-	10.8	10.8	14.3	14.3	18.5	18.0	23.8	17.4	25.0	16.4	29.7	16.0	34.4	15.6	42.4	14.7	50.5	13.1
113	45	-	-	10.3	10.3	13.9	13.9	18.0	18.0	22.9	18.2	24.2	17.2	28.8	16.7	33.4	16.2	37.9	14.9	45.6	13.4
118	48	-	-	-	-	13.4	13.4	17.2	17.2	22.0	19.0	23.4	18.0	27.9	17.8	32.7	17.2	32.3	15.6	38.0	13.7

Heating

Outdoor air temperature		19°FWB	23°FWB	27°FWB	32°FWB	36°FWB	39°FWB	43°FWB	50°FWB	57°FWB
		-7°CWB	-5°CWB	-2.9°CWB	0°CWB	2°CWB	4°CWB	6°CWB	10°CWB	14°CWB
°FDB	°CDB	TC	TC	TC	TC	TC	TC	TC	TC	TC
23	-5	28.6	-	-	-	-	-	-	-	-
27	-3	28.2	28.4	-	-	-	-	-	-	-
32	0	-	26.5	26.7	-	-	-	-	-	-
37	3	-	-	25.8	26.0	27.7	-	-	-	-
45	7	-	-	-	25.1	25.3	25.0	24.4	-	-
52	11	-	-	-	-	21.7	21.9	22.1	22.5	-
59	15	-	-	-	-	-	19.4	19.6	19.8	19.6
64	18	-	-	-	-	-	-	17.4	17.6	17.9
68	20	-	-	-	-	-	-	16.0	16.2	16.4

Note)
TC: Total Capacity (kW), SHC: Sensible Heat Capacity (kW)
WB: Wet Bulb, DB: Dry Bulb

1. The data shown in the table illustrates the supported operating ranges under the following conditions:
   - Indoor and Outdoor Unit
   - Effective piping length: 7.5 m
   - Height differential: 0 m
2. The actual temperature may not match the temperature setting under some circumstances due to the outdoor-air processing load or mechanical protection controls.
3. The system will not operate in fan mode when the outdoor air temperature is -5°C or below.
4. Tropical region only.

6.2 Air flow

ARNU48GBRZ4

Setting Value	ESP (mmAq)										
	5	6	8	10	12	14	15	16	17	18	20
70	15.8	-	-	-	-	-	-	-	-	-	-
75	18.7	16	-	-	-	-	-	-	-	-	-
80	22.2	19.9	13.6	-	-	-	-	-	-	-	-
85	24.2	23.4	17.8	-	-	-	-	-	-	-	-
87	25.2	24.1	19.6	-	-	-	-	-	-	-	-
90	26.8	25.5	21.9	15.9	-	-	-	-	-	-	-
92	28.1	27	22.8	18.2	10.6	-	-	-	-	-	-
94	29	27	24	19.8	13.8	-	-	-	-	-	-
96	30.3	28.5	25	22.5	15.8	-	-	-	-	-	-
98	-	29.8	26.5	22.8	17.4	10.7	-	-	-	-	-
101	-	31.8	28	24.2	20.5	16	-	-	-	-	-
103	-	32.7	29.17	25.9	22	16.5	11.8	-	-	-	-
106	-	-	30.9	28.2	24.6	19.9	15.2	11.9	-	-	-
111	-	-	-	30.8	28.3	24.2	20.7	17.7	15.8	14.7	
116	-	-	-	-	30.7	27.6	25.2	24.2	22.4	18.8	13.4
121	-	-	-	-	-	30.4	29.7	27.2	26.3	25.6	18.7
126	-	-	-	-	-	-	-	28.6	27.6	27.4	25.9
130	-	-	-	-	-	-	-		-	-	26.5
135	-	-	-	-	-	-	-	-	-	-	-
140	-	-	-	-	-	-	-	-	-	-	-

ARNU76GB8Z4, ARNU96GB8Z4

Setting Value	ESP (mmAq)								
	6	9	12	15	18	20	22	23	25
55	25.39	-	-	-	-	-	-	-	-
60	33.65	-	-	-	-	-	-	-	-
65	40.01	30.29	-	-	-	-	-	-	-
70	46.43	35.81	17.31	-	-	-	-	-	-
75	50.93	45.35	35.57	-	-	-	-	-	-
80	55.77	51.91	42.86	26.57	-	-	-	-	-
85	-	54.22	49.74	42.67	20.9	-	-	-	-
88	-	-	52.72	46.44	33.72	-	-	-	-
90	-	-	52.54	48.82	40.09	23.07	-	-	-
92	-	-	-	50.91	44.3	23.46	-	-	-
94	-	-	-	50.9	46.73	39.65	13.87	-	-
96	-	-	-	-	49.84	44.04	24.17	23.63	-
98	-	-	-	-	49.66	48.09	39.72	25.28	14.49
100	-	-	-	-	-	48.23	42.56	40.34	15.47
102	-	-	-	-	-	-	46.41	45.92	38.6
105	-	-	-	-	-	-	-	46.51	45.44

Note) Setting Value : ESP value
The above table shows the correlation between the air rates and E.S.P.
The above table shows the available E.S.P. range.
If the E.S.P. of the installed indoor is less than the lowest value(as mention in the table), indoor components can be failed.

7. External Static Pressure (E.S.P) & Air Flow

ARNU48GBRZ4

Capacity (Btu/h)	Mode		Set value	Standard ESP(mmAq(Pa))	CMM	Lower Limit of External Static Pressure(mmAq(Pa))	Upper Limit of External Static Pressure(mmAq(Pa))
48k	High (factory set)	High	116	18	18.8	10(98)	20(196)
		Mid	110		14.7		

ARNU76GB8Z4, ARNU96GB8Z4

Capacity (Btu/h)	Mode		Set value	Standard ESP(mmAq(Pa))	CMM	Lower Limit of External Static Pressure(mmAq(Pa))	Upper Limit of External Static Pressure(mmAq(Pa))
76k	High (factory set)	High	95	22	23.7	12(118)	25(245)
		Mid	93		13.2		
96k	High (factory set)	High	97	22	35.7	12(118)	25(245)
		Mid	95		23.7		

Note) The above table shows the available E.S.P. range.

8. Electric Characteristics

Units					Power Supply		IFM		Input(W)	
Model	Type	Hz	volts	Voltage Range	MCA	MFA	kW	FLA	Cooling	Heating
ARNU48GBRZ4	BR	50	220-240	Max: 264 Min: 198	1.5	15	0.20	0.78	169	169
ARNU76GB8Z4	B8				2.7	15	0.38	1.36	230	230
ARNU96GB8Z4	B8				3.7	15	0.38	2.15	360	360
ARNU48GBRZ4	BR	60	220	Max: 242 Min: 198	1.5	15	0.20	0.78	169	169
ARNU76GB8Z4	B8				2.7	15	0.38	1.36	230	230
ARNU96GB8Z4	B8				3.7	15	0.38	2.15	360	360

Symbols:

MCA : Min, Circuit Amps(A)

MFA : Max. Fuse Amps(see note 5)

kW : Fan Motor Rated Output(kW)

FLA : Full Load Amps(A)

IFM : Indoor Fan Motor

Note :

1. Voltage range
   Units are suitable for use on electrical systems where voltage supplied to unit terminals is not below or above the listed range limits,
2. Maximum allowable voltage unbalance between phases is 2%
3. MCA/MFA
   MCA=1.25 x FLA
   MFA≤ 4 x FLA
   (Next lower standard fuse rating. Min. 15A)
4. Select wire size based on the MCA
5. Instead of fuse, use Circuit Breaker.

9. Sound Levels

9.1 Sound Pressure Levels

Overall

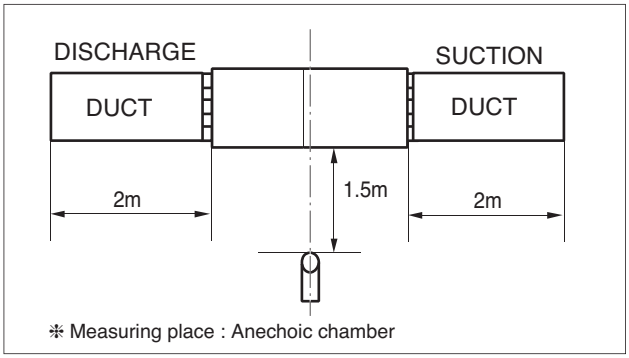

Notes:
1. Sound measured at 1.5m away from the center of the unit
2. Operating conditionl
   - Cooling : Outdoor temperature (33°C DB, 28°C WB)
   - Heating : Outdoor temperature (0°C DB, -2.9°C WB)
3. Reference accoustic pressure 0dB = 20μPa
4. Sound level will vary depending on a range of factors such as the construction(acoustic absorption coefficient) of particular room in which the equipment in installed.

[dB(A)]

Model	Sound Pressure Levels		
	H	M	L
ARNU48GBRZ4	41	40	38
ARNU76GB8Z4	45	43	43
ARNU96GB8Z4	47	45	45

ARNU48GBRZ4

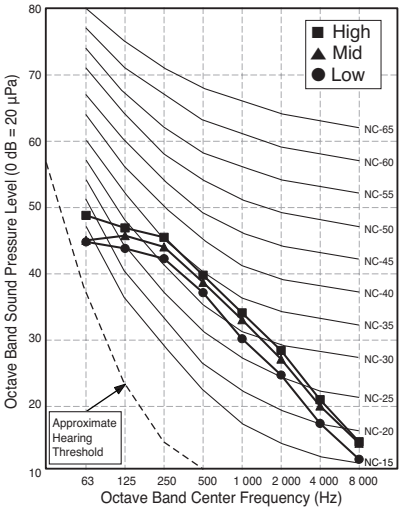

ARNU76GB8Z4

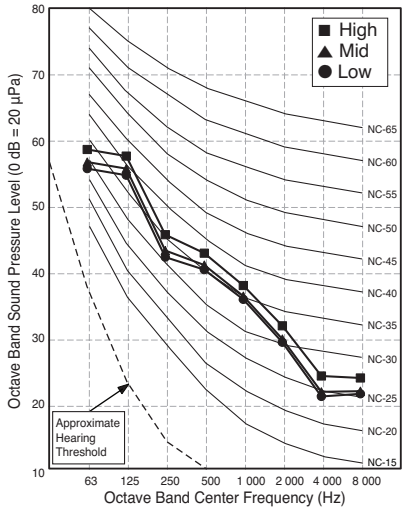

ARNU96GB8Z4

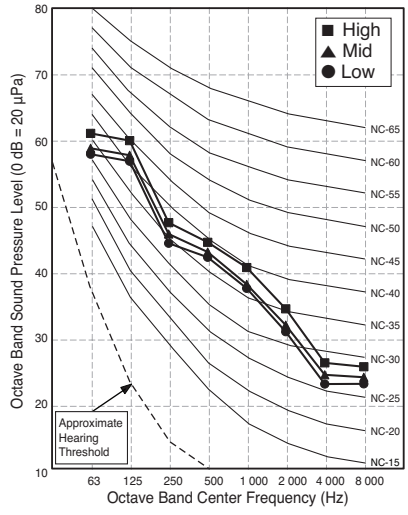

9. Sound Levels

9.2 Sound Power Levels

Model	Sound Power Levels dB(A)
	High Fan Speed
ARNU48GBRZ4	62
ARNU76GB8Z4	70
ARNU96GB8Z4	72

Notes:
- Data is valid at diffuse field condition
- Data is valid at nominal operating condition
- Sound level can be increased in static pressure mode or used air guide.
- Sound power level is measured on the rated condition in the reverberation rooms.
- Sound level will vary depending on a range of factors such as the construction (acoustic absorption coefficient) of particular room in which the equipment in installed.
- Reference acoustic intensity 0dB = 10E-6μW/m²

ARNU48GBRZ4

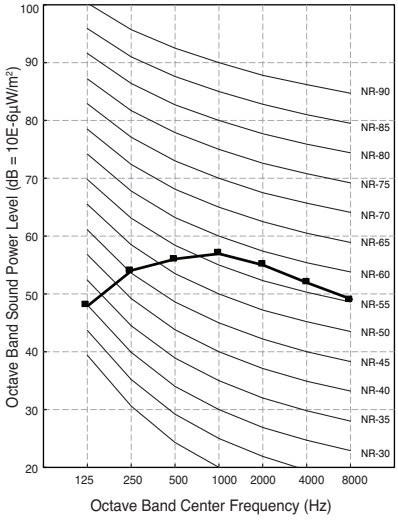

ARNU76GB8Z4

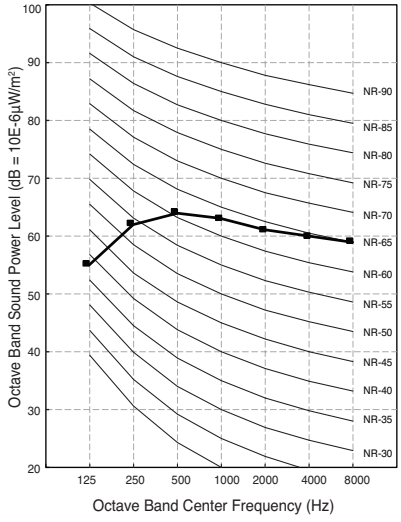

ARNU96GB8Z4

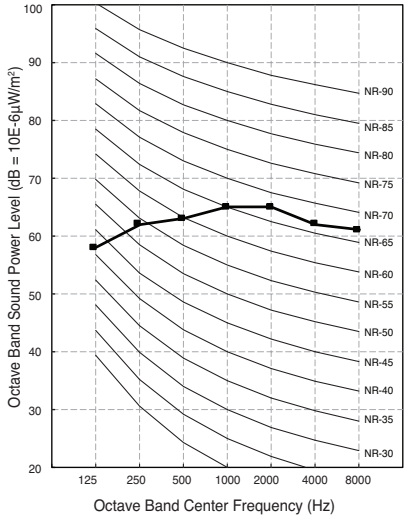

10. Operation Details

Operation range

FAU will operate in the below range. Hot outdoor temperature (over 43°C) or cold outdoor temperature (under -5°C) will make customer feel uncomfortable because FAU outlet discharge temperature might be not enough controlled in that region.

* FAU : Fresh Air Intake Unit

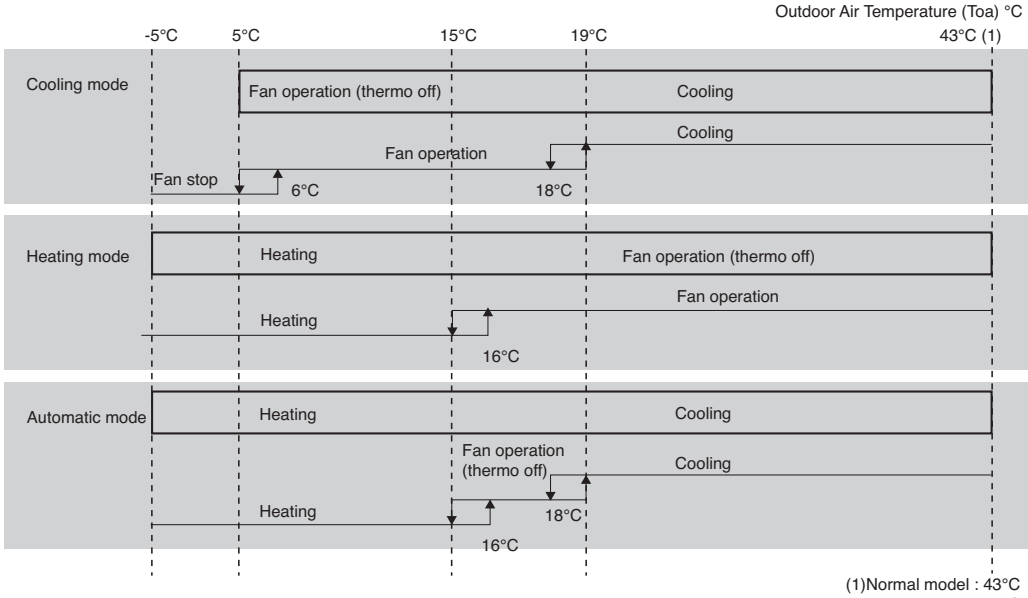

(1)Normal model : 43°C
Tropical model : 48°C

Usage Limitations

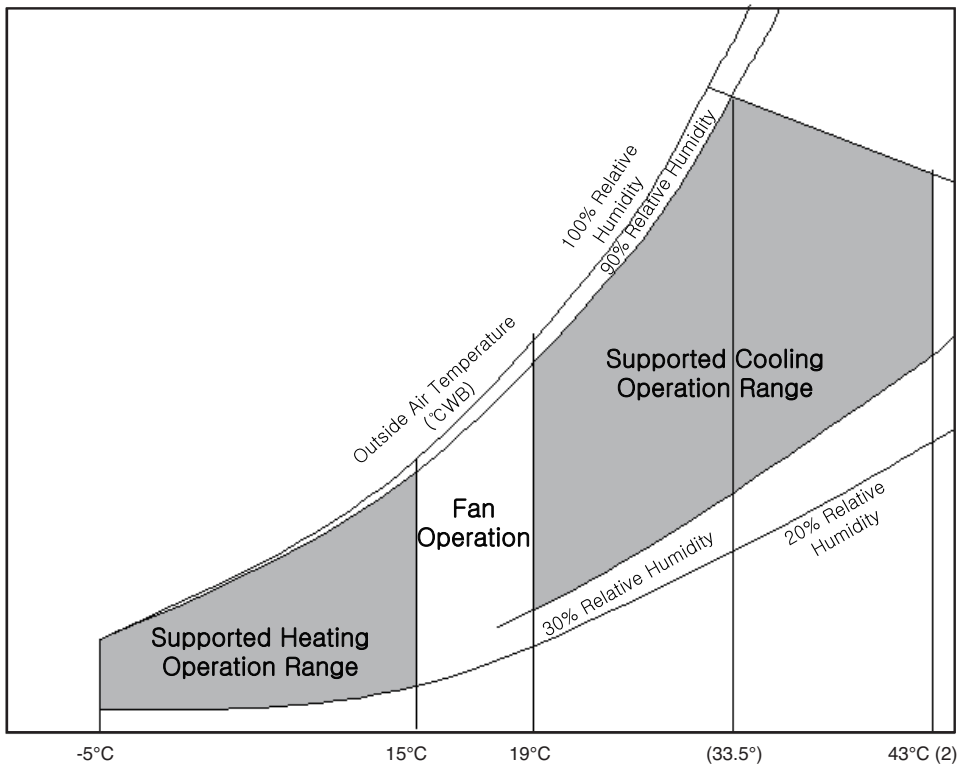

(2)Normal model : 43°C
Tropical model : 48°C

11. Installation

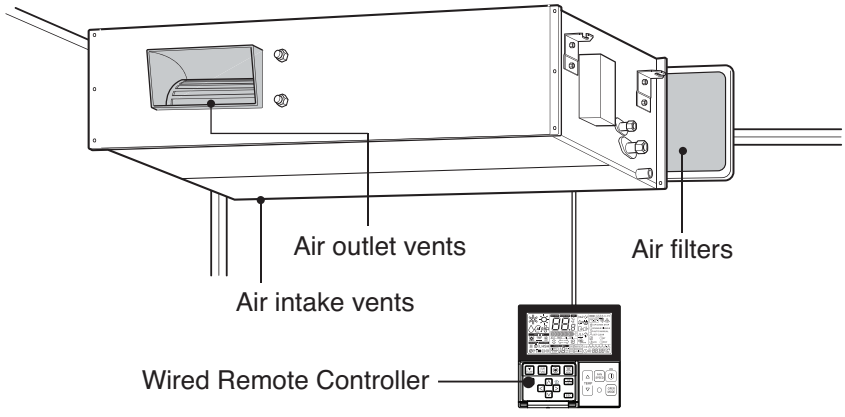

Standard Accessories

Name	Drain hose	Clamp metal	Washer for hanging backet	Clamp (Tie Wrap)	Insulation for fitting	Others
Quantity	1 EA	2 EA	8 EA	4 EA	1 SET	
Shape				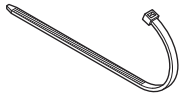	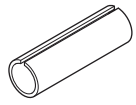 for gas pipe 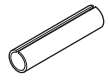 for liquid pipe	• Owner's manual • Installation manual

11. Installation

11.1 Installation Limit

Read completely, then follow step by step.

1. Fresh Air Intake Unit Combination

No	Connection Condition	Combination
1	Only Fresh Air Intake Unit installation	1) The total capacity of Fresh Air Intake Unit should be 50~100% of outdoor unit. 2) The max quantity of Fresh Air Intake unit is 4 Units.
2	Mixture Installation with standard indoor units and Fresh Intake Units	1) The total capacity of indoor units (standard Indoor Unit + Fresh Air Intake Unit) should be 50~100% of outdoor unit. 2) The total capacity of Fresh Air Intake Units should be less than 30% the total capacity of indoor units.

⚠CAUTION

Failure to comply with the above connection conditions for installation, it can cause cooling & heating capacity down.

2. Connection of the Outdoor Unit

It is possible to connect Heat Pump Models.
It is not possible to connect Heat Recovery Models.

<Only Fresh Air Intake Unit install>
Outdoor : 10HP

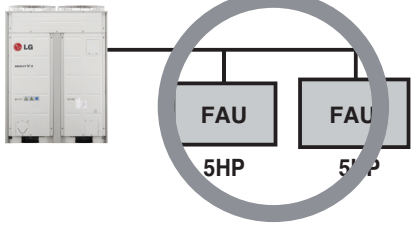

<Mixture Install>
Outdoor : 20HP

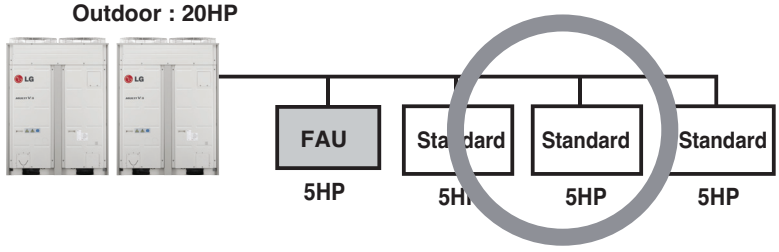

<Wrong Install>
Outdoor : 20HP

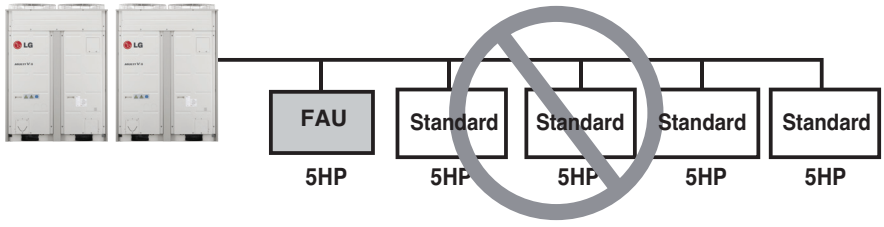

* FAU : Fresh Air Intake Unit
Standard: Standard Indoor Unit

▶ The total capacity of indoor units exceed 100% of outdoor unit

3. Installation of intake air duct

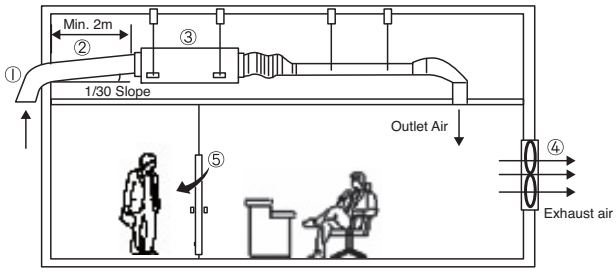

①: Inlet Hood
②: Intake Air Duct
③: Fresh Air Intake Unit
④: Exhaust Fan
⑤: Door

① **Inlet Hood**
Inlet Hood should be installed such that no water enter inside the unit

② **Intake Air Duct**
The Intake Air Duct must have down-slope about 1/30.
The length of Intake Air Duct should be longer than 2m.

③ **Fresh Air Intake Unit**
If wired remote controller is not connected, it will display strange value to the room temperature

④ **Exhaust Fan**
Fresh Air Intake Unit will make room the positive pressure.
Exhaust fan should be installed to maintain the room pressure.

⑤ **Door**
It would be possible to raise in the room air pressure because of Fresh Air Intake Unit.
In that case, the door could hurt someone in front of door.
So be careful of the positive pressure to design the door.

4. The Control System

1) In case of connecting with Standard indoor units, Standard indoor unit should be a master unit.

Separate Fresh Air Intake Unit with Standard indoor units
Set only one Standard indoor units to Master,

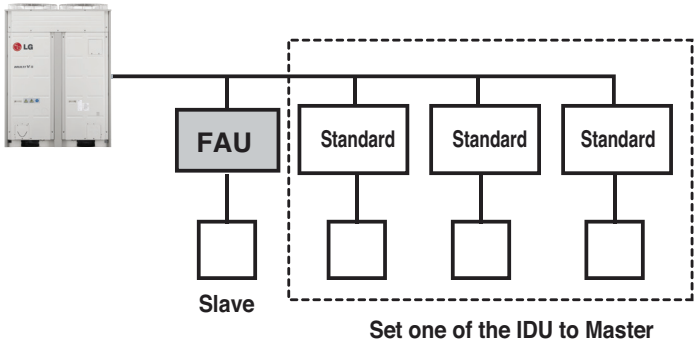

* FAU : Fresh Air Intake Unit
Standard: Standard Indoor Unit

2) In case of using central remote controller, mixture of indoor units and Fresh Air Intake Unit in same zone is not possible.

Separate Fresh Air Intake Unit zone with Standard indoor units zone.

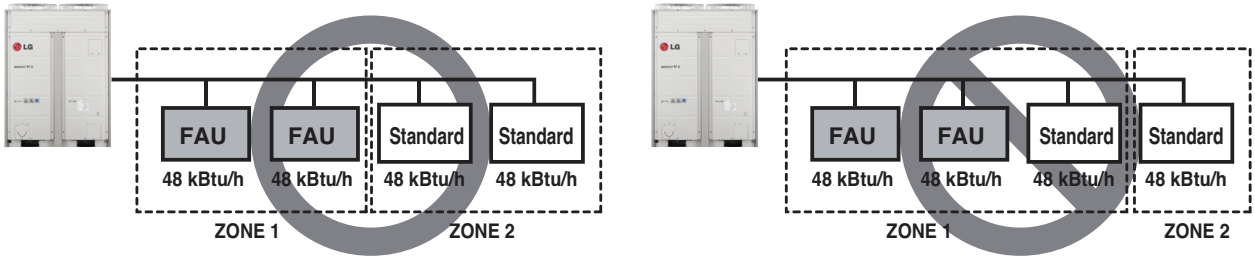

5. Cycle check and SVC

For Fresh Intake Unit cycle check and SVC, LG MV 5.8 or later version should be used.

11.2 Selection of the best location

Install the air conditioner in the location that satisfies the following conditions.

- The place shall easily bear a load exceeding four times the indoor unit's weight.
- The place shall be able to inspect the unit as the figure.
- The place where the unit shall be leveled.
- The place shall allow easy water drainage.(Suitable dimension "H" is necessary to get a slope to drain as figure.)
- The place shall easily connect with the outdoor unit.
- The place where the unit is not affected by an electrical noise.
- The place where air circulation in the room will be good .
- There should not be any heat source or steam near the unit.

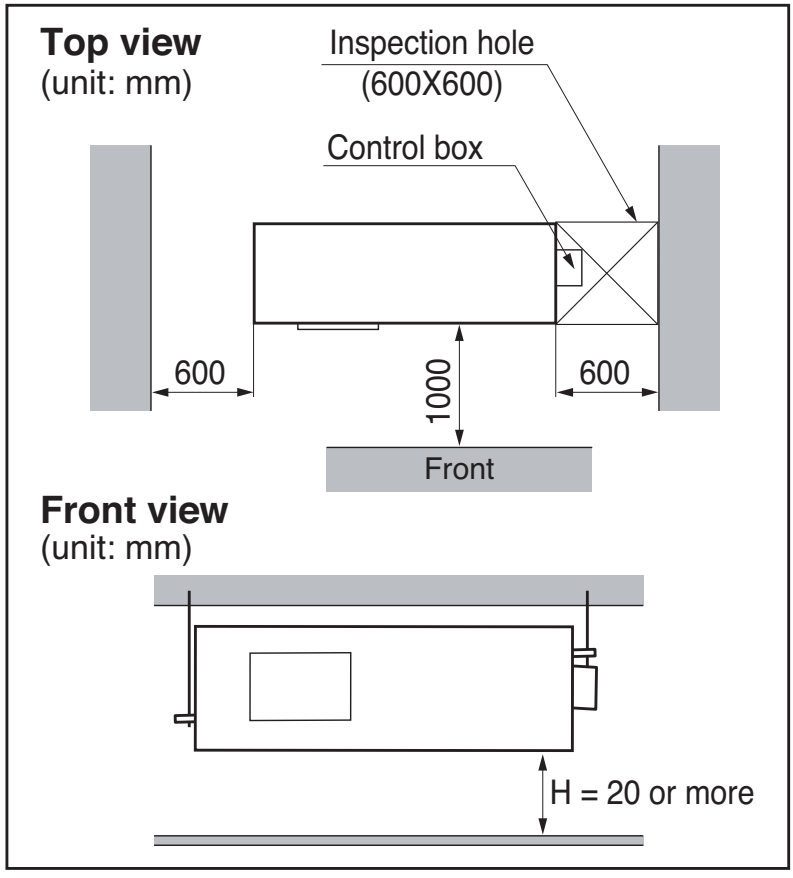

CAUTION : In case that the unit is installed near the sea, the installation parts may be corroded by salt, The installation parts (and the unit) should be taken appropriate anti-corrosion measures.

11.3 Ceiling dimension and hanging bolt location

■ **Installation of Unit**

Install the unit above the ceiling correctly.

CASE 1

POSITION OF SUSPENSION BOLT

- Apply a joint-canvas between the unit and duct to absorb unnecessary vibration.

(Unit:mm)

Dimension / Capacity(Btu/h)	A	B	C	D	E	F	(G)	H	I
BR Chassis (48k)	1282	1230	477	56	590	30	120	1006	294

(Unit:mm)

Dimension / Capacity(Btu/h)	A	B	C	D	E	F	G	H	I	J	K	L
B8 Chassis (76/96k)	1622	1565	580	292	695	1400	460	1122	1680	390	445	15

CASE 2

- Install the unit leaning to a drainage hole side as a figure for easy water drainage.

POSITION OF CONSOLE BOLT

- A place where the unit will be leveled and that can support the weight of the unit.
- A place where the unit can withstand its vibration.
- A place where service can be easily performed.

BR Chassis (48k)

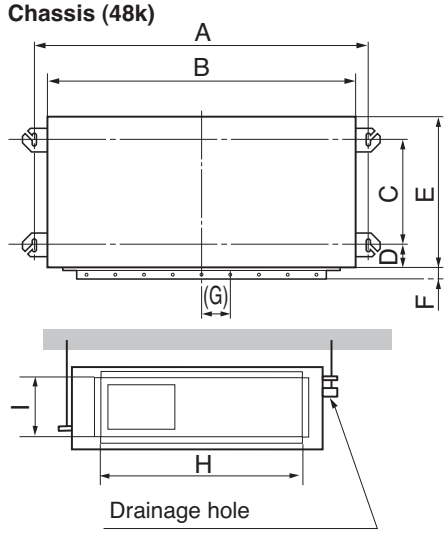

B8 Chassis (76/96k)

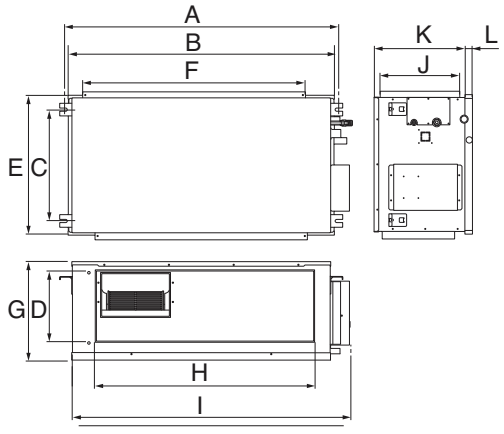

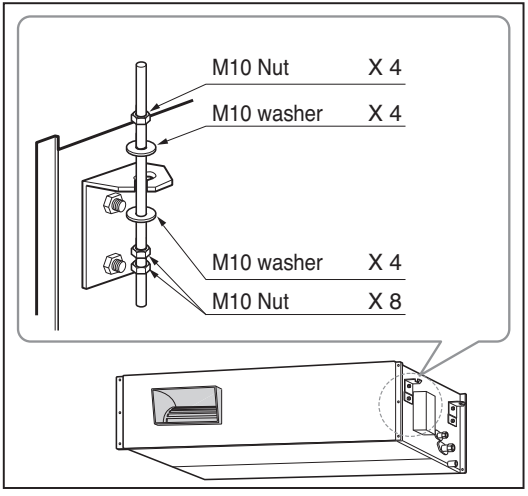

11. Installation

NOTICE

• Throughly study the following installation locations:

1. In such places as restaurants and kitchens, considerable amount of oil steam and flour adhere to the fan, the fin of the heat exchanger, resulting in heat exchange reduction, spraying, dispersing of water drops, etc. In these cases, take the following actions:

• Make sure that the ventilation fan for smoke-collecting hood on a cooking table has sufficient capacity so that it draws oily steam which should not flow into the suction of the air conditioner.

• Make enough distance from a cooking room to install the air conditioner in such a place where it may not suck in oil steam.

2. Avoid installing air conditioner in such circumstances where cutting oil mist or iron powder is in suspension in factories, etc.
3. Avoid places where inflammable gas is generated, flows in, is stored or vented.
4. Avoid places where sulfurous acid gas or corrosive gas is generated.
5. Avoid places near high frequency generators.

11.4 Indoor Unit Installation

• Select and mark the position for fixing bolts.
• Drill the hole for set anchor on the face of ceiling.

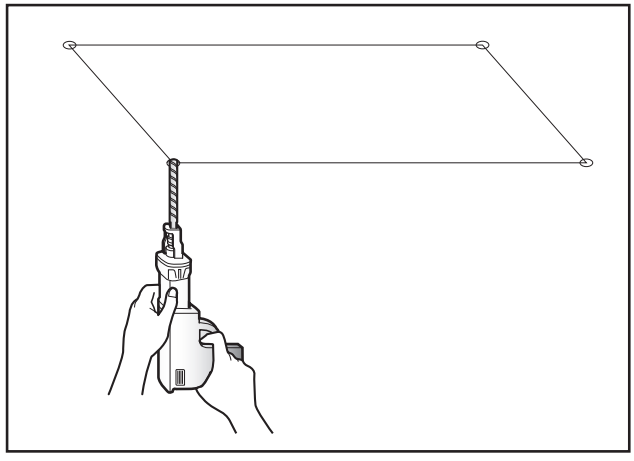

CAUTION : Tighten the nut and bolt to prevent unit falling.

• Insert the set anchor and washer onto the suspension bolts for locking the suspension bolts on the ceiling.
• Mount the suspension bolts to the set anchor firmly.
• Secure the installation plates onto the suspension bolts (adjust level roughly) using nuts, washers and spring washers.

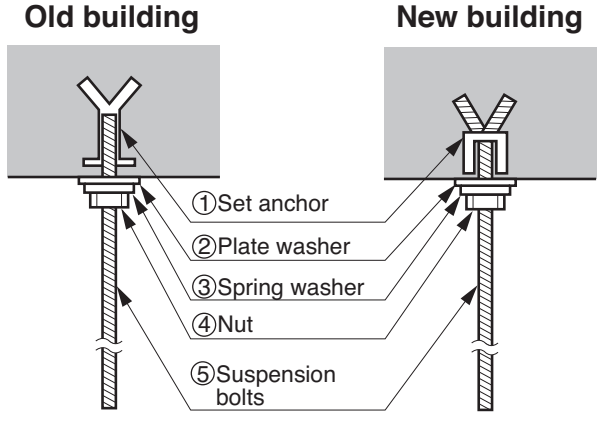

11.5 Wiring Connection

Connect the wires to the terminals on the control board individually according to the outdoor unit connection.
• Ensure that the color of the wires of outdoor unit and the terminal No. are the same as those of indoor unit respectively.

BR(Chasiss)48K

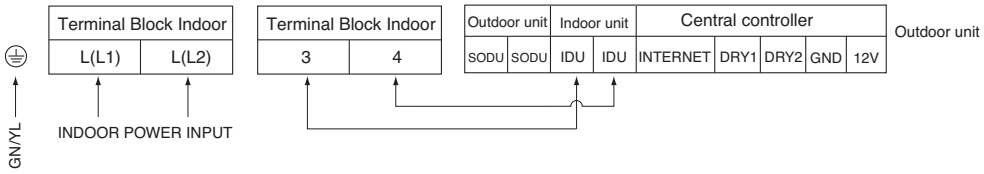

B8(Chasiss)96K

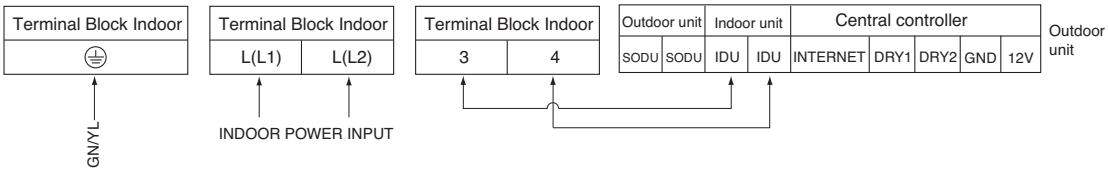

WARNING : Make sure that the screws of the terminal are free from looseness.

Clamping of cables

1) Arrange 2 power cables on the control panel.
2) First, fasten the steel clamp with a screw to the inner boss of control panel.
3) For the cooling model, fix the other side of the clamp with a screw strongly. For the heat pump model, put the 0.75mm^2 cable(thinner cable) on the clamp and tighten it with a plastic clamp to the other boss of the control panel.

INSULATION, OTHERS | Insulate the joint and tubes completely.

THERMAL INSULATION All thermal insulation must comply with local requirement.

INDOOR UNIT

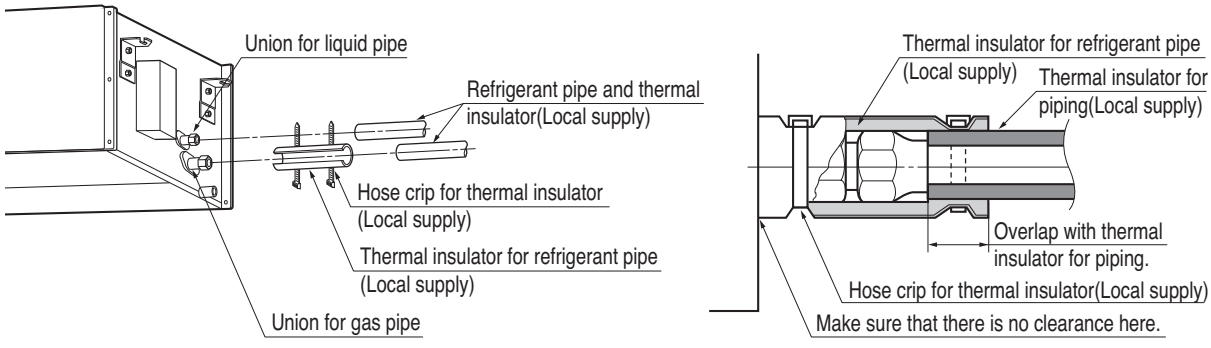

11.6 Check the Drainage

1. Remove the Air Filter.

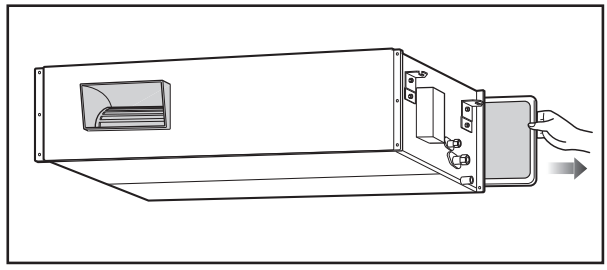

2. Check the drainage.

- Spray one or two glasses of water upon the evaporator.
- Ensure that water flows drain hose of indoor unit without any leakage.

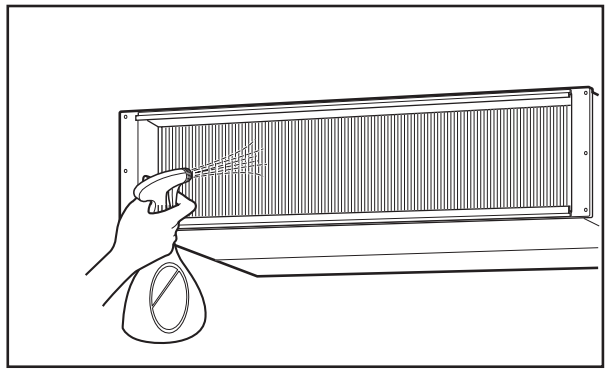

CAUTION

1. **Install declination** of the indoor unit is very **important for the drain** of the duct type air conditioner.
2. Minimum thickness of the insulation for the connecting pipe shall be 5mm.

Front of view

- The unit must be horizontal or declined to the drain hose connected when finished installation.

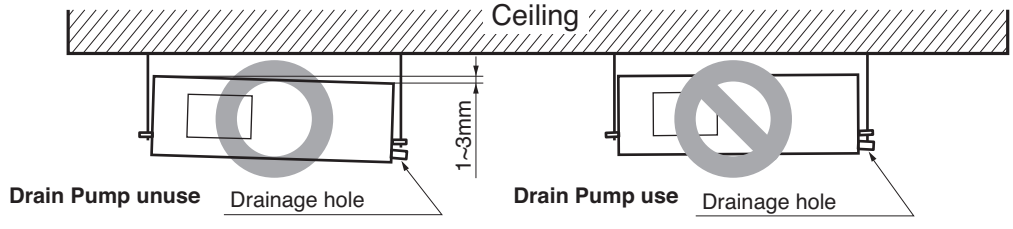

11.7 Indoor Unit Drain Piping

- Drain piping must have down-slope (1/50 to 1/100): be sure not to provide up-and-down slope to prevent reversal flow.
- During drain piping connection, be careful not to exert extra force on the drain port on the indoor unit.
- The outside diameter of the drain connection on the indoor unit is 32mm.

Piping material: Polyvinyl chloride pipe inner diameter Ø 25mm and pipe fittings

- Be sure to install heat insulation on the drain piping.

Heat insulation material: Polyethylene foam with thickness more than 8 mm.

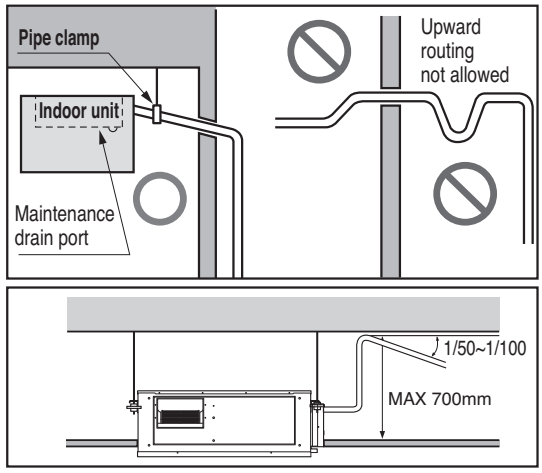

Drain test

The air conditioner uses a drain pump to drain water.
Use the following procedure to test the drain pump operation:

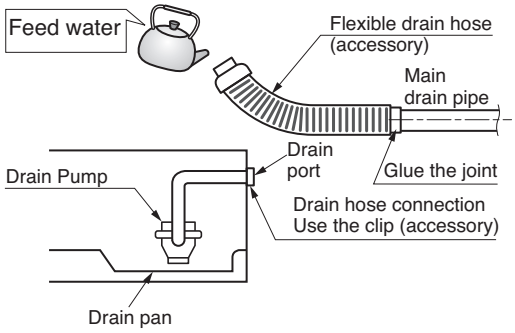

- Connect the main drain pipe to the exterior and leave it provisionally until the test comes to an end.
- Feed water to the flexible drain hose and check the piping for leakage.
- Be sure to check the drain pump for normal operation and noise when electrical wiring is complete.
- When the test is complete, connect the flexible drain hose to the drain port on the indoor unit.

⚠ CAUTION

The supplied flexible drain hose should not be strained.
A strained hose may cause leakage of water.

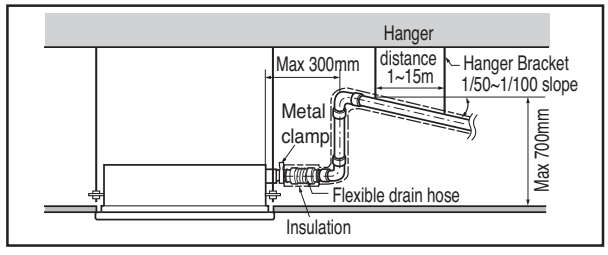

11. Installation

CAUTION:
After the confirmation of the above conditions, prepare the wiring as follows:

1) Never fail to have an individual power specialized for the air conditioner. As for the method of wiring, be guided by the circuit diagram posted on the inside of control box cover.
2) Provide a circuit breaker switch between power source and the unit.
3) The screws which fasten the wiring in the casing of electrical fittings are liable to come loose from vibrations to which the unit is subjected during the course of transportation. Check them and make sure that they are all tightly fastened. (If they are loose, it could give rise to burn-out of the wires.)
4) Specification of power source
5) Confirm that electrical capacity is sufficient.
6) Be sure that the starting voltage is maintained at more than 90 percent of the rated voltage marked on the name plate.
7) Confirm that the cable thickness is as specified in the power sources specification. (Particularly note the relation between cable length and thickness.)
8) Never fail to equip a leakage breaker where it is wet or moist.
9) The following troubles would be caused by voltage drop-down.
- Vibration of a magnetic switch, damage on the contact point, fuse breaking, disturbance by the normal function of an overload protection device.
- Proper starting power is not given to the compressor.

HAND OVER

Teach the customer the operation and maintenance procedures, using the operation manual.
(air filter cleaning, temperature control, etc.)

12. Accessories

Standard Accessories

Name	Drain hose	Clamp metal	Washer for hanging backet	Clamp (Tie Wrap)	Insulation for fitting	(Other)
Quantity	1 EA	2 EA	8 EA	4 EA	1 SET	
Shape				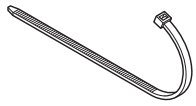	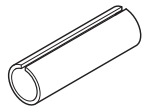 for gas pipe 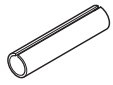 for liquid pipe	• Owner's manual • Installation manual

⚠ CAUTION

• Use only those accessories (Standard or optional) which have designated specifications.

MULTI V™ Indoor unit

Wall Mounted Unit (Standard)

1. List of functions
2. Specifications
3. Dimensions
4. Piping Diagrams
5. Wiring Diagrams
6. Capacity Tables
7. Air Velocity and Temperature Distribution
8. Electric Characteristics
9. Sound Levels
10. Installation
11. Accessories

1. List of functions

Category	Function	ARNU05GSB*4, ARNU07GSB*4, ARNU09GSB*4 ARNU12GSB*4, ARNU15GSB*4, ARNU18GSC*4 ARNU24GSC*4, ARNU30GSVA4, ARNU36GSVA4
Air flow	Air supply outlet	1
	Airflow direction control(left & right)	Manual
	Airflow direction control(up & down)	Auto
	Auto swing(left & right)	-
	Auto swing(up & down)	Auto
	Airflow steps(fan/cool/heat)	3/4/3
	Chaos swing	O
	Chaos wind(auto wind)	-
	Jet cool(Power wind)	-
	Swirl wind	-
Air purifying	Deodorizing filter	O
	Plasma air purifier	O(L4 Model only), X(A4 Model)
	Prefilter(washable / anti-fungus)	O
Installation	Drain pump	-
	E.S.P. control	-
	Electric heater(operation)	-
	High ceiling operation	-
Reliability	Hot start	O
	Self diagnosis	O
	Soft dry operation	O
Convenience	Auto changeover	O(Heat recovery)
	Auto cleaning	O
	Auto operation(artificial intelligence)	O(Heat pump or Cooling only)
	Auto restart operation	-
	Child lock	O
	Forced operation	O
	Group control	O
	Sleep mode	O
	Timer(on/off)	O
	Timer(weekly)	O
	Two thermistor control	O
	External On/Off	O
Individual control	Wide wired remote controller (RS2)	PQRCVSL0/PQRCVSL0QW
	Wide wired remote controller (RS2 Plus)	PREMTB001/PREMTBB01
	Premium wired remote controller	PREMTA000/PREMTA000A/PREMTA000B
	Simple wired remote controller	PQRCVCL0Q(W)
	Wired remote controller(for hotel use)	PQRCHCA0Q(W)
	Wireless LCD remote control	PQWRH(C)Q0FDB
Special function kit	Zone control	-
	CTIE	-
	Electro thermostat	-
	Remote temperature sensor	-
	Group control wire	PZCWRCG3
	Dry contact	PDRYCB000/PDRYCB100/PDRYCB300/PDRYCB400/PDRYCB500

O : Applied X : Not applied – : No relation

Option : Model name & price are different according to options, and assembled in factory with main unit.

Accessory : Installed at field, ordered and purchased separately by the corresponding model name, supplied with separate package.

2. Specifications

* Model Name
A:Basic, L:Plasma

Type			Wall Mounted		
Model		Unit	ARNU05GSB*4	ARNU07GSB*4	ARNU09GSB*4
Cooling Capacity		kW	1.6	2.2	2.8
		kcal/h	1,400	1,900	2,400
		Btu/h	5,500	7,500	9,600
Heating Capacity		kW	1.8	2.5	3.2
		kcal/h	1,500	2,200	2,800
		Btu/h	6,100	8,500	10,900
Dimensions(WxHxD)	Body	mm	895 x 289 x 215	895 x 289 x 215	895 x 289 x 215
		inch	35-1/4 x 11-3/8 x 8-15/32	35-1/4 x 11-3/8 x 8-15/32	35-1/4 x 11-3/8 x 8-15/32
Coil	Rows x Columns x FPI		2 x 16 x 23	2 x 16 x 23	2 x 16 x 23
	Face Area	m^2	0.16	0.21	0.21
Fan	Type		Cross Flow Fan	Cross Flow Fan	Cross Flow Fan
	Motor Output x Number	W	20 x 1	20 x 1	20 x 1
	Running Current	A	0.16	0.16	0.16
	Air Flow Rate(H / M / L)	CMM	6.5 / 6.0 / 5.5	7.0 / 6.5 / 5.5	8.2 / 7.0 / 5.5
		CFM	230 / 212 / 194	247 / 230 / 194	290 / 247 / 194
	Drive		Direct	Direct	Direct
	Motor type		BLDC	BLDC	BLDC
Temperature Control			Microprocessor, Thermostat for cooling and heating	Microprocessor, Thermostat for cooling and heating	Microprocessor, Thermostat for cooling and heating
Sound Absorbing Thermal Insulation Material			Foamed polystrene	Foamed polystrene	Foamed polystrene
Air Filter			Resin Net(washable)	Resin Net(washable)	Resin Net(washable)
Safety Device			Fuse	Fuse	Fuse
Pipe Connections	Liquid Side	mm(inch)	Ø 6.35(1/4)	Ø6.35(1/4)	Ø6.35(1/4)
	Gas Side	mm(inch)	Ø 12.7(1/2)	Ø12.7(1/2)	Ø12.7(1/2)
	Drain Pipe(ID)	mm	16(5/8)	16 (5/8)	16 (5/8)
Net Weight		kg(lbs)	10.0 (22.0)	10.0 (22.0)	10.0 (22.0)
Noise Level(Sound Press, 1m, H / M / L)		dB(A)	30 / 29 / 28	32 / 30 / 28	34 / 32 / 28
Power Supply		Ø, V, Hz	1, 220-240, 50	1, 220-240, 50	1, 220-240, 50
			1, 220, 60	1, 220, 60	1, 220, 60
Refrigerant Control			EEV	EEV	EEV
Transmission cable		mm^2	1.0 ~ 1.5 x 2C	1.0 ~ 1.5 x 2C	1.0 ~ 1.5 x 2C
Color			White	White	White

Notes:

1. Capacities are based on the following conditions:
   - Cooling
     - Indoor temp. 27°C[80.6°F]DB/ 19°C[66.2°F]WB
     - Outdoor temp. 35°C[95°F]DB/ 24°C[75.2°F]WB
     - Interconnecting Piping Length 7.5m
     - Level Difference of Zero
   - Heating
     - Indoor temp. 20°C[68°F]DB/ 15°C[59°F]WB
     - Outdoor temp. 7°C[44.6°F]DB/ 6°C[42.8°F]WB
     - Interconnecting Piping Length 7.5m
     - Level Difference of Zero
2. Capacities are Net Capacities
3. Due to our policy of innovation some specifications may be changed without prior notification
4. Wiring cable size must comply with the applicable local and national codes. And “Electric characteristics” chapter should be considered for electrical work and design. Especially the power cable and circuit breaker should be selected in accordance with that.
5. EEV: Electronic Expansion Valve
6. Anechoic chamber conversion value is measured at 1.5 m downward from unit centre.
   The values depends on the ambient conditions and values are normally higher in actual operation.

Conversion Formula
kcal/h= kW x 860
Btu/h = kW x 3412
cfm = m^3/min x 35.3
l/s = CMM x 1000/60

2. Specifications

* Model Name
A:Basic, L:Plasma

Type			Wall Mounted	
Model		Unit	ARNU12GSB*4	ARNU15GSB*4
Cooling Capacity		kW	3.6	4.5
		kcal/h	3,100	3,900
		Btu/h	12,300	15,400
Heating Capacity		kW	4.0	5.0
		kcal/h	3,400	4,300
		Btu/h	13,600	17,100
Dimensions(WxHxD)	Body	mm	895 x 289 x 215	895 x 289 x 215
		inch	35-1/4 x 11-3/8 x 8-15/32	35-1/4 x 11-3/8 x 8-15/32
Coil	Rows x Columns x FPI		2 x 16 x 23	2 x 16 x 23
	Face Area	m^2	0.21	0.21
Fan	Type		Cross Flow Fan	Cross Flow Fan
	Motor Output x Number	W	20 x 1	20 x 1
	Running Current	A	0.16	0.16
	Air Flow Rate(H / M / L)	CMM	9.5 / 8.2 / 6.5	10.5 / 9.0 / 7.0
		CFM	336 / 290 / 230	371 / 318 / 247
	Drive		Direct	Direct
	Motor type		BLDC	BLDC
Temperature Control			Microprocessor, Thermostat for cooling and heating	Microprocessor, Thermostat for cooling and heating
Sound Absorbing Thermal Insulation Material			Foamed polystrene	Foamed polystrene
Air Filter			Resin Net(washable)	Resin Net(washable)
Safety Device			Fuse	Fuse
Pipe Connections	Liquid Side	mm(inch)	Ø6.35(1/4)	Ø6.35(1/4)
	Gas Side	mm(inch)	Ø12.7(1/2)	Ø12.7(1/2)
	Drain Pipe(ID)	mm	16 (5/8)	16 (5/8)
Net Weight		kg(lbs)	10.0 (22.0)	10.0 (22.0)
Noise Level(Sound Press, 1m, H / M / L)		dB(A)	37 / 34 / 30	42 / 39 / 32
Power Supply		Ø, V, Hz	1, 220-240, 50	1, 220-240, 50
			1, 220, 60	1, 220, 60
Refrigerant Control			EEV	EEV
Transmission cable		mm^2	1.0 ~ 1.5 x 2C	1.0 ~ 1.5 x 2C
Color			White	White

Notes:

1. Capacities are based on the following conditions:
   - Cooling
     - Indoor temp. 27°C[80.6°F]DB/ 19°C[66.2°F]WB
     - Outdoor temp. 35°C[95°F]DB/ 24°C[75.2°F]WB
     - Interconnecting Piping Length 7.5m
     - Level Difference of Zero
   - Heating
     - Indoor temp. 20°C[68°F]DB/ 15°C[59°F]WB
     - Outdoor temp. 7°C[44.6°F]DB/ 6°C[42.8°F]WB
     - Interconnecting Piping Length 7.5m
     - Level Difference of Zero
2. Capacities are Net Capacities
3. Due to our policy of innovation some specifications may be changed without prior notification
4. Wiring cable size must comply with the applicable local and national codes. And “Electric characteristics” chapter should be considered for electrical work and design. Especially the power cable and circuit breaker should be selected in accordance with that.
5. EEV: Electronic Expansion Valve
6. Anechoic chamber conversion value is measured at 1.5 m downward from unit centre.
   The values depends on the ambient conditions and values are normally higher in actual operation.

Conversion Formula
kcal/h= kW x 860
Btu/h = kW x 3412
cfm = m^3/min x 35.3
l/s = CMM x 1000/60

2. Specifications

* Model Name
A:Basic, L:Plasma

Type			Wall Mounted	
Model		Unit	ARNU18GSC*4	ARNU24GSC*4
Cooling Capacity		kW	5.6	7.1
		kcal/h	4,800	6,100
		Btu/h	19,100	24,200
Heating Capacity		kW	6.3	8.0
		kcal/h	5,400	6,900
		Btu/h	21,500	27,300
Dimensions(WxHxD)	Body	mm	1,030 x 325 x 255	1,030 x 325 x 255
		inch	40-9/16 x 12-25/32 x 10-1/32	40-9/16 x 12-25/32 x 10-1/32
Coil	Rows x Columns x FPI		2 x 18 x 22 + 1 x 4 x 21	2 x 18 x 22 + 1 x 4 x 21
	Face Area	m^2	0.28	0.28
Fan	Type		Cross Flow Fan	Cross Flow Fan
	Motor Output x Number	W	76 x 1	76 x 1
	Running Current	A	0.29	0.29
	Air Flow Rate(H / M / L)	CMM	12.5 / 12.0 / 11.3	14.0 / 12.7 / 11.5
		CFM	441 / 424 / 399	494 / 449 / 406
	Drive		Direct	Direct
	Motor type		BLDC	BLDC
Temperature Control			Microprocessor, Thermostat for cooling and heating	Microprocessor, Thermostat for cooling and heating
Sound Absorbing Thermal Insulation Material			Foamed polystrene	Foamed polystrene
Air Filter			Resin Net(washable)	Resin Net(washable)
Safety Device			Fuse	Fuse
Pipe Connections	Liquid Side	mm(inch)	Ø6.35(1/4)	Ø9.52(3/8)
	Gas Side	mm(inch)	Ø12.7(1/2)	Ø15.88(5/8)
	Drain Pipe(ID)	mm	16 (5/8)	16 (5/8)
Net Weight		kg(lbs)	14.0 (30.9)	14.0 (30.9)
Noise Level(Sound Press, 1m, H / M / L)		dB(A)	38 / 35 / 33	43 / 39 / 35
Power Supply		Ø, V, Hz	1, 220-240, 50	1, 220-240, 50
			1, 220, 60	1, 220, 60
Refrigerant Control			EEV	EEV
Transmission cable		mm^2	1.0 ~ 1.5 x 2C	1.0 ~ 1.5 x 2C
Color			White	White

Notes:

1. Capacities are based on the following conditions:
   - Cooling
     - Indoor temp. 27°C[80.6°F]DB/ 19°C[66.2°F]WB
     - Outdoor temp. 35°C[95°F]DB/ 24°C[75.2°F]WB
     - Interconnecting Piping Length 7.5m
     - Level Difference of Zero
   - Heating
     - Indoor temp. 20°C[68°F]DB/ 15°C[59°F]WB
     - Outdoor temp. 7°C[44.6°F]DB/ 6°C[42.8°F]WB
     - Interconnecting Piping Length 7.5m
     - Level Difference of Zero
2. Capacities are Net Capacities
3. Due to our policy of innovation some specifications may be changed without prior notification
4. Wiring cable size must comply with the applicable local and national codes. And “Electric characteristics” chapter should be considered for electrical work and design. Especially the power cable and circuit breaker should be selected in accordance with that.
5. EEV: Electronic Expansion Valve
6. Anechoic chamber conversion value is measured at 1.5 m downward from unit centre.
   The values depends on the ambient conditions and values are normally higher in actual operation.

Conversion Formula
kcal/h= kW x 860
Btu/h = kW x 3412
cfm = m^3/min x 35.3
l/s = CMM x 1000/60

2. Specifications

Type			Wall Mounted	
Model		Unit	ARNU30GSVA4	ARNU36GSVA4
Cooling Capacity		kW	8.8	10.4
		kcal/h	7,500	9,000
		Btu/h	30,000	35,500
Heating Capacity		kW	9.4	10.8
		kcal/h	8,100	9,300
		Btu/h	32,000	37,000
Dimensions(WxHxD)	Body	mm	1,190 x 346 x 265	1,190 x 346 x 265
		inch	46-27/32 x 13-5/8 x 10-7/16	46-27/32 x 13-5/8 x 10-7/16
Coil	Rows x Columns x FPI		2 x 18 x 19 + 1 x 6 x 19	2 x 18 x 19 + 1 x 6 x 19
	Face Area	m^2	0.34	0.34
Fan	Type		Cross Flow Fan	Cross Flow Fan
	Motor Output x Number	W	113 x 1	113 x 1
	Running Current	A	0.51	0.81
	Air Flow Rate(H / M / L)	CMM	23.0 / 20.0 / 17.0	26.0 / 23.0 / 19.0
		CFM	812 / 706 / 600	918 / 812 / 671
	Drive		Direct	Direct
	Motor type		BLDC	BLDC
Temperature Control			Microprocessor, Thermostat for cooling and heating	Microprocessor, Thermostat for cooling and heating
Sound Absorbing Thermal Insulation Material			Foamed polystrene	Foamed polystrene
Air Filter			Resin Net(washable)	Resin Net(washable)
Safety Device			Fuse	Fuse
Pipe Connections	Liquid Side	mm(inch)	Ø9.52 (3/8)	Ø9.52 (3/8)
	Gas Side	mm(inch)	Ø15.88 (5/8)	Ø15.88 (5/8)
	Drain Pipe(ID)	mm	16 (5/8)	16 (5/8)
Net Weight		kg(lbs)	16.6 (35.6)	16.6 (35.6)
Noise Level(Sound Press, 1m, H / M / L)		dB(A)	49 / 44 / 42	52 / 47 / 43
Power Supply		Ø, V, Hz	1, 220 ~ 240, 50	1, 220 ~ 240, 50
			1, 220, 60	1, 220, 60
Refrigerant Control			EEV	EEV
Transmission cable		mm^2	1.0 ~ 1.5 x 2C	1.0 ~ 1.5 x 2C
Color			White	White

Notes:

1. Capacities are based on the following conditions:
   - Cooling
     - Indoor temp. 27°C[80.6°F]DB/ 19°C[66.2°F]WB
     - Outdoor temp. 35°C[95°F]DB/ 24°C[75.2°F]WB
     - Interconnecting Piping Length 7.5m
     - Level Difference of Zero
   - Heating
     - Indoor temp. 20°C[68°F]DB/ 15°C[59°F]WB
     - Outdoor temp. 7°C[44.6°F]DB/ 6°C[42.8°F]WB
     - Interconnecting Piping Length 7.5m
     - Level Difference of Zero
2. Capacities are Net Capacities
3. Due to our policy of innovation some specifications may be changed without prior notification
4. Wiring cable size must comply with the applicable local and national codes. And “Electric characteristics” chapter should be considered for electrical work and design. Especially the power cable and circuit breaker should be selected in accordance with that.
5. EEV: Electronic Expansion Valve
6. Anechoic chamber conversion value is measured at 1.5 m downward from unit centre.
   The values depends on the ambient conditions and values are normally higher in actual operation.

Conversion Formula
kcal/h= kW x 860
Btu/h = kW x 3412
cfm = m^3/min x 35.3
l/s = CMM x 1000/60

Wall Mounted

ARNU05GSB*4 ARNU12GSB*4
ARNU07GSB*4 ARNU15GSB*4
ARNU09GSB*4

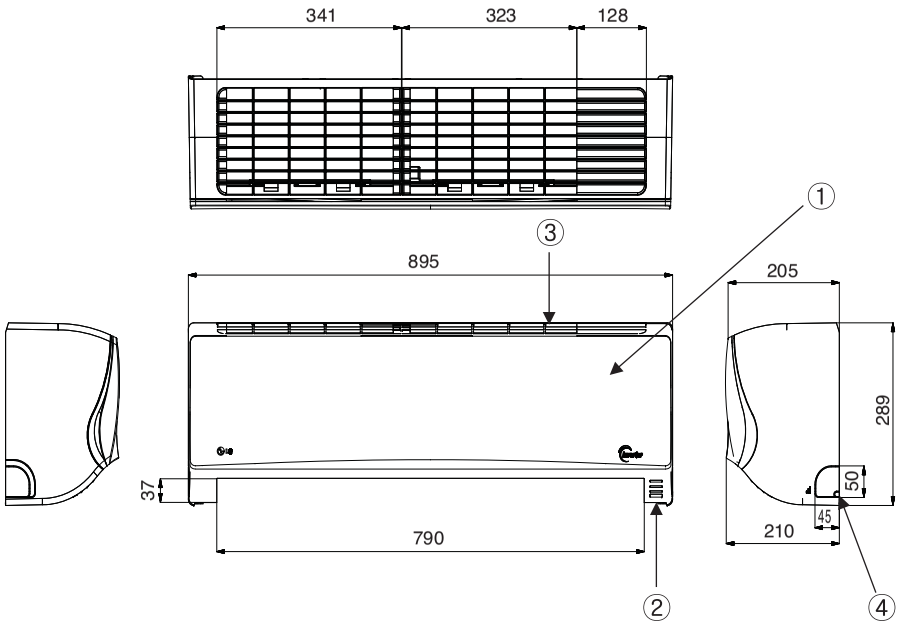

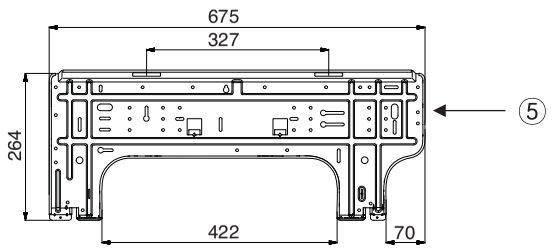

No.	Part Name	Remark
1	Front panel	
2	Display & signal receiver	
3	Air suction grille	
4	Knockout hole	
5	Installation plate	

▣ Note

1. Unit should be installed in compliance with the installation manual in the product box.
2. Unit shall be grounded in accordance with the local regulations or applicable national codes.

Wall Mounted
ARNU18GSC*4 ARNU24GSC*4

[Unit : mm]

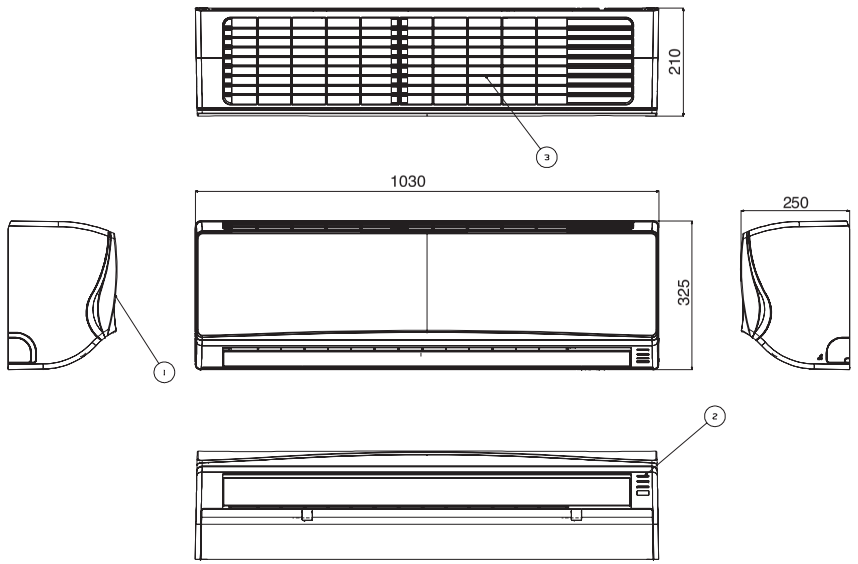

No.	Part Name	Remark
1	Front panel	
2	Display & signal receiver	
3	Air suction grille	
4	Knockout hole	
5	Installation plate	

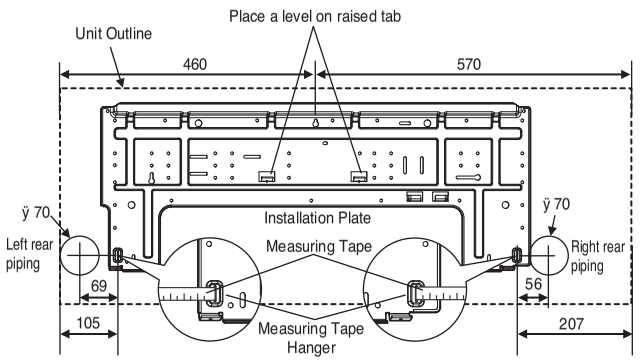

▣ Note
1. Unit should be installed in compliance with the installation manual in the product box.
2. Unit shall be grounded in accordance with the local regulations or applicable national codes.

LG Electronics

CHASSIS CODE: SC

Wall Mounted

ARNU30GSVA4
ARNU36GSVA4

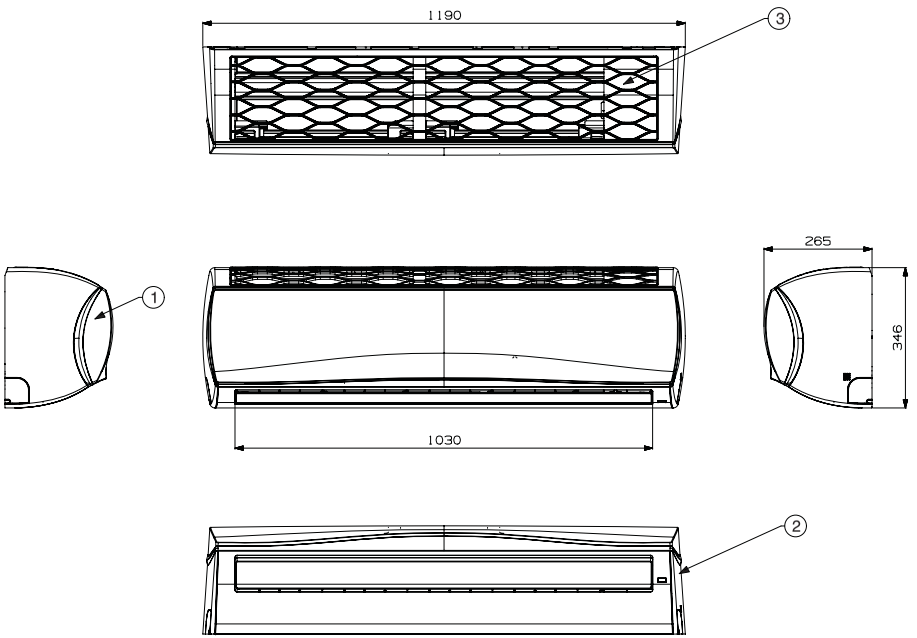

Item No.	Part Name	Remark
1	Front Panel	
2	Display & Signal Receiver	
3	Air Suction Grille	
4	Installation Plate	

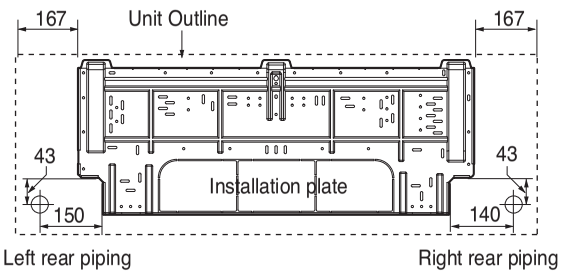

▣ Note

1. Unit should be installed in compliance with the installation manual in the product box.
2. Unit shall be grounded in accordance with the local regulations or applicable national codes.
3. The Unit is powered from the outdoor unit. Therefore power cable should be connected with the outdoor unit.

4. Piping Diagrams

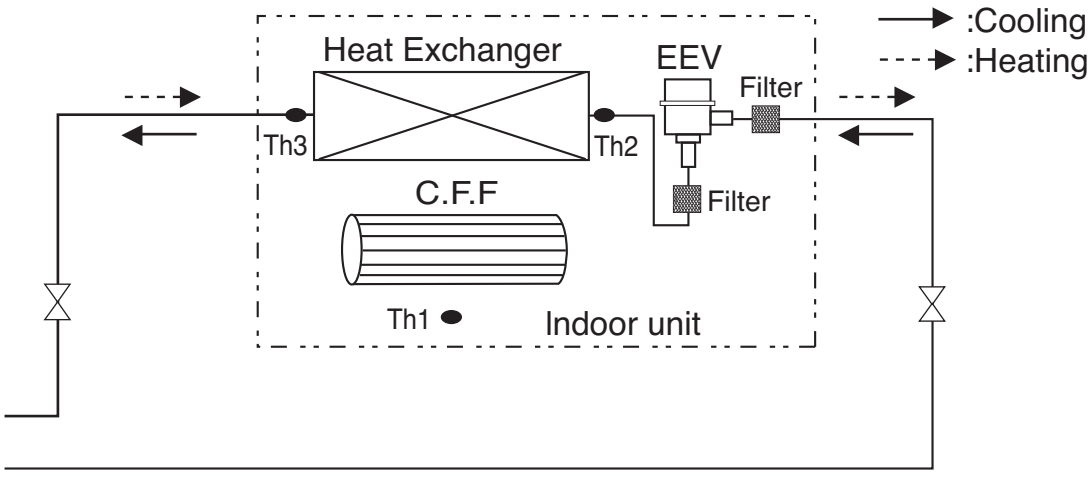

Refrigerant pipe connection port diameter

[Unit: mm(inch)]

MODEL	GAS	LIQUID
ARNU05GSB*4	Ø12.7(1/2)	Ø6.35(1/4)
ARNU07GSB*4	Ø12.7(1/2)	Ø6.35(1/4)
ARNU09GSB*4	Ø12.7(1/2)	Ø6.35(1/4)
ARNU12GSB*4	Ø12.7(1/2)	Ø6.35(1/4)
ARNU15GSB*4	Ø12.7(1/2)	Ø6.35(1/4)
ARNU18GSC*4	Ø12.7(1/2)	Ø6.35(1/4)
ARNU24GSC*4	Ø15.88(5/8)	Ø9.52(3/8)
ARNU30GSVA4	Ø15.88(5/8)	Ø9.52(3/8)
ARNU36GSVA4	Ø15.88(5/8)	Ø9.52(3/8)

LOC.	Description
Th1	Room thermistor
Th2	Pipe in thermistor
Th3	Pipe out thermistor

5. Wiring Diagrams

SB/SC Chassis

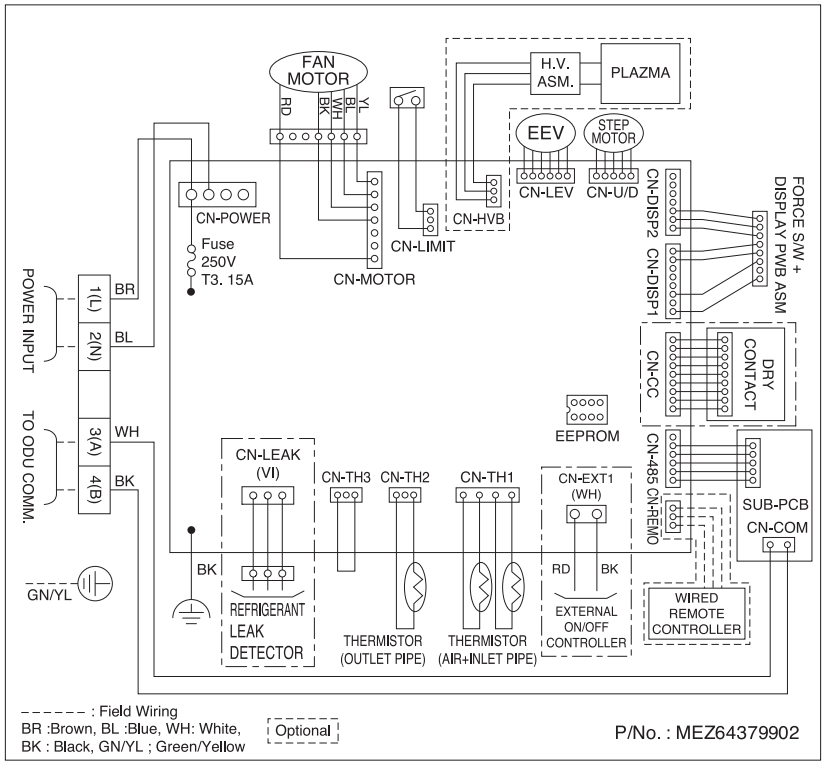

CONNECTOR NUMBER	LOCATION POINT	FUNCTION
CN-POWER	AC Power supply	AC Power line input for indoor
CN-MOTOR	Fan motor output	Motor output of BLDC
CN-485	Communication	Connection between indoor
CN-DISP1	Display	Display of indoor status
CN-DISP2	Display	Display of indoor status
CN-LEV	EEV output	EEV control output
CN-U/D	Step motor	Step motor output
CN-TH1	Room/inlet pipe sensor	Room and inlet pipe thermistor
CN-TH2	Outlet pipe sensor	Outlet pipe thermistor
CN-REMO	Remote controller	Remote control line
CN-CC	Dry contact	Dry contact line
CN-HVB	Air clean	Air clean control
CN-EXT	External On/Off	External On/Off signal input
CN-LEAK	Refrigerant leak detector	Refrigerant leak detector line

5. Wiring Diagrams

SV Chassis

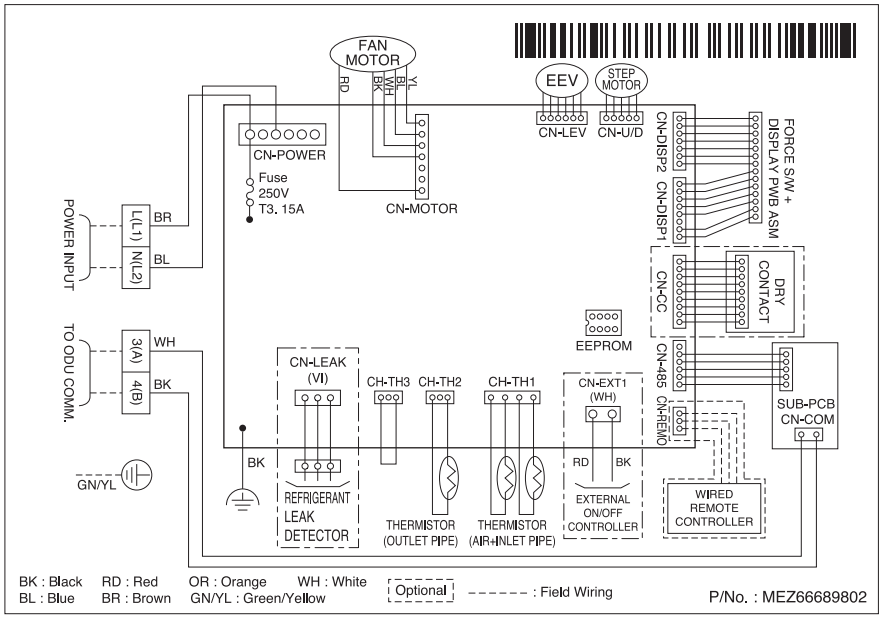

CONNECTOR NUMBER	LOCATION POINT	FUNCTION
CN-POWER	AC Power supply	AC Power line input for indoor
CN-MOTOR	Fan motor output	Motor output of BLDC
CN-485	Communication	Connection between indoor
CN-DISP1	Display	Display of indoor status
CN-DISP2	Display	Display of indoor status
CN-LEV	EEV output	EEV control output
CN-U/D	Step motor	Step motor output
CN-TH1	Room/inlet pipe sensor	Room and inlet pipe thermistor
CN-TH2	Outlet pipe sensor	Outlet pipe thermistor
CN-REMO	Remote controller	Remote control line
CN-CC	Dry contact	Dry contact line
CN-EXT	External On/Off	External On/Off signal input
CN-LEAK	Refrigerant leak detector	Refrigerant leak detector line

6. Capacity Tables

6.1 Cooling Capacity

Cooling Capacity

Capacity Index	Outdoor air temp. (DB, °C)	Indoor air temp. (DB/WB, °C)													
		20		23		26		27		28		30		32	
		14		16		18		19		20		22		24	
		TC	SHC	TC	SHC	TC	SHC	TC	SHC	TC	SHC	TC	SHC	TC	SHC
		kW	kW	kW	kW	kW	kW	kW	kW	kW	kW	kW	kW	kW	kW
1.6	10	1.1	1.0	1.3	1.0	1.5	1.1	1.6	1.2	1.7	1.2	1.9	1.3	2.1	1.2
	12	1.1	1.0	1.3	1.0	1.5	1.1	1.6	1.2	1.7	1.2	1.9	1.3	2.1	1.2
	14	1.1	1.0	1.3	1.0	1.5	1.1	1.6	1.2	1.7	1.2	1.9	1.3	2.1	1.2
	16	1.1	1.0	1.3	1.0	1.5	1.1	1.6	1.2	1.7	1.2	1.9	1.3	2.0	1.2
	18	1.1	1.0	1.3	1.0	1.5	1.1	1.6	1.2	1.7	1.2	1.9	1.3	2.0	1.2
	20	1.1	1.0	1.3	1.0	1.5	1.1	1.6	1.2	1.7	1.2	1.9	1.3	2.0	1.2
	21	1.1	1.0	1.3	1.0	1.5	1.1	1.6	1.2	1.7	1.2	1.9	1.3	2.0	1.2
	23	1.1	1.0	1.3	1.0	1.5	1.1	1.6	1.2	1.7	1.2	1.9	1.3	1.9	1.1
	25	1.1	1.0	1.3	1.0	1.5	1.1	1.6	1.2	1.7	1.2	1.9	1.2	1.9	1.1
	27	1.1	1.0	1.3	1.0	1.5	1.1	1.6	1.2	1.7	1.2	1.8	1.2	1.9	1.1
	29	1.1	1.0	1.3	1.0	1.5	1.1	1.6	1.2	1.7	1.2	1.8	1.2	1.8	1.1
	31	1.1	1.0	1.3	1.0	1.5	1.1	1.6	1.2	1.7	1.2	1.8	1.2	1.8	1.1
	33	1.1	1.0	1.3	1.0	1.5	1.1	1.6	1.2	1.7	1.2	1.8	1.2	1.8	1.0
	35	1.1	1.0	1.3	1.0	1.5	1.1	1.6	1.2	1.7	1.2	1.7	1.1	1.8	1.0
	37	1.1	1.0	1.3	1.0	1.5	1.1	1.6	1.2	1.7	1.2	1.7	1.1	1.7	1.0
	39	1.1	1.0	1.3	1.0	1.5	1.1	1.6	1.2	1.6	1.1	1.7	1.1	1.7	1.0
2.2	10	1.5	1.3	1.8	1.4	2.0	1.6	2.2	1.6	2.4	1.7	2.6	1.7	2.9	1.7
	12	1.5	1.3	1.8	1.4	2.0	1.6	2.2	1.6	2.4	1.7	2.6	1.7	2.9	1.7
	14	1.5	1.3	1.8	1.4	2.0	1.6	2.2	1.6	2.4	1.7	2.6	1.7	2.8	1.7
	16	1.5	1.3	1.8	1.4	2.0	1.6	2.2	1.6	2.4	1.7	2.6	1.7	2.8	1.6
	18	1.5	1.3	1.8	1.4	2.0	1.6	2.2	1.6	2.4	1.7	2.6	1.7	2.7	1.6
	20	1.5	1.3	1.8	1.4	2.0	1.6	2.2	1.6	2.4	1.7	2.6	1.7	2.7	1.6
	21	1.5	1.3	1.8	1.4	2.0	1.6	2.2	1.6	2.4	1.7	2.6	1.7	2.7	1.6
	23	1.5	1.3	1.8	1.4	2.0	1.6	2.2	1.6	2.4	1.7	2.6	1.7	2.6	1.6
	25	1.5	1.3	1.8	1.4	2.0	1.6	2.2	1.6	2.4	1.7	2.6	1.7	2.6	1.5
	27	1.5	1.3	1.8	1.4	2.0	1.6	2.2	1.6	2.4	1.7	2.5	1.7	2.6	1.5
	29	1.5	1.3	1.8	1.4	2.0	1.6	2.2	1.6	2.4	1.7	2.5	1.6	2.5	1.5
	31	1.5	1.3	1.8	1.4	2.0	1.6	2.2	1.6	2.4	1.7	2.5	1.6	2.5	1.5
	33	1.5	1.3	1.8	1.4	2.0	1.6	2.2	1.6	2.4	1.7	2.4	1.6	2.4	1.4
	35	1.5	1.3	1.8	1.4	2.0	1.6	2.2	1.6	2.4	1.7	2.4	1.6	2.4	1.4
	37	1.5	1.3	1.8	1.4	2.0	1.6	2.2	1.6	2.3	1.6	2.3	1.5	2.4	1.4
	39	1.5	1.3	1.8	1.4	2.0	1.6	2.2	1.6	2.2	1.6	2.3	1.5	2.4	1.4
2.8	10	1.9	1.6	2.2	1.7	2.6	1.9	2.8	1.9	3.0	2.0	3.4	2.1	3.7	2.0
	12	1.9	1.6	2.2	1.7	2.6	1.9	2.8	1.9	3.0	2.0	3.4	2.1	3.6	2.0
	14	1.9	1.6	2.2	1.7	2.6	1.9	2.8	1.9	3.0	2.0	3.4	2.1	3.6	2.0
	16	1.9	1.6	2.2	1.7	2.6	1.9	2.8	1.9	3.0	2.0	3.4	2.1	3.5	2.0
	18	1.9	1.6	2.2	1.7	2.6	1.9	2.8	1.9	3.0	2.0	3.4	2.1	3.5	2.0
	20	1.9	1.6	2.2	1.7	2.6	1.9	2.8	1.9	3.0	2.0	3.4	2.1	3.4	1.9
	21	1.9	1.6	2.2	1.7	2.6	1.9	2.8	1.9	3.0	2.0	3.4	2.1	3.4	1.9
	23	1.9	1.6	2.2	1.7	2.6	1.9	2.8	1.9	3.0	2.0	3.4	2.1	3.4	1.9
	25	1.9	1.6	2.2	1.7	2.6	1.9	2.8	1.9	3.0	2.0	3.3	2.0	3.3	1.9
	27	1.9	1.6	2.2	1.7	2.6	1.9	2.8	1.9	3.0	2.0	3.2	2.0	3.3	1.9
	29	1.9	1.6	2.2	1.7	2.6	1.9	2.8	1.9	3.0	2.0	3.2	2.0	3.2	1.8
	31	1.9	1.6	2.2	1.7	2.6	1.9	2.8	1.9	3.0	2.0	3.2	1.9	3.2	1.8
	33	1.9	1.6	2.2	1.7	2.6	1.9	2.8	1.9	3.0	2.0	3.1	1.9	3.1	1.7
	35	1.9	1.6	2.2	1.7	2.6	1.9	2.8	1.9	3.0	2.0	3.0	1.9	3.1	1.7
	37	1.9	1.6	2.2	1.7	2.6	1.9	2.8	1.9	2.9	1.9	3.0	1.9	3.0	1.7
	39	1.9	1.6	2.2	1.7	2.6	1.9	2.8	1.9	2.8	1.9	2.9	1.8	3.0	1.7

Notes:

TC: Total Capacity(kW)

SHC: Sensible Heat Capacity(kW)

1. Capacity tables show the representative value of conditions which may occur.
2. Refer to Capacity Correction Factor in the outdoor unit PDB for the actual performance data of each indoor unit and outdoor unit combination.

6. Capacity Tables

Cooling Capacity

Capacity Index	Outdoor air temp. (DB, °C)	Indoor air temp. (DB/WB, °C)													
		20		23		26		27		28		30		32	
		14		16		18		19		20		22		24	
		TC	SHC	TC	SHC	TC	SHC	TC	SHC	TC	SHC	TC	SHC	TC	SHC
		kW	kW	kW	kW	kW	kW	kW	kW	kW	kW	kW	kW	kW	kW
3.6	10	2.4	2.0	2.9	2.2	3.3	2.4	3.6	2.4	3.9	2.5	4.3	2.6	4.7	2.6
	12	2.4	2.0	2.9	2.2	3.3	2.4	3.6	2.4	3.9	2.5	4.3	2.6	4.7	2.6
	14	2.4	2.0	2.9	2.2	3.3	2.4	3.6	2.4	3.9	2.5	4.3	2.6	4.6	2.5
	16	2.4	2.0	2.9	2.2	3.3	2.4	3.6	2.4	3.9	2.5	4.3	2.6	4.6	2.5
	18	2.4	2.0	2.9	2.2	3.3	2.4	3.6	2.4	3.9	2.5	4.3	2.6	4.5	2.5
	20	2.4	2.0	2.9	2.2	3.3	2.4	3.6	2.4	3.9	2.5	4.3	2.6	4.4	2.4
	21	2.4	2.0	2.9	2.2	3.3	2.4	3.6	2.4	3.9	2.5	4.3	2.6	4.4	2.4
	23	2.4	2.0	2.9	2.2	3.3	2.4	3.6	2.4	3.9	2.5	4.3	2.6	4.3	2.4
	25	2.4	2.0	2.9	2.2	3.3	2.4	3.6	2.4	3.9	2.5	4.3	2.6	4.3	2.4
	27	2.4	2.0	2.9	2.2	3.3	2.4	3.6	2.4	3.9	2.5	4.2	2.5	4.2	2.4
	29	2.4	2.0	2.9	2.2	3.3	2.4	3.6	2.4	3.9	2.5	4.1	2.5	4.2	2.3
	31	2.4	2.0	2.9	2.2	3.3	2.4	3.6	2.4	3.9	2.5	4.1	2.4	4.1	2.3
	33	2.4	2.0	2.9	2.2	3.3	2.4	3.6	2.4	3.9	2.5	4.0	2.4	4.0	2.2
	35	2.4	2.0	2.9	2.2	3.3	2.4	3.6	2.4	3.9	2.5	3.9	2.4	4.0	2.2
	37	2.4	2.0	2.9	2.2	3.3	2.4	3.6	2.4	3.8	2.4	3.8	2.4	3.9	2.2
	39	2.4	2.0	2.9	2.2	3.3	2.4	3.6	2.4	3.7	2.4	3.8	2.3	3.9	2.1
4.5	10	3.0	2.6	3.6	2.8	4.2	3.0	4.5	3.1	4.8	3.2	5.4	3.3	5.9	3.3
	12	3.0	2.6	3.6	2.8	4.2	3.0	4.5	3.1	4.8	3.2	5.4	3.3	5.8	3.3
	14	3.0	2.6	3.6	2.8	4.2	3.0	4.5	3.1	4.8	3.2	5.4	3.3	5.8	3.2
	16	3.0	2.6	3.6	2.8	4.2	3.0	4.5	3.1	4.8	3.2	5.4	3.3	5.7	3.2
	18	3.0	2.6	3.6	2.8	4.2	3.0	4.5	3.1	4.8	3.2	5.4	3.3	5.6	3.2
	20	3.0	2.6	3.6	2.8	4.2	3.0	4.5	3.1	4.8	3.2	5.4	3.3	5.5	3.1
	21	3.0	2.6	3.6	2.8	4.2	3.0	4.5	3.1	4.8	3.2	5.4	3.3	5.5	3.1
	23	3.0	2.6	3.6	2.8	4.2	3.0	4.5	3.1	4.8	3.2	5.4	3.3	5.4	3.0
	25	3.0	2.6	3.6	2.8	4.2	3.0	4.5	3.1	4.8	3.2	5.3	3.3	5.3	3.0
	27	3.0	2.6	3.6	2.8	4.2	3.0	4.5	3.1	4.8	3.2	5.2	3.2	5.3	3.0
	29	3.0	2.6	3.6	2.8	4.2	3.0	4.5	3.1	4.8	3.2	5.1	3.2	5.2	2.9
	31	3.0	2.6	3.6	2.8	4.2	3.0	4.5	3.1	4.8	3.2	5.1	3.1	5.1	2.9
	33	3.0	2.6	3.6	2.8	4.2	3.0	4.5	3.1	4.8	3.2	4.9	3.1	5.0	2.8
	35	3.0	2.6	3.6	2.8	4.2	3.0	4.5	3.1	4.8	3.2	4.9	3.0	4.9	2.8
	37	3.0	2.6	3.6	2.8	4.2	3.0	4.5	3.1	4.7	3.1	4.8	3.0	4.9	2.7
	39	3.0	2.6	3.6	2.8	4.2	3.0	4.5	3.1	4.6	3.0	4.7	2.9	4.8	2.7
5.6	10	3.8	3.1	4.5	3.4	5.2	3.7	5.6	3.8	6.0	3.9	6.7	4.0	7.3	4.0
	12	3.8	3.1	4.5	3.4	5.2	3.7	5.6	3.8	6.0	3.9	6.7	4.0	7.3	4.0
	14	3.8	3.1	4.5	3.4	5.2	3.7	5.6	3.8	6.0	3.9	6.7	4.0	7.2	3.9
	16	3.8	3.1	4.5	3.4	5.2	3.7	5.6	3.8	6.0	3.9	6.7	4.0	7.1	3.8
	18	3.8	3.1	4.5	3.4	5.2	3.7	5.6	3.8	6.0	3.9	6.7	4.0	6.9	3.8
	20	3.8	3.1	4.5	3.4	5.2	3.7	5.6	3.8	6.0	3.9	6.7	4.0	6.9	3.8
	21	3.8	3.1	4.5	3.4	5.2	3.7	5.6	3.8	6.0	3.9	6.7	4.0	6.9	3.8
	23	3.8	3.1	4.5	3.4	5.2	3.7	5.6	3.8	6.0	3.9	6.7	4.0	6.7	3.7
	25	3.8	3.1	4.5	3.4	5.2	3.7	5.6	3.8	6.0	3.9	6.6	4.0	6.6	3.6
	27	3.8	3.1	4.5	3.4	5.2	3.7	5.6	3.8	6.0	3.9	6.5	3.9	6.5	3.6
	29	3.8	3.1	4.5	3.4	5.2	3.7	5.6	3.8	6.0	3.9	6.4	3.8	6.5	3.5
	31	3.8	3.1	4.5	3.4	5.2	3.7	5.6	3.8	6.0	3.9	6.3	3.8	6.4	3.5
	33	3.8	3.1	4.5	3.4	5.2	3.7	5.6	3.8	6.0	3.9	6.2	3.8	6.2	3.4
	35	3.8	3.1	4.5	3.4	5.2	3.7	5.6	3.8	6.0	3.9	6.1	3.7	6.2	3.4
	37	3.8	3.1	4.5	3.4	5.2	3.7	5.6	3.8	5.8	3.8	5.9	3.6	6.1	3.3
	39	3.8	3.1	4.5	3.4	5.2	3.7	5.6	3.8	5.7	3.7	5.8	3.5	6.0	3.2

Notes:
TC: Total Capacity(kW)
SHC: Sensible Heat Capacity(kW)
1. Capacity tables show the representative value of conditions which may occur.
2. Refer to Capacity Correction Factor in the outdoor unit PDB for the actual performance data of each indoor unit and outdoor unit combination.

6. Capacity Tables

Cooling Capacity

Capacity Index	Outdoor air temp. (DB, °C)	Indoor air temp. (DB/WB, °C)													
		20		23		26		27		28		30		32	
		14		16		18		19		20		22		24	
		TC	SHC	TC	SHC	TC	SHC	TC	SHC	TC	SHC	TC	SHC	TC	SHC
		kW	kW	kW	kW	kW	kW	kW	kW	kW	kW	kW	kW	kW	kW
7.1	10	4.8	4.0	5.7	4.4	6.6	4.7	7.1	4.8	7.6	5.0	8.5	5.2	9.3	5.1
	12	4.8	4.0	5.7	4.4	6.6	4.7	7.1	4.8	7.6	5.0	8.5	5.2	9.2	5.1
	14	4.8	4.0	5.7	4.4	6.6	4.7	7.1	4.8	7.6	5.0	8.5	5.2	9.1	5.0
	16	4.8	4.0	5.7	4.4	6.6	4.7	7.1	4.8	7.6	5.0	8.5	5.2	9.0	4.9
	18	4.8	4.0	5.7	4.4	6.6	4.7	7.1	4.8	7.6	5.0	8.5	5.2	8.8	4.9
	20	4.8	4.0	5.7	4.4	6.6	4.7	7.1	4.8	7.6	5.0	8.5	5.2	8.7	4.8
	21	4.8	4.0	5.7	4.4	6.6	4.7	7.1	4.8	7.6	5.0	8.5	5.2	8.7	4.8
	23	4.8	4.0	5.7	4.4	6.6	4.7	7.1	4.8	7.6	5.0	8.5	5.2	8.5	4.7
	25	4.8	4.0	5.7	4.4	6.6	4.7	7.1	4.8	7.6	5.0	8.4	5.1	8.4	4.6
	27	4.8	4.0	5.7	4.4	6.6	4.7	7.1	4.8	7.6	5.0	8.2	5.0	8.3	4.6
	29	4.8	4.0	5.7	4.4	6.6	4.7	7.1	4.8	7.6	5.0	8.1	4.9	8.2	4.5
	31	4.8	4.0	5.7	4.4	6.6	4.7	7.1	4.8	7.6	5.0	8.0	4.8	8.1	4.4
	33	4.8	4.0	5.7	4.4	6.6	4.7	7.1	4.8	7.6	5.0	7.8	4.8	7.9	4.4
	35	4.8	4.0	5.7	4.4	6.6	4.7	7.1	4.8	7.6	5.0	7.7	4.7	7.8	4.4
	37	4.8	4.0	5.7	4.4	6.6	4.7	7.1	4.8	7.4	4.8	7.5	4.6	7.7	4.3
	39	4.8	4.0	5.7	4.4	6.6	4.7	7.1	4.8	7.2	4.7	7.4	4.5	7.6	4.2
9.0	10	5.9	5.2	7.1	5.7	8.2	6.2	8.8	6.3	9.4	6.6	10.5	6.8	11.5	6.7
	12	5.9	5.2	7.1	5.7	8.2	6.2	8.8	6.3	9.4	6.6	10.5	6.8	11.4	6.7
	14	5.9	5.2	7.1	5.7	8.2	6.2	8.8	6.3	9.4	6.6	10.5	6.8	11.3	6.6
	16	5.9	5.2	7.1	5.7	8.2	6.2	8.8	6.3	9.4	6.6	10.5	6.8	11.2	6.5
	18	5.9	5.2	7.1	5.7	8.2	6.2	8.8	6.3	9.4	6.6	10.5	6.8	10.9	6.5
	20	5.9	5.2	7.1	5.7	8.2	6.2	8.8	6.3	9.4	6.6	10.5	6.8	10.8	6.3
	21	5.9	5.2	7.1	5.7	8.2	6.2	8.8	6.3	9.4	6.6	10.5	6.8	10.8	6.3
	23	5.9	5.2	7.1	5.7	8.2	6.2	8.8	6.3	9.4	6.6	10.5	6.8	10.5	6.2
	25	5.9	5.2	7.1	5.7	8.2	6.2	8.8	6.3	9.4	6.6	10.4	6.7	10.4	6.1
	27	5.9	5.2	7.1	5.7	8.2	6.2	8.8	6.3	9.4	6.6	10.2	6.6	10.3	6.1
	29	5.9	5.2	7.1	5.7	8.2	6.2	8.8	6.3	9.4	6.6	10.0	6.5	10.2	6.0
	31	5.9	5.2	7.1	5.7	8.2	6.2	8.8	6.3	9.4	6.6	9.9	6.3	10.0	5.8
	33	5.9	5.2	7.1	5.7	8.2	6.2	8.8	6.3	9.4	6.6	9.7	6.3	9.8	5.7
	35	5.9	5.2	7.1	5.7	8.2	6.2	8.8	6.3	9.4	6.6	9.5	6.2	9.7	5.7
	37	5.9	5.2	7.1	5.7	8.2	6.2	8.8	6.3	9.2	6.3	9.3	6.1	9.5	5.6
	39	5.9	5.2	7.1	5.7	8.2	6.2	8.8	6.3	8.9	6.2	9.2	6.0	9.4	5.5
10.6	10	7.0	6.0	8.3	6.6	9.7	7.1	10.4	7.3	11.1	7.6	12.5	7.9	13.6	7.7
	12	7.0	6.0	8.3	6.6	9.7	7.1	10.4	7.3	11.1	7.6	12.5	7.9	13.5	7.7
	14	7.0	6.0	8.3	6.6	9.7	7.1	10.4	7.3	11.1	7.6	12.5	7.9	13.3	7.6
	16	7.0	6.0	8.3	6.6	9.7	7.1	10.4	7.3	11.1	7.6	12.5	7.9	13.2	7.4
	18	7.0	6.0	8.3	6.6	9.7	7.1	10.4	7.3	11.1	7.6	12.5	7.9	12.9	7.4
	20	7.0	6.0	8.3	6.6	9.7	7.1	10.4	7.3	11.1	7.6	12.5	7.9	12.7	7.3
	21	7.0	6.0	8.3	6.6	9.7	7.1	10.4	7.3	11.1	7.6	12.5	7.9	12.7	7.3
	23	7.0	6.0	8.3	6.6	9.7	7.1	10.4	7.3	11.1	7.6	12.5	7.9	12.5	7.1
	25	7.0	6.0	8.3	6.6	9.7	7.1	10.4	7.3	11.1	7.6	12.3	7.7	12.3	7.0
	27	7.0	6.0	8.3	6.6	9.7	7.1	10.4	7.3	11.1	7.6	12.0	7.6	12.2	7.0
	29	7.0	6.0	8.3	6.6	9.7	7.1	10.4	7.3	11.1	7.6	11.9	7.4	12.0	6.9
	31	7.0	6.0	8.3	6.6	9.7	7.1	10.4	7.3	11.1	7.6	11.7	7.3	11.9	6.7
	33	7.0	6.0	8.3	6.6	9.7	7.1	10.4	7.3	11.1	7.6	11.4	7.3	11.6	6.6
	35	7.0	6.0	8.3	6.6	9.7	7.1	10.4	7.3	11.1	7.6	11.3	7.1	11.4	6.6
	37	7.0	6.0	8.3	6.6	9.7	7.1	10.4	7.3	10.8	7.3	11.0	7.0	11.3	6.4
	39	7.0	6.0	8.3	6.6	9.7	7.1	10.4	7.3	10.5	7.1	10.8	6.9	11.1	6.3

Notes:

TC: Total Capacity(kW)

SHC: Sensible Heat Capacity(kW)

1. Capacity tables show the representative value of conditions which may occur.
2. Refer to Capacity Correction Factor in the outdoor unit PDB for the actual performance data of each indoor unit and outdoor unit combination.

6. Capacity Tables

6.2 Heating Capacity

Heating Capacity

Capacity Index	Outdoor air temp.		Indoor air temp. (DB, °C)					
			16	18	20	21	22	24
	DB(°C)	WB(°C)	TC	TC	TC	TC	TC	TC
			kW	kW	kW	kW	kW	kW
1.6	-24.8	-25.0	1.0	1.0	1.0	1.0	1.0	1.0
	-21.8	-22.0	1.3	1.3	1.3	1.3	1.3	1.2
	-19.8	-20.0	1.3	1.3	1.3	1.3	1.3	1.3
	-18.8	-19.0	1.4	1.3	1.3	1.3	1.3	1.3
	-16.7	-17.0	1.4	1.4	1.4	1.4	1.4	1.4
	-14.7	-15.0	1.5	1.5	1.5	1.5	1.5	1.5
	-12.6	-13.0	1.6	1.6	1.6	1.6	1.5	1.5
	-10.5	-11.0	1.6	1.6	1.6	1.6	1.6	1.6
	-9.5	-10.0	1.7	1.7	1.7	1.7	1.7	1.6
	-8.5	-9.1	1.7	1.7	1.7	1.7	1.7	1.6
	-7.0	-7.6	1.7	1.7	1.7	1.7	1.7	1.6
	-5.0	-5.6	1.8	1.8	1.8	1.7	1.7	1.6
	-3.0	-3.7	1.9	1.8	1.8	1.7	1.7	1.6
	0.0	-0.7	1.9	1.9	1.8	1.7	1.7	1.6
	3.0	2.2	2.0	1.9	1.8	1.7	1.7	1.6
	5.0	4.1	2.0	1.9	1.8	1.7	1.7	1.6
	7.0	6.0	2.0	1.9	1.8	1.7	1.7	1.6
	9.0	7.9	2.0	1.9	1.8	1.7	1.7	1.6
	11.0	9.8	2.0	1.9	1.8	1.7	1.7	1.6
	13.0	11.8	2.0	1.9	1.8	1.7	1.7	1.6
	15.0	13.7	2.0	1.9	1.8	1.7	1.7	1.6
2.2	-24.8	-25.0	1.4	1.4	1.4	1.4	1.4	1.4
	-21.8	-22.0	1.7	1.7	1.7	1.7	1.7	1.7
	-19.8	-20.0	1.8	1.8	1.8	1.8	1.8	1.8
	-18.8	-19.0	1.9	1.9	1.9	1.9	1.9	1.9
	-16.7	-17.0	2.0	2.0	2.0	2.0	2.0	2.0
	-14.7	-15.0	2.1	2.1	2.1	2.1	2.1	2.0
	-12.6	-13.0	2.2	2.2	2.2	2.2	2.1	2.1
	-10.5	-11.0	2.3	2.3	2.2	2.2	2.2	2.2
	-9.5	-10.0	2.3	2.3	2.3	2.3	2.3	2.2
	-8.5	-9.1	2.3	2.3	2.3	2.3	2.3	2.2
	-7.0	-7.6	2.4	2.4	2.4	2.4	2.3	2.2
	-5.0	-5.6	2.5	2.5	2.5	2.4	2.3	2.2
	-3.0	-3.7	2.6	2.6	2.5	2.4	2.3	2.2
	0.0	-0.7	2.7	2.6	2.5	2.4	2.3	2.2
	3.0	2.2	2.7	2.7	2.5	2.4	2.3	2.2
	5.0	4.1	2.8	2.7	2.5	2.4	2.3	2.2
	7.0	6.0	2.8	2.7	2.5	2.4	2.3	2.2
	9.0	7.9	2.8	2.7	2.5	2.4	2.3	2.2
	11.0	9.8	2.8	2.7	2.5	2.4	2.3	2.2
	13.0	11.8	2.8	2.7	2.5	2.4	2.3	2.2
	15.0	13.7	2.8	2.7	2.5	2.4	2.3	2.2
2.8	-24.8	-25.0	1.9	1.9	1.8	1.8	1.8	1.8
	-21.8	-22.0	2.2	2.2	2.2	2.2	2.2	2.2
	-19.8	-20.0	2.4	2.4	2.3	2.3	2.3	2.3
	-18.8	-19.0	2.4	2.4	2.4	2.4	2.4	2.4
	-16.7	-17.0	2.5	2.5	2.5	2.5	2.5	2.5
	-14.7	-15.0	2.7	2.7	2.6	2.6	2.6	2.6
	-12.6	-13.0	2.8	2.8	2.8	2.8	2.7	2.7
	-10.5	-11.0	2.9	2.9	2.9	2.9	2.9	2.8
	-9.5	-10.0	3.0	3.0	2.9	2.9	2.9	2.8
	-8.5	-9.1	3.0	3.0	3.0	3.0	3.0	2.8
	-7.0	-7.6	3.1	3.1	3.1	3.1	3.0	2.8
	-5.0	-5.6	3.2	3.2	3.2	3.1	3.0	2.8
	-3.0	-3.7	3.4	3.3	3.2	3.1	3.0	2.8
	0.0	-0.7	3.4	3.3	3.2	3.1	3.0	2.8
	3.0	2.2	3.5	3.4	3.2	3.1	3.0	2.8
	5.0	4.1	3.6	3.4	3.2	3.1	3.0	2.8
	7.0	6.0	3.6	3.4	3.2	3.1	3.0	2.8
	9.0	7.9	3.6	3.4	3.2	3.1	3.0	2.8
	11.0	9.8	3.6	3.4	3.2	3.1	3.0	2.8
	13.0	11.8	3.6	3.4	3.2	3.1	3.0	2.8
	15.0	13.7	3.6	3.4	3.2	3.1	3.0	2.8

Notes:
TC: Total Capacity(kW)
1. Capacity tables show the representative value of conditions which may occur.
2. is shown as reference. When selecting the outdoor units, avoid the outdoor air temperature range shown by .
3. In accordance with operation limits of outdoor unit, applicable range of capacity tables is different.
4. Refer to Capacity Correction Factor in the outdoor unit PDB for the actual performance data of each indoor unit and outdoor unit combination.

6. Capacity Tables

Heating Capacity

Capacity Index	Outdoor air temp.		Indoor air temp. (DB, °C)					
			16	18	20	21	22	24
	DB(°C)	WB(°C)	TC	TC	TC	TC	TC	TC
			kW	kW	kW	kW	kW	kW
3.6	-24.8	-25.0	2.3	2.3	2.3	2.3	2.3	2.3
	-21.8	-22.0	2.8	2.8	2.8	2.8	2.8	2.8
	-19.8	-20.0	2.9	2.9	2.9	2.9	2.9	2.9
	-18.8	-19.0	3.0	3.0	3.0	3.0	3.0	3.0
	-16.7	-17.0	3.1	3.1	3.1	3.1	3.1	3.1
	-14.7	-15.0	3.3	3.3	3.3	3.3	3.3	3.3
	-12.6	-13.0	3.5	3.4	3.4	3.4	3.4	3.4
	-10.5	-11.0	3.6	3.6	3.6	3.6	3.6	3.5
	-9.5	-10.0	3.7	3.7	3.7	3.7	3.7	3.5
	-8.5	-9.1	3.8	3.8	3.7	3.7	3.7	3.5
	-7.0	-7.6	3.9	3.9	3.9	3.8	3.7	3.5
	-5.0	-5.6	4.0	4.0	4.0	3.9	3.7	3.5
	-3.0	-3.7	4.2	4.1	4.0	3.9	3.7	3.5
	0.0	-0.7	4.3	4.1	4.0	3.9	3.7	3.5
	3.0	2.2	4.4	4.3	4.0	3.9	3.7	3.5
	5.0	4.1	4.5	4.3	4.0	3.9	3.7	3.5
	7.0	6.0	4.5	4.3	4.0	3.9	3.7	3.5
	9.0	7.9	4.5	4.3	4.0	3.9	3.7	3.5
	11.0	9.8	4.5	4.3	4.0	3.9	3.7	3.5
	13.0	11.8	4.5	4.3	4.0	3.9	3.7	3.5
	15.0	13.7	4.5	4.3	4.0	3.9	3.7	3.5
4.5	-24.8	-25.0	2.9	2.9	2.9	2.9	2.9	2.9
	-21.8	-22.0	3.5	3.5	3.5	3.5	3.5	3.5
	-19.8	-20.0	3.7	3.7	3.7	3.7	3.7	3.6
	-18.8	-19.0	3.8	3.7	3.7	3.7	3.7	3.7
	-16.7	-17.0	3.9	3.9	3.9	3.9	3.9	3.9
	-14.7	-15.0	4.1	4.1	4.1	4.1	4.1	4.1
	-12.6	-13.0	4.3	4.3	4.3	4.3	4.3	4.3
	-10.5	-11.0	4.5	4.5	4.5	4.5	4.5	4.4
	-9.5	-10.0	4.6	4.6	4.6	4.6	4.6	4.4
	-8.5	-9.1	4.7	4.7	4.7	4.7	4.7	4.4
	-7.0	-7.6	4.8	4.8	4.8	4.8	4.7	4.4
	-5.0	-5.6	5.0	5.0	5.0	4.8	4.7	4.4
	-3.0	-3.7	5.3	5.1	5.0	4.8	4.7	4.4
	0.0	-0.7	5.3	5.2	5.0	4.8	4.7	4.4
	3.0	2.2	5.5	5.3	5.0	4.8	4.7	4.4
	5.0	4.1	5.6	5.3	5.0	4.8	4.7	4.4
	7.0	6.0	5.6	5.3	5.0	4.8	4.7	4.4
	9.0	7.9	5.6	5.3	5.0	4.8	4.7	4.4
	11.0	9.8	5.6	5.3	5.0	4.8	4.7	4.4
	13.0	11.8	5.6	5.3	5.0	4.8	4.7	4.4
	15.0	13.7	5.6	5.3	5.0	4.8	4.7	4.4
5.6	-24.8	-25.0	3.6	3.6	3.6	3.6	3.6	3.6
	-21.8	-22.0	4.4	4.4	4.4	4.4	4.4	4.4
	-19.8	-20.0	4.6	4.6	4.6	4.6	4.6	4.6
	-18.8	-19.0	4.8	4.7	4.7	4.7	4.7	4.7
	-16.7	-17.0	5.0	5.0	5.0	4.9	4.9	4.9
	-14.7	-15.0	5.2	5.2	5.2	5.2	5.2	5.2
	-12.6	-13.0	5.5	5.4	5.4	5.4	5.4	5.4
	-10.5	-11.0	5.7	5.7	5.7	5.7	5.7	5.5
	-9.5	-10.0	5.8	5.8	5.8	5.8	5.8	5.5
	-8.5	-9.1	5.9	5.9	5.9	5.9	5.9	5.5
	-7.0	-7.6	6.1	6.1	6.1	6.0	5.9	5.5
	-5.0	-5.6	6.3	6.3	6.3	6.1	5.9	5.5
	-3.0	-3.7	6.6	6.5	6.3	6.1	5.9	5.5
	0.0	-0.7	6.7	6.5	6.3	6.1	5.9	5.5
	3.0	2.2	6.9	6.7	6.3	6.1	5.9	5.5
	5.0	4.1	7.0	6.7	6.3	6.1	5.9	5.5
	7.0	6.0	7.1	6.7	6.3	6.1	5.9	5.5
	9.0	7.9	7.1	6.7	6.3	6.1	5.9	5.5
	11.0	9.8	7.1	6.7	6.3	6.1	5.9	5.5
	13.0	11.8	7.1	6.7	6.3	6.1	5.9	5.5
	15.0	13.7	7.1	6.7	6.3	6.1	5.9	5.5

Notes:

TC: Total Capacity(kW)

1. Capacity tables show the representative value of conditions which may occur.
2. is shown as reference. When selecting the outdoor units, avoid the outdoor air temperature range shown by .
3. In accordance with operation limits of outdoor unit, applicable range of capacity tables is different.
4. Refer to Capacity Correction Factor in the outdoor unit PDB for the actual performance data of each indoor unit and outdoor unit combination.

6. Capacity Tables

Heating Capacity

Capacity Index	Outdoor air temp.		Indoor air temp. (DB, °C)					
			16	18	20	21	22	24
	DB(°C)	WB(°C)	TC	TC	TC	TC	TC	TC
			kW	kW	kW	kW	kW	kW
7.1	-24.8	-25.0	4.6	4.6	4.6	4.6	4.6	4.6
	-21.8	-22.0	5.6	5.6	5.6	5.6	5.6	5.5
	-19.8	-20.0	5.9	5.9	5.9	5.9	5.9	5.8
	-18.8	-19.0	6.0	6.0	6.0	6.0	6.0	6.0
	-16.7	-17.0	6.3	6.3	6.3	6.3	6.3	6.3
	-14.7	-15.0	6.6	6.6	6.6	6.6	6.6	6.6
	-12.6	-13.0	6.9	6.9	6.9	6.9	6.9	6.9
	-10.5	-11.0	7.2	7.2	7.2	7.2	7.2	7.0
	-9.5	-10.0	7.4	7.4	7.3	7.3	7.3	7.0
	-8.5	-9.1	7.5	7.5	7.5	7.5	7.5	7.0
	-7.0	-7.6	7.7	7.7	7.7	7.7	7.5	7.0
	-5.0	-5.6	8.0	8.0	8.0	7.7	7.5	7.0
	-3.0	-3.7	8.4	8.2	8.0	7.7	7.5	7.0
	0.0	-0.7	8.6	8.3	8.0	7.7	7.5	7.0
	3.0	2.2	8.8	8.5	8.0	7.7	7.5	7.0
	5.0	4.1	8.9	8.5	8.0	7.7	7.5	7.0
	7.0	6.0	9.0	8.5	8.0	7.7	7.5	7.0
	9.0	7.9	9.0	8.5	8.0	7.7	7.5	7.0
	11.0	9.8	9.0	8.5	8.0	7.7	7.5	7.0
	13.0	11.8	9.0	8.5	8.0	7.7	7.5	7.0
	15.0	13.7	9.0	8.5	8.0	7.7	7.5	7.0
9.0	-24.8	-25.0	5.4	5.4	5.4	5.4	5.4	5.4
	-21.8	-22.0	6.6	6.6	6.5	6.5	6.5	6.5
	-19.8	-20.0	6.9	6.9	6.9	6.9	6.9	6.8
	-18.8	-19.0	7.1	7.0	7.0	7.0	7.0	7.0
	-16.7	-17.0	7.4	7.4	7.4	7.4	7.4	7.4
	-14.7	-15.0	7.8	7.8	7.8	7.8	7.8	7.7
	-12.6	-13.0	8.1	8.1	8.1	8.1	8.1	8.1
	-10.5	-11.0	8.5	8.5	8.5	8.5	8.5	8.2
	-9.5	-10.0	8.7	8.7	8.6	8.6	8.6	8.2
	-8.5	-9.1	8.8	8.8	8.8	8.8	8.8	8.2
	-7.0	-7.6	9.1	9.1	9.1	9.0	8.8	8.2
	-5.0	-5.6	9.4	9.4	9.4	9.1	8.8	8.2
	-3.0	-3.7	9.9	9.6	9.4	9.1	8.8	8.2
	0.0	-0.7	10.1	9.7	9.4	9.1	8.8	8.2
	3.0	2.2	10.3	10.0	9.4	9.1	8.8	8.2
	5.0	4.1	10.5	10.0	9.4	9.1	8.8	8.2
	7.0	6.0	10.6	10.0	9.4	9.1	8.8	8.2
	9.0	7.9	10.6	10.0	9.4	9.1	8.8	8.2
	11.0	9.8	10.6	10.0	9.4	9.1	8.8	8.2
	13.0	11.8	10.6	10.0	9.4	9.1	8.8	8.2
	15.0	13.7	10.6	10.0	9.4	9.1	8.8	8.2
10.6	-24.8	-25.0	6.2	6.2	6.2	6.2	6.2	6.2
	-21.8	-22.0	7.6	7.6	7.5	7.5	7.5	7.5
	-19.8	-20.0	7.9	7.9	7.9	7.9	7.9	7.8
	-18.8	-19.0	8.1	8.1	8.1	8.1	8.1	8.1
	-16.7	-17.0	8.5	8.5	8.5	8.5	8.5	8.5
	-14.7	-15.0	9.0	9.0	8.9	8.9	8.9	8.9
	-12.6	-13.0	9.4	9.3	9.3	9.3	9.3	9.3
	-10.5	-11.0	9.8	9.8	9.7	9.7	9.7	9.4
	-9.5	-10.0	10.0	10.0	9.9	9.9	9.9	9.4
	-8.5	-9.1	10.1	10.1	10.1	10.1	10.1	9.4
	-7.0	-7.6	10.4	10.4	10.4	10.4	10.1	9.4
	-5.0	-5.6	10.8	10.8	10.8	10.5	10.1	9.4
	-3.0	-3.7	11.4	11.1	10.8	10.5	10.1	9.4
	0.0	-0.7	11.6	11.2	10.8	10.5	10.1	9.4
	3.0	2.2	11.9	11.5	10.8	10.5	10.1	9.4
	5.0	4.1	12.1	11.5	10.8	10.5	10.1	9.4
	7.0	6.0	12.2	11.5	10.8	10.5	10.1	9.4
	9.0	7.9	12.2	11.5	10.8	10.5	10.1	9.4
	11.0	9.8	12.2	11.5	10.8	10.5	10.1	9.4
	13.0	11.8	12.2	11.5	10.8	10.5	10.1	9.4
	15.0	13.7	12.2	11.5	10.8	10.5	10.1	9.4

Notes:

TC: Total Capacity(kW)

1. Capacity tables show the representative value of conditions which may occur.
2. is shown as reference. When selecting the outdoor units, avoid the outdoor air temperature range shown by .
3. In accordance with operation limits of outdoor unit, applicable range of capacity tables is different.
4. Refer to Capacity Correction Factor in the outdoor unit PDB for the actual performance data of each indoor unit and outdoor unit combination.

7. Air Velocity and Temperature Distribution(Reference Data)

ARNU05GSB*4, ARNU07GSB*4

Cooling

Discharge angle : 15°

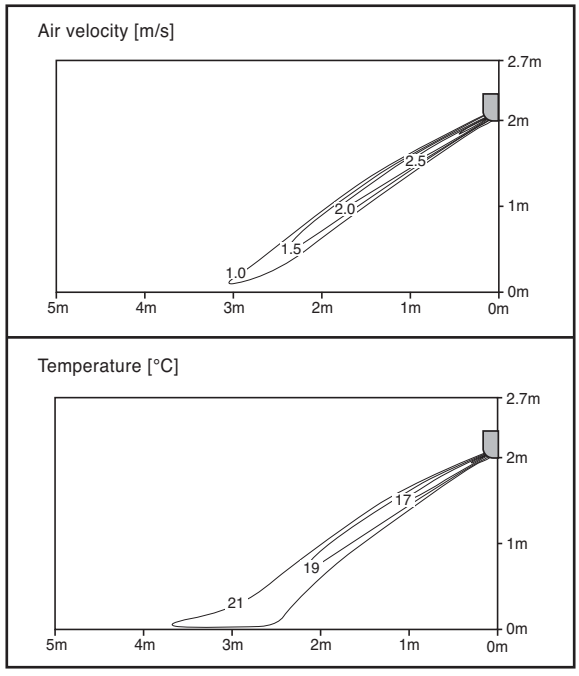

Heating

Discharge angle : 40°

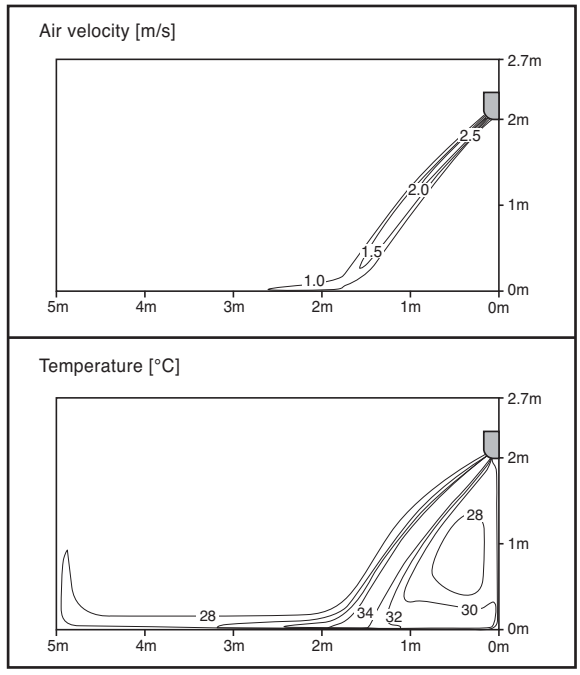

ARNU09GSB*4

Cooling

Discharge angle : 15°

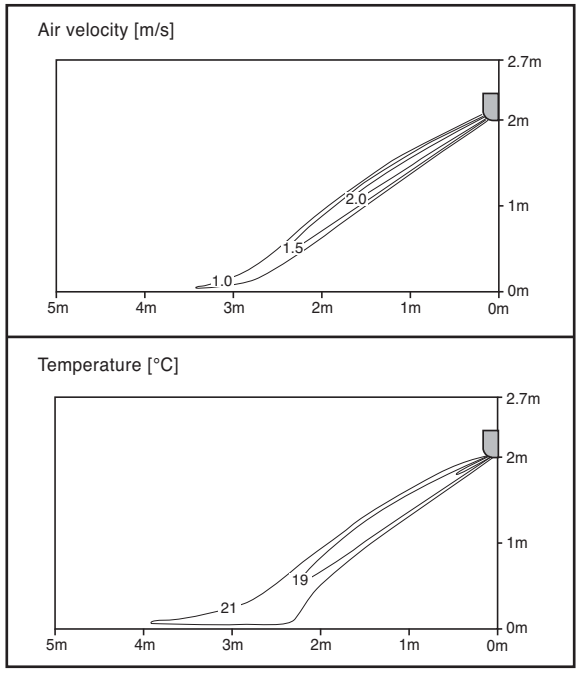

Heating

Discharge angle : 40°

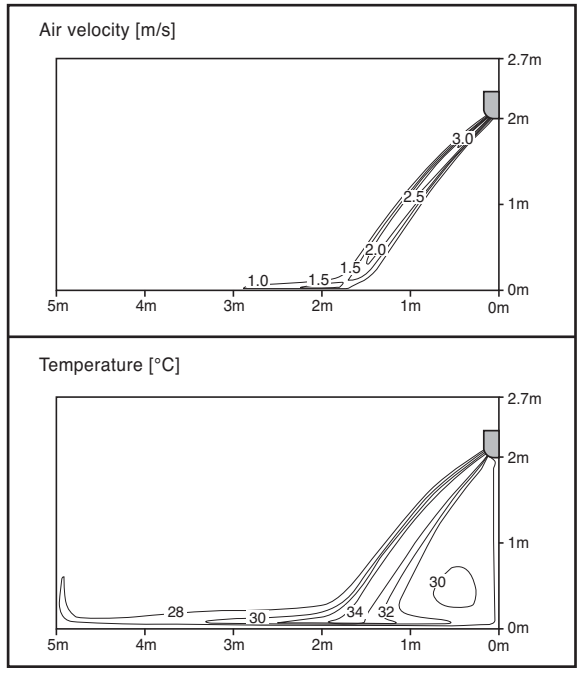

7. Air Velocity and Temperature Distribution(Reference Data)

ARNU12GSB*4

Cooling

Discharge angle : 15°

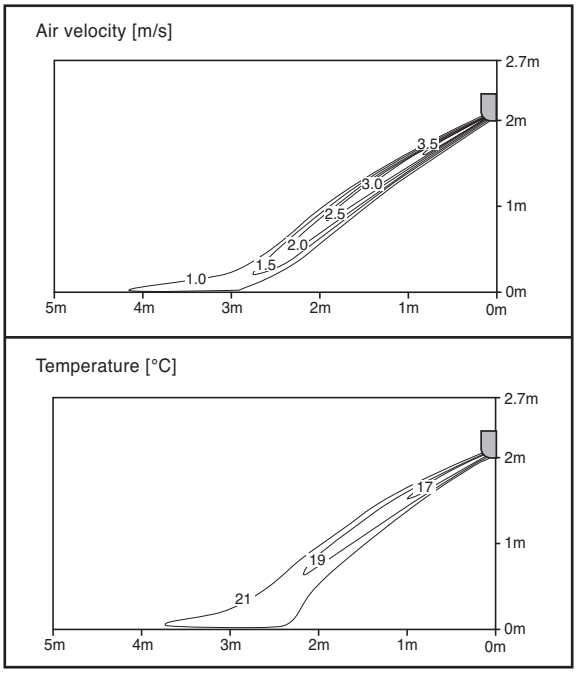

Heating

Discharge angle : 40°

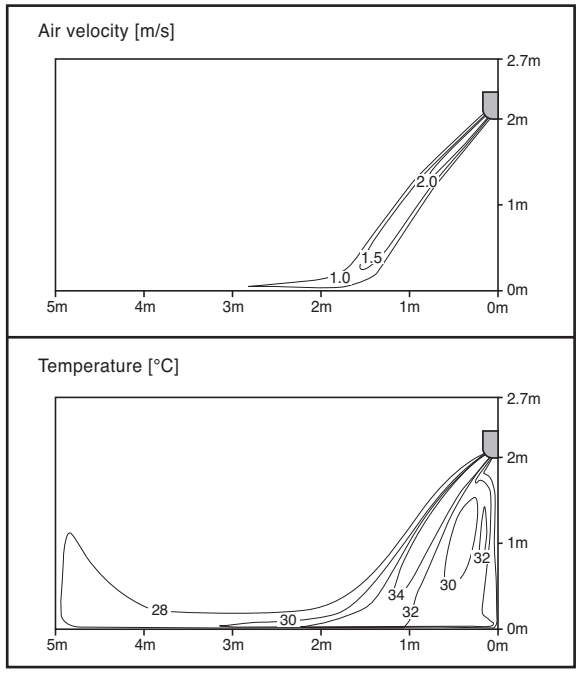

ARNU15GSB*4

Cooling

DDischarge angle : 15°

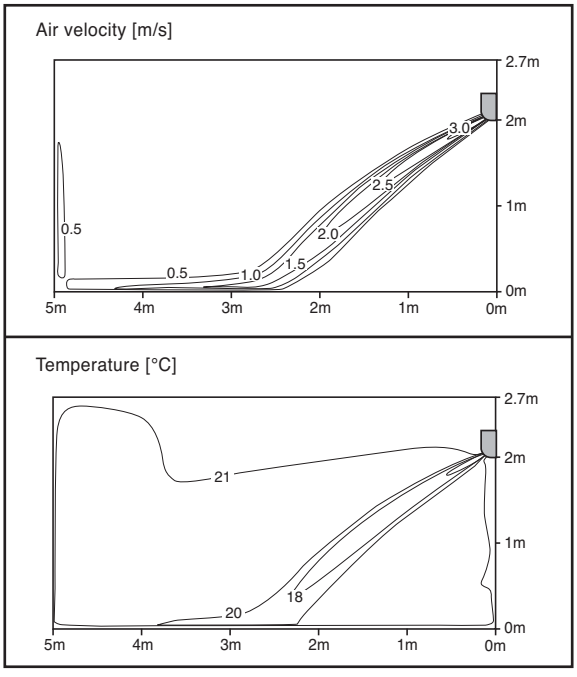

Heating

Discharge angle : 40°

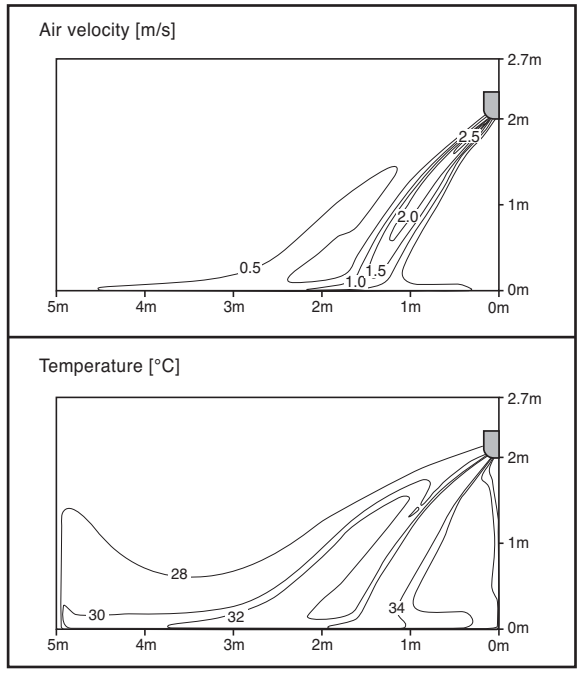

7. Air Velocity and Temperature Distribution(Reference Data)

ARNU18GSC*4

Cooling

Discharge angle : 10°

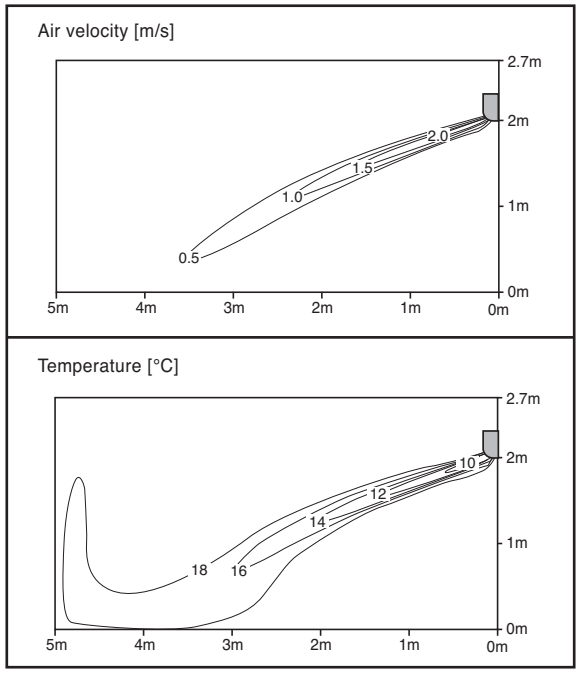

Heating

Discharge angle : 30°

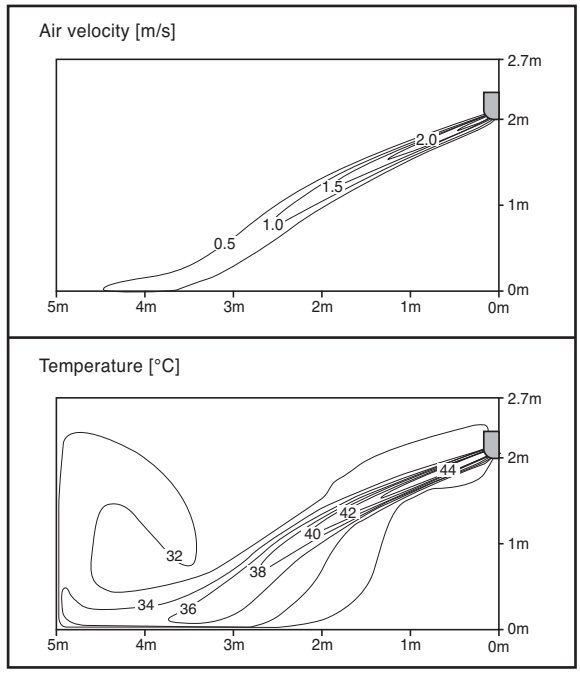

ARNU24GSC*4

Cooling

Discharge angle : 10°

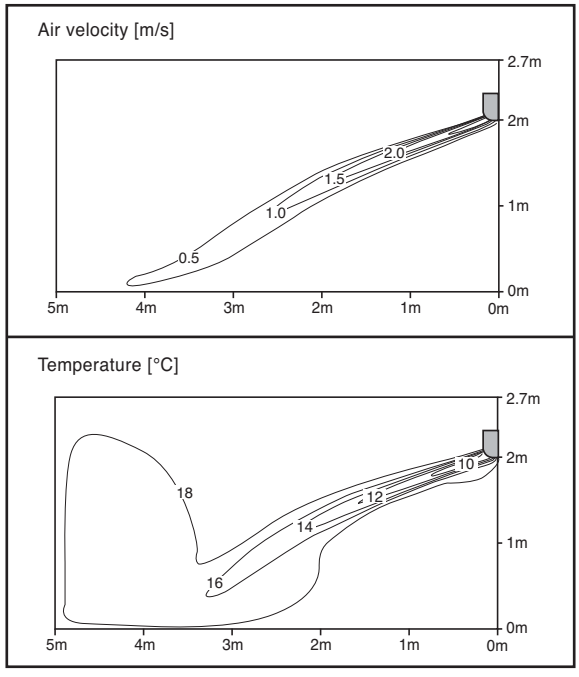

Heating

Discharge angle : 30°

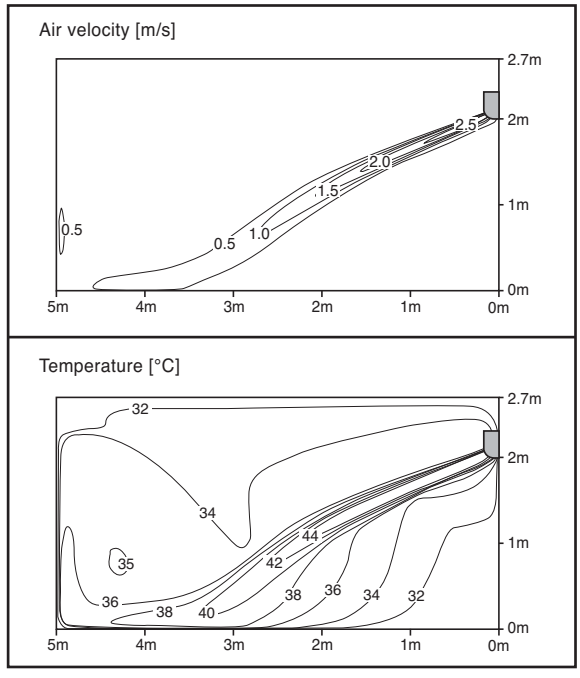

7. Air Velocity and Temperature Distribution(Reference Data)

ARNU30GSVA4

Cooling

Discharge angle: 25°

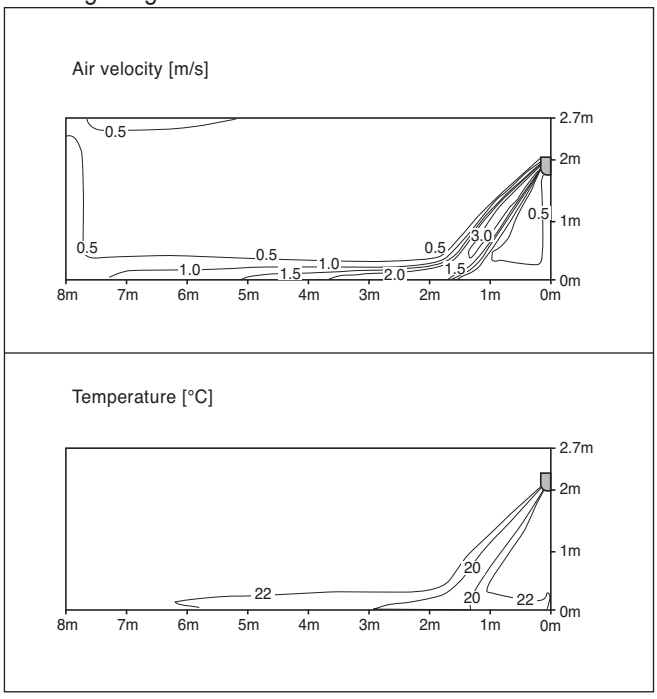

Heating

Discharge angle: 35°

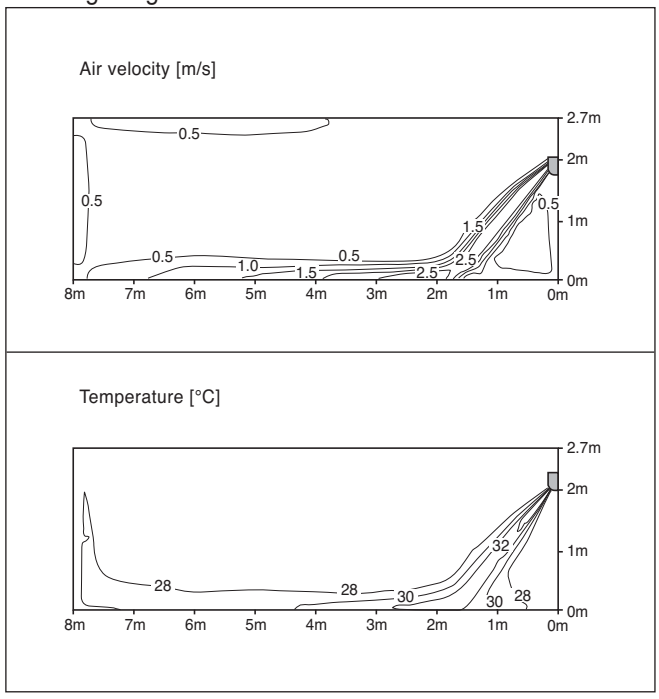

ARNU36GSVA4

Cooling

Discharge angle: 25°

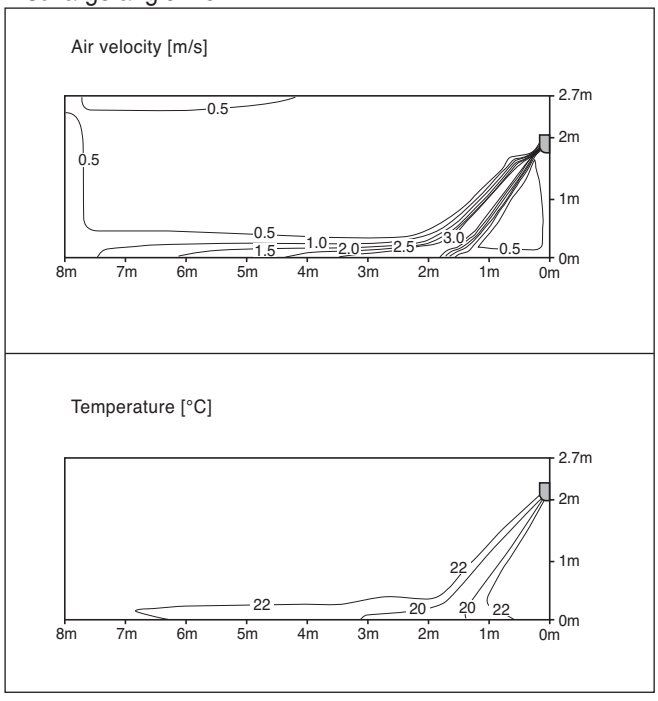

Heating

Discharge angle: 35°

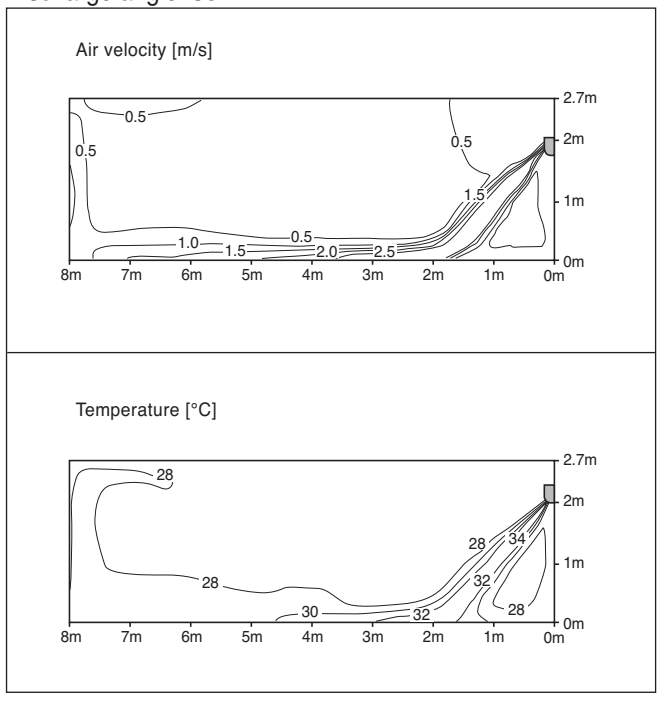

8. Electric Characteristics

Units					Power supply		IFM		Input	
Model	Type	Hz	Volts	Voltage range	MCA	MFA	kW	FLA	Cooling	Heating
ARNU05GSB*4	SB	50	220-240	Max: 264 Min:198	0.20	15	0.02	0.16	21.0	21.0
ARNU07GSB*4	SB				0.20	15	0.02	0.16	21.0	21.0
ARNU09GSB*4	SB				0.20	15	0.02	0.16	21.0	21.0
ARNU12GSB*4	SB				0.20	15	0.02	0.16	21.0	21.0
ARNU15GSB*4	SB				0.20	15	0.02	0.16	21.0	21.0
ARNU18GSC*4	SC				0.36	15	0.08	0.29	39.5	39.5
ARNU24GSC*4	SC				0.36	15	0.08	0.29	39.5	39.5
ARNU30GSVA4	SV				1.19	15	0.11	0.95	88.0	88.0
ARNU36GSVA4	SV				1.19	15	0.11	0.95	105.0	105.0
ARNU05GSB*4	SB	60	220	Max: 242 Min:198	0.20	15	0.02	0.16	21.0	21.0
ARNU07GSB*4	SB				0.20	15	0.02	0.16	21.0	21.0
ARNU09GSB*4	SB				0.20	15	0.02	0.16	21.0	21.0
ARNU12GSB*4	SB				0.20	15	0.02	0.16	21.0	21.0
ARNU15GSB*4	SB				0.20	15	0.02	0.16	21.0	21.0
ARNU18GSC*4	SC				0.36	15	0.08	0.29	39.5	39.5
ARNU24GSC*4	SC				0.36	15	0.08	0.29	39.5	39.5
ARNU30GSVA4	SV				1.19	15	0.11	0.95	67.0	67.0
ARNU36GSVA4	SV				1.19	15	0.11	0.95	104.0	104.0

Symbols:

MCA :Min, Circuit Amps(A)

MFA:Max. Fuse Amps(see note 5)

kW:Fan Motor Rated Output(kW)

FLA:Full Load Amps(A)

IFM:Indoor Fan Motor

Note :

1. Voltage range
   Units are suitable for use on electrical systems where voltage supplied to unit terminals is not below or above the listed range limits.
2. Maximum allowable voltage unbalance between phases is 2%
3. MCA/MFA
   MCA=1.25 x FLA
   MFA≤ 4 x FLA
   (Next lower standard fuse rating. Min. 15A)
4. Select wire size based on the MCA
5. Instead of fuse, use Circuit Breaker.

9. Sound Levels

9.1 Sound Pressure Levels

Overall

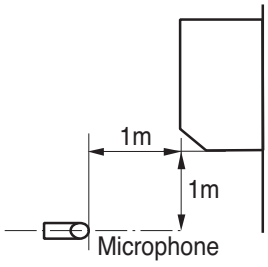

❉ Measuring place : Anechoic chamber

Notes:

1. Sound measured at 1.5m away from the center of the unit
2. Operating conditionl
   - Power source : 220-240V 50Hz / 220V 60Hz
   - Cooling : Indoor temperature (27°C DB, 19°C WB), Outdoor temperature (35°C DB, 24°C WB)
   - Heating : Indoor temperature (20°C DB, 15°C WB), Outdoor temperature (7°C DB, 6°C WB)
3. Reference accoustic pressure 0dB = 20μPa
4. Sound level will vary depending on a range of factors such as the construction(acoustic absorption coefficient) of particular room in which the equipment in installed.

Model	Sound Pressure Levels dB(A)		
	H	M	L
ARNU05GSB*4	30	29	28
ARNU07GSB*4	32	30	28
ARNU09GSB*4	34	32	28
ARNU12GSB*4	37	34	30
ARNU15GSB*4	40	36	32

Model	Sound Pressure Levels dB(A)		
	H	M	L
ARNU18GSC*4	38	35	33
ARNU24GSC*4	43	39	35
ARNU30GSVA4	49	44	42
ARNU36GSVA4	52	47	43

ARNU05GSB*4

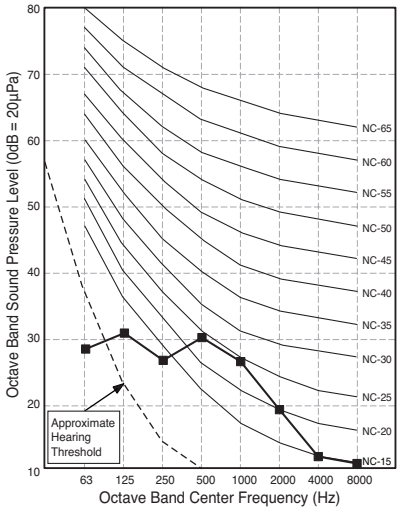

ARNU07GSB*4

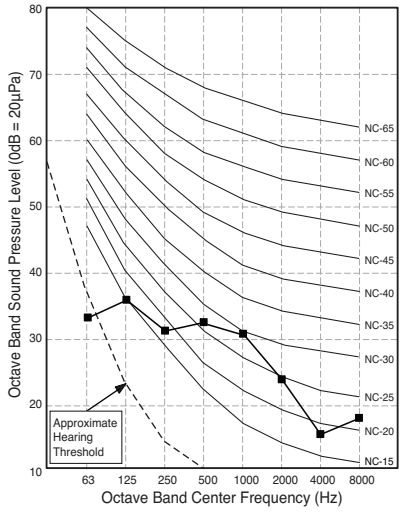

ARNU09GSB*4

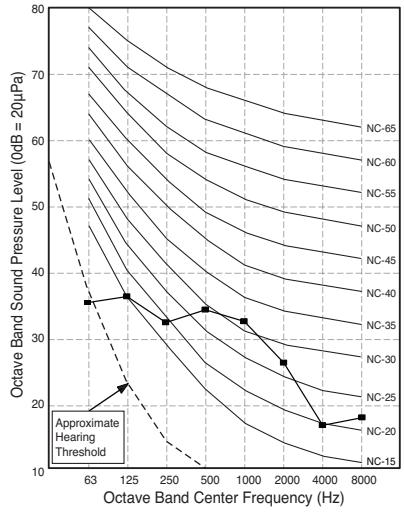

9. Sound Levels

ARNU12GSB*4

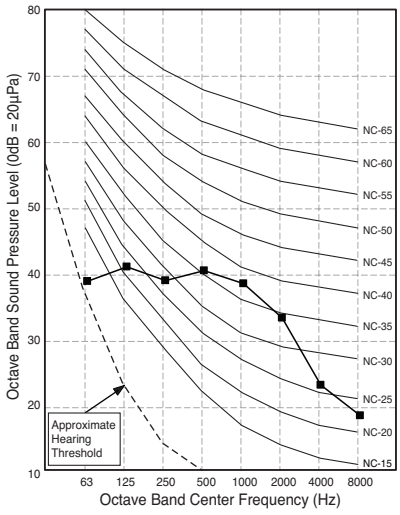

ARNU15GSB*4

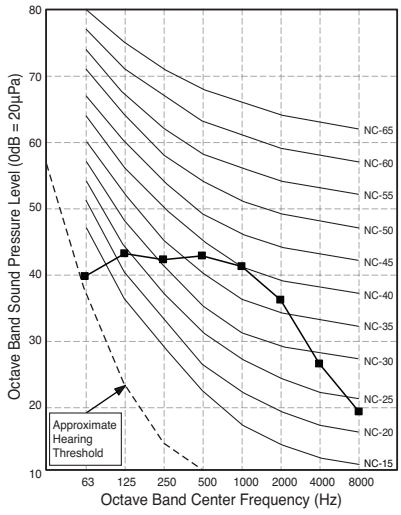

ARNU18GSC*4

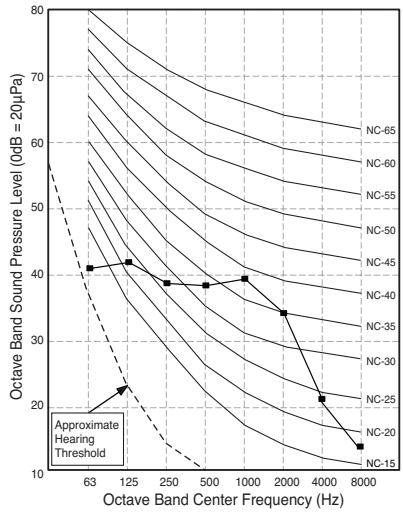

ARNU24GSC*4

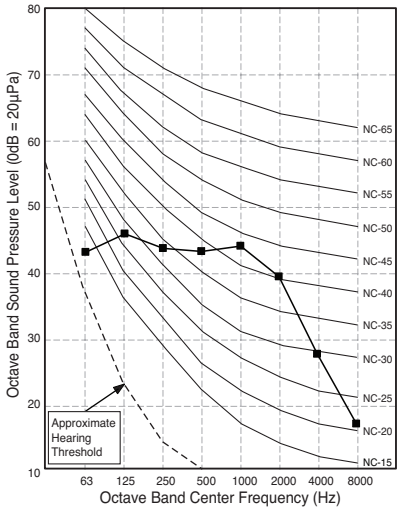

ARNU30GSVA4

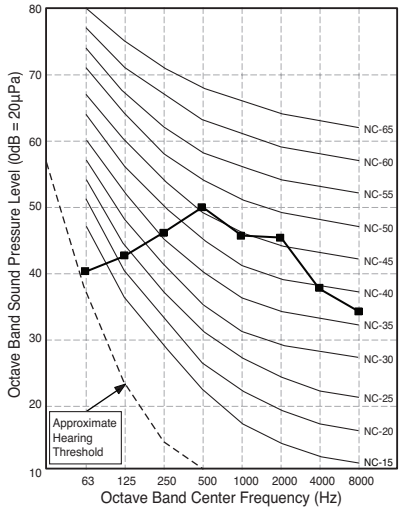

ARNU36GSVA4

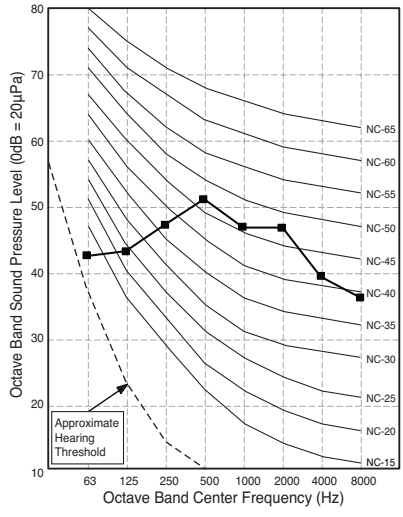

9. Sound Levels

9.2 Sound Power Levels

Model	Sound Power Levels dB(A)
	High Fan Speed
ARNU05GSB*4	54.0
ARNU07GSB*4	54.0
ARNU09GSB*4	55.0
ARNU12GSB*4	55.0
ARNU15GSB*4	58.0
ARNU18GSC*4	57.0
ARNU24GSC*4	62.0
ARNU30GSVA4	61.0
ARNU36GSVA4	63.0

Notes:
- Data is valid at diffuse field condition
- Data is valid at nominal operating condition
- Sound level can be increased in static pressure mode or used air guide.
- Sound power level is measured on the rated condition in the reverberation rooms.
- Sound level will vary depending on a range of factors such as the construction (acoustic absorption coefficient) of particular room in which the equipment in installed.
- Reference acoustic intensity 0dB = 10E-6μW/m²

ARNU05GSB*4

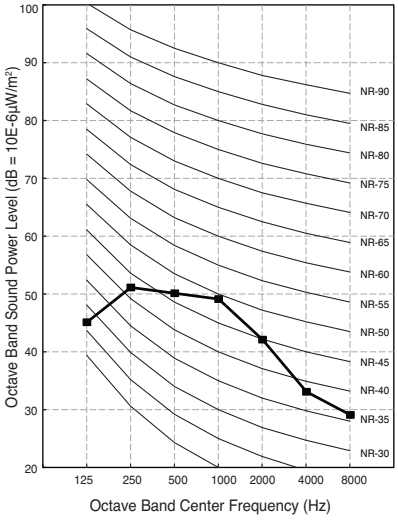

ARNU07GSB*4

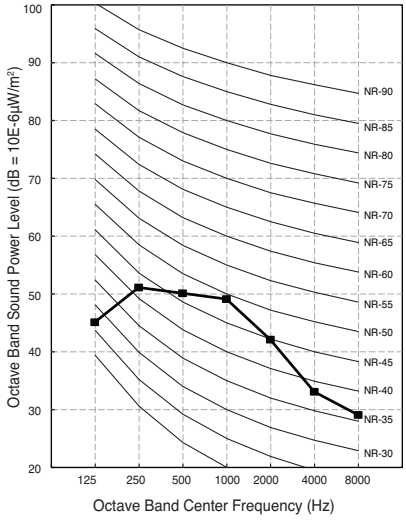

ARNU09GSB*4

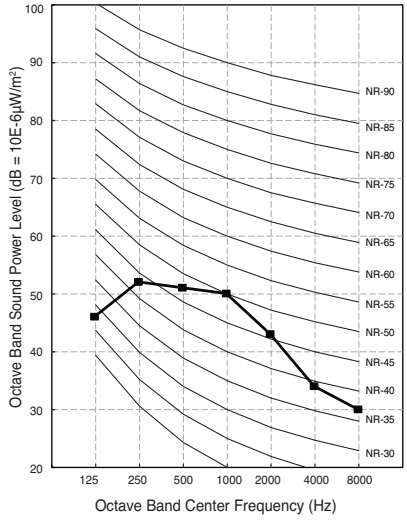

ARNU12GSB*4

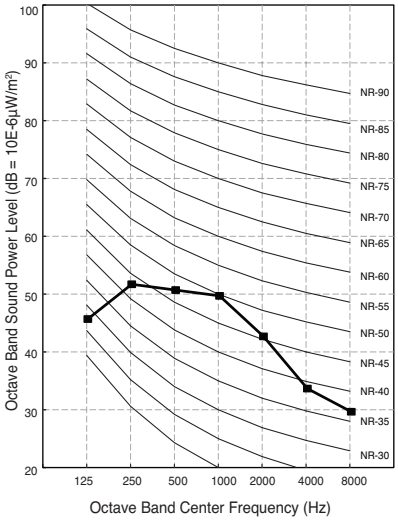

ARNU15GSB*4

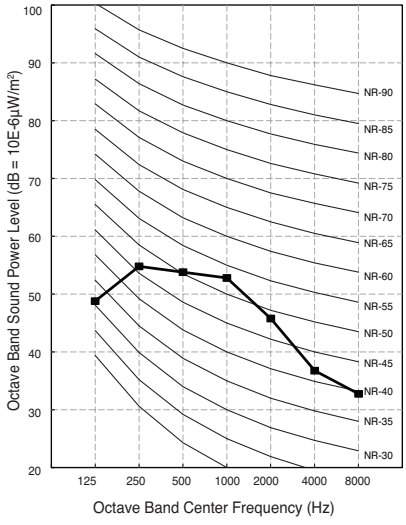

ARNU18GSC*4

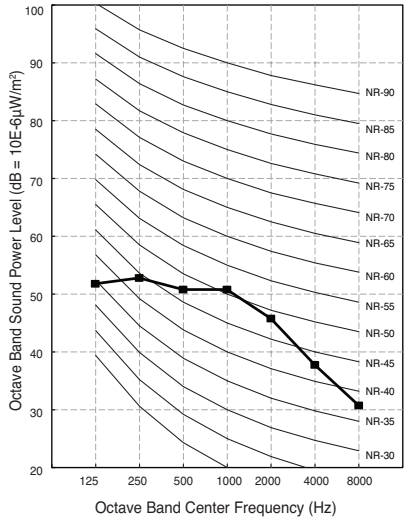

9. Sound Levels

ARNU24GSC*4

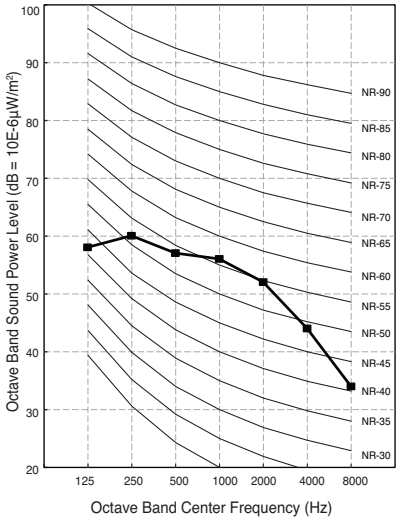

ARNU30GSVA4

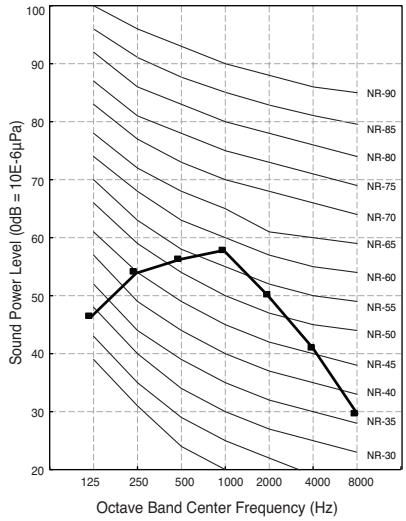

ARNU36GSVA4

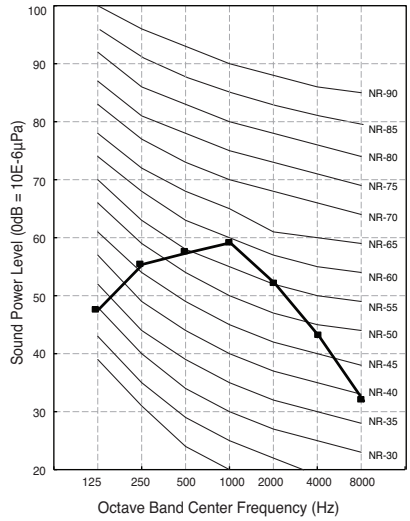

10. Installation

- Please read this instruction sheet completely before installing the product.
- When the power cord is damaged, replacement work shall be performed by authorized personnel only.
- Installation work must be performed in accordance with the national wiring standards by authorized personnel only.

Installation Parts Provided

1. Installation Plate

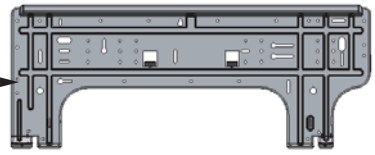

2. Type “A” screws



3. Type “B” screws

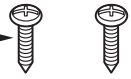

Required Parts

❏ Installation plate
❏ Five type "A" screws
❏ Two type “B” screws
❏ Connecting cable

❏ Pipes: Gas side
Liquid side
❏ Insulation materials
❏ Additional drain pipe

Required Tools

❏ Level gauge
❏ Screw driver
❏ Electric drill
❏ Hole core drill

❏ Flaring tool set
❏ Specified torque wrenches
❏ Spanner.....Half union

❏ A glass of water
❏ Screw driver

❏ Thermometer

10. Installation

10.1 Selection of the best location

- There should not be any heat or steam near the unit.
- Select a place where there are no obstacles around of the unit.
- Make sure that condensation drainage can be conveniently routed away.
- Do not install near a doorway.
- Ensure that the interval between a wall and the left (or right) of the unit is more than 100mm. The unit should be installed as high as possible on the wall, allowing a minimum of 120mm from ceiling.
- Use a metal detector to locate studs to prevent unnecessary damage to the wall.

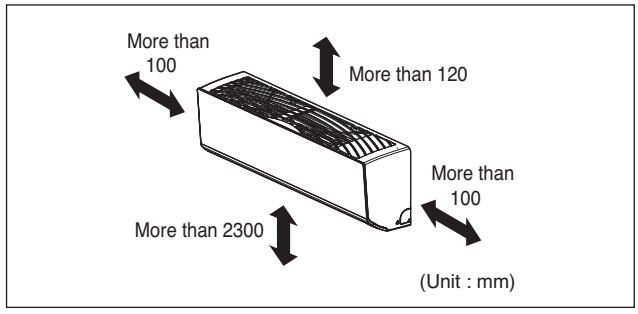

Fixing Installation Plate

The wall you select should be strong and solid enough to prevent vibration

- Mount the installation plate on the wall with type "A" screws. If mounting the unit on a concrete wall, use anchor bolts.
  - Mount the installation plate horizontally by aligning the centerline using Horizontal meter .
- Measure the wall and mark the centerline. It is also important to use caution concerning the location of the installation plate. Routing of the wiring to power outlets is through the walls typically. Drilling the hole through the wall for piping connections must be done safely.

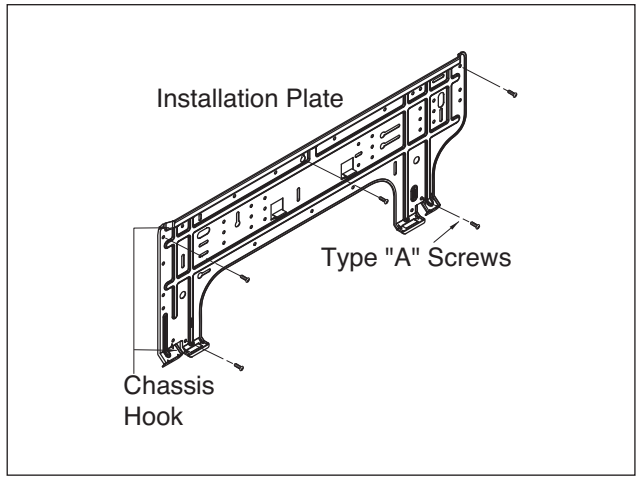

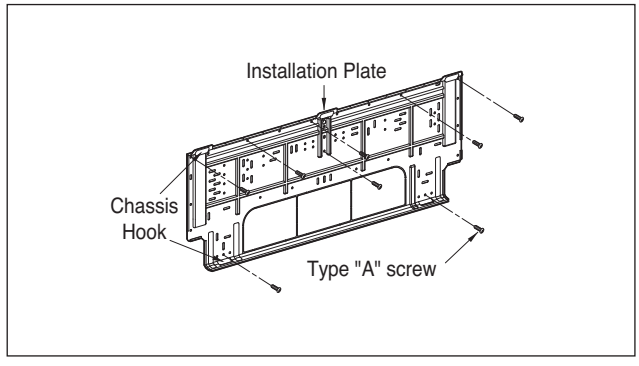

10. Installation

The lower left and the right side of Installation Plate

SB chassis

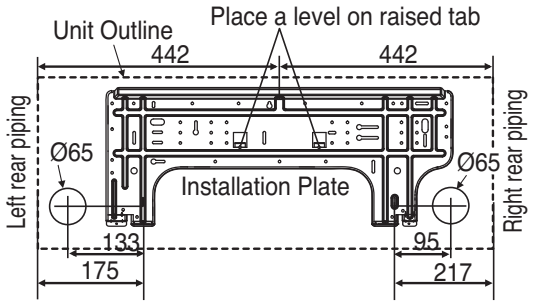

SC chassis

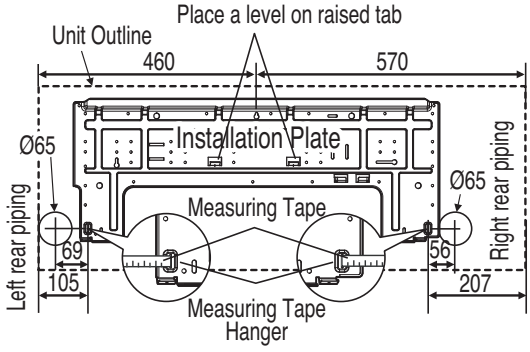

SV chassis

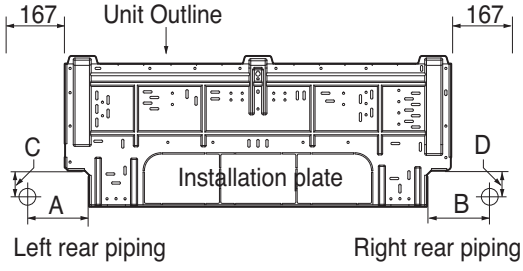

CHASSIS	Distance (mm)			
	A	B	C	D
SV	150	140	43	43

CAUTION : In case that the unit is installed near the sea, the installation parts may be corroded by salt. The installation parts (and the unit) should be taken appropriate anti-corrosion measures.

10.2 Connection of pipes and cables

10.2.1 Preparing work for installation

■ SB/SC chassis

1. Pull the screw cap at the bottom of the indoor unit
2. Remove the chassis cover from the unit by loosing 2 screws

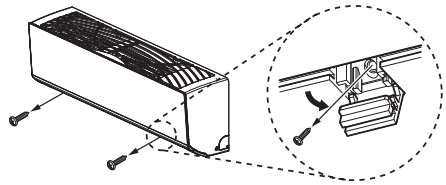

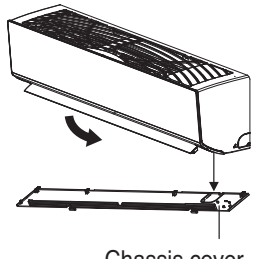

3. Pull back the tubing holder.
4. Remove pipe port cover and positioning the tubing

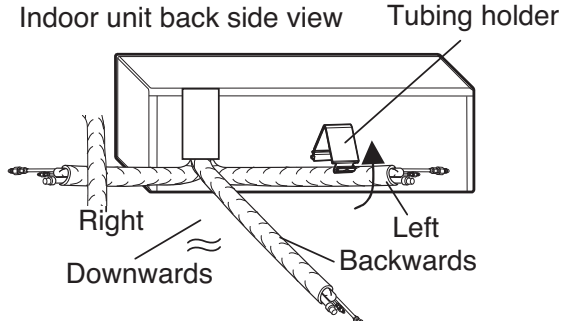

❊ The feature can be changed according to type of model.

10. Installation

■ SV chassis

1. Open the panel of the indoor unit.
2. Remove the chassis cover from the unit by loosing 5 screws.

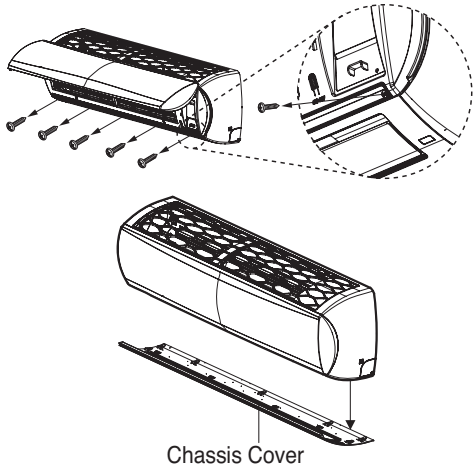

3. Pull back the tubing holder.
4. Remove the pipe port cover and position the piping.

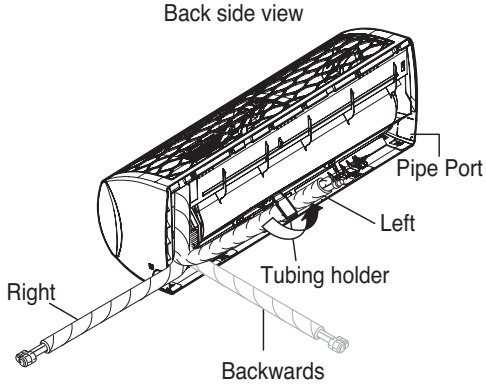

Good case

1. Press on the tubing cover and unfold the tubing to downward slowly. And then bend to the left side slowly.

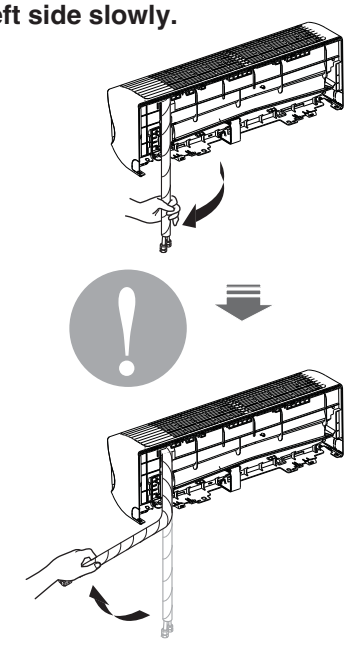

Bad case

1. Following bending case from right to left directly may cause damage to the tubing.

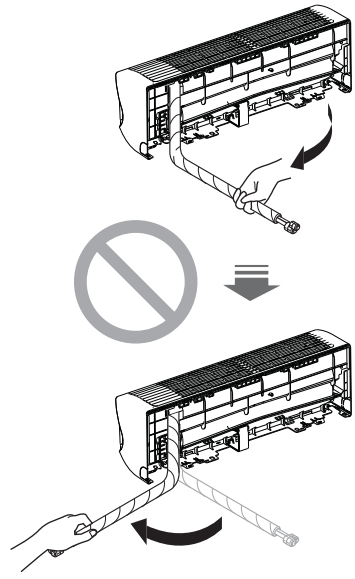

❊ The feature can be changed according to type of model.

⚠ CAUTION

Installation Information. For right piping. Follow the instruction above.

10.2.2 Installation of Indoor Unit

1. Hook the indoor unit onto the upper portion of the installation plate.(engage the three hooks at the top of the indoor unit with the upper edge of the installation plate) Ensure that the hooks are properly seated on the installation plate by moving it left and right

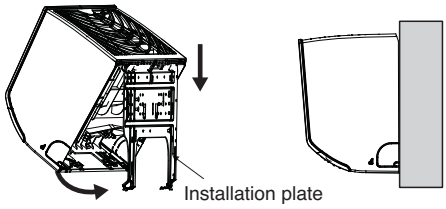

2. Unlock the tubing holder from the chassis and mount between the chassis and installation plate in order to separate the bottom side of the indoor unit from the wall.

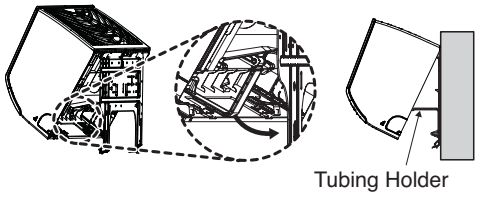

* The feature can be changed according to type of model.

Connecting the installation pipe and drain hose to the indoor unit.

1. Align the center of the pipes and sufficiently tighten the flare nut by hand

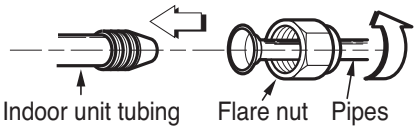

2. Tighten the flare nut with a wrench

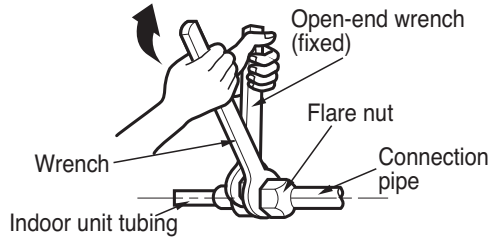

3. When needed to extend the drain hose of indoor unit, assembly the drain pipe as shown on the drawing

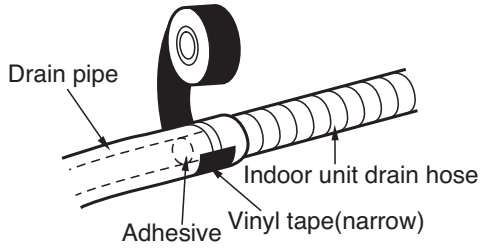

10. Installation

Connecting the cables

1. Insert the connecting cable through the bottom side of indoor unit and connect the cable (You can see detail contents in 'Connecting the cables' section)

<Left side piping>

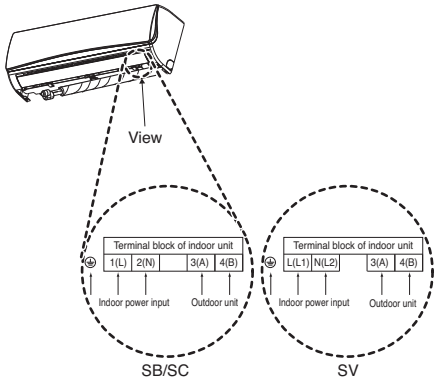

<Right side piping>

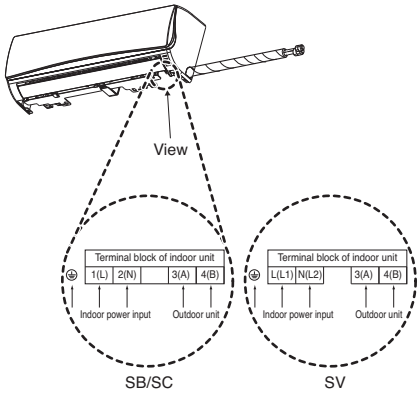

2. Secure the cable onto the control board with the cable retainer.

Wrap the insulation material around the connecting portion.

1. Overlap the connection pipe insulation material and the indoor unit pipe insulation material. Bind them together with vinyl tape so that there may be no gap.

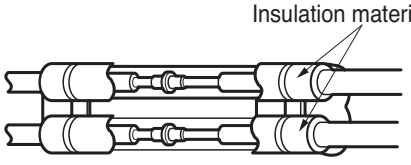

2. Set the tubing cutting line upward. Wrap the area which accommodates the rear piping housing section with vinyl tape.

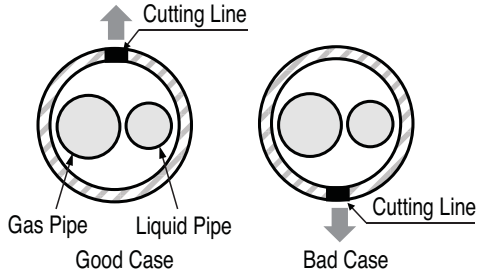

* Tubing cutting line have to be upward.

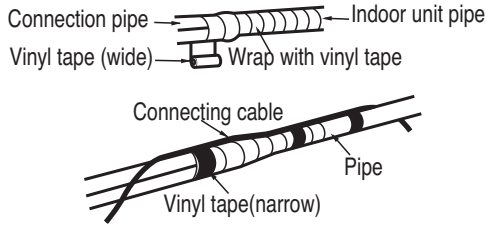

3. Bundle the piping and drain hose together by wrapping them with vinyl tape sufficient enough to cover where they fit into the rear piping housing section. Be sure that the drain hose is located at the lowest side of the bundle. Locating at the upper side can cause overflow from the drain pan through the inside of the unit.

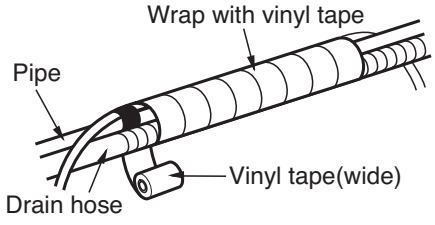

⚠ CAUTION

If the drain hose is routed inside the room insulate the hose with an insulation material* so that dripping from sweating condensation) will not damage furniture or floors.

* Foamed polyethylene or equivalent is recommended.

10.2.3 Finishing the indoor unit installation

1. Mount the tubing holder in the original positon.
2. Ensure that the hooks are properly seated on the installation plate by moving it left and right.
3. Press the lower left and right sides of the unit against the installation plate until the hooks engage into their slots (clicking sound).
4. Finish the assembly by screwing the unit to the installation plate by using two pieces of type "C" screws. And assemble a chassis cover. (SB/SC chassis) Recovery the chassis cover in Original place. (SV chassis)

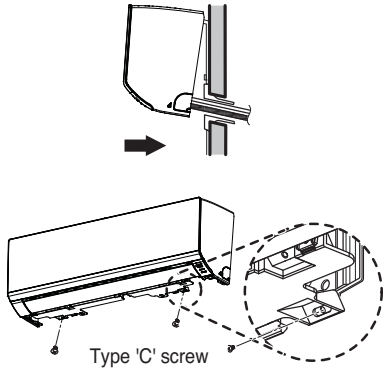

10.2.4 Checking the Drainage

To check the drainage.

1. Pour a glass of water on the evaporator.
2. Ensure the water flows through the drain hose of the indoor unit without any leakage and goes out the drain exit.

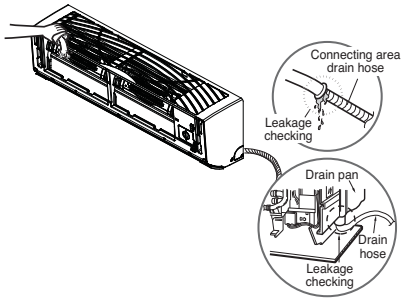

Drain piping

1. The drain hose should point downward for easy drain flow.

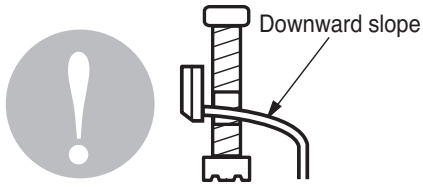

2. Do not make drain piping like the following.



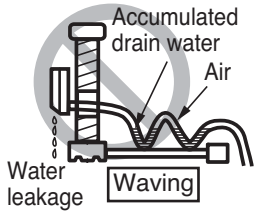

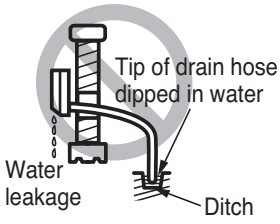

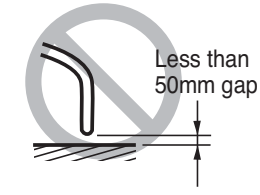

* The feature can be changed according to type of model.

10.3 Wiring the cable to the indoor units

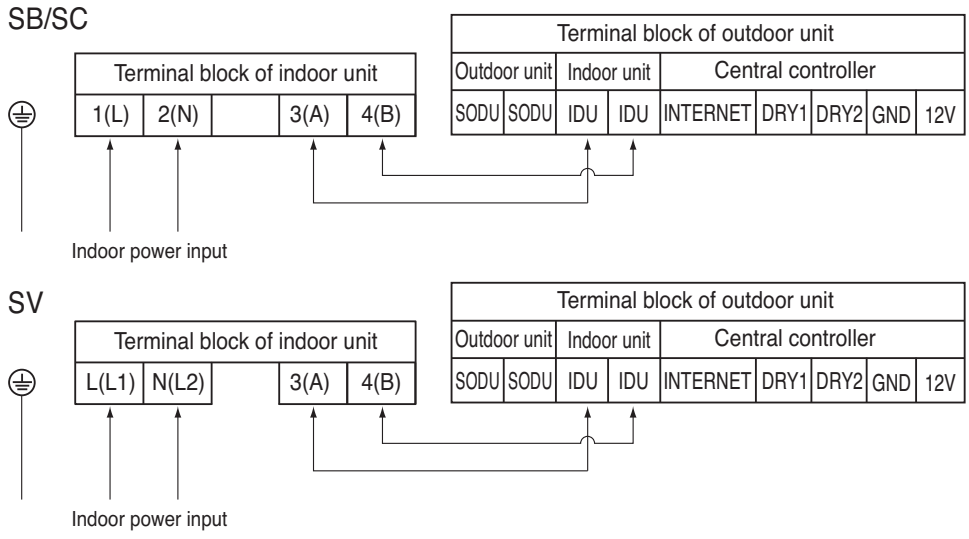

⚠ WARNING

Make sure that the screws of the terminal are free from looseness.

⚠ CAUTION

The Power cord connected to the unit should be selected according to the following specifications.

⚠ CAUTION

After the confirmation of the above conditions, prepare the wiring as follows:

1) Never fail to have separate power specially for the air conditioner. As for the method of wiring, follow the circuit diagram pasted on the inside of control box cover.
2) Provide a circuit breaker switch between power source and the unit.
3) The screw which fasten the wiring in the casing of electrical fittings are liable to come loose from vibrations to which the unit is subjected during the course of transportation. Check them and make sure that they are all tightly fastened. (If they are loose, it could give rise to burn-out of the wires.)
4) Confirm the Specification of power source
5) Confirm that electrical capacity is sufficient.
6) Be sure that the starting voltage is maintained at more than 90 percent of the rated voltage marked on the name plate.
7) Confirm that the cable thickness is as specified in the power sources specification.
   (Particularly note the relation between cable length and thickness.)
8) Do not install the leakage breaker in a place which is wet or moist.
   Water or moist may cause short circuit.
9) The following troubles would be caused by voltage drop-down.
   - Vibration of a magnetic switch, damage on the contact point there of, fuse breaking, disturbance to the normal function of a overload protection device.
   - Proper starting power is not given to the compressor.

WIRED REMOTE CONTROLLER INSTALLATION

• Since the room temperature sensor is in the remote controller, the remote controller box should be installed in a place away from direct sunlight, high humidity and direct supply of cold air to maintain proper space temperature.
Install the remote controller about 5ft(1.5m) above the floor in an area with good air circulation at an average temperature.

Do not install the remote controller where it can be affected by:

- Drafts, or dead spots behind doors and in corners.
- Hot or cold air from ducts.
- Radiant heat from sun or appliances.
- Concealed pipes and chimneys.
- Uncontrolled areas such as an outside wall behind the remote controller.
- This remote controller is equipped with a seven segment LED. display. For proper display of the remote controller LED's, the remote controller should be installed properly as shown in Fig.1.
(The standard height is 1.2~1.5 m from floor level.)

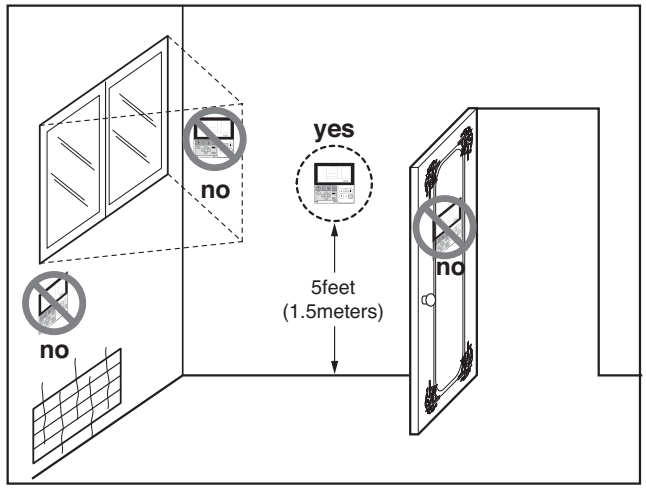

Fig.1 Typical locations for remote controller

11. Accessories

Standard Accessories

Name	Installation panel	Type "A" screws and plastic anchors	Type “C” screws	(Other)
Quantity	1 set	5 set	2 set	
Shape	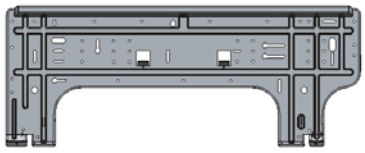		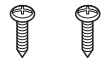	• Owner's manual • Installation manual

MULTI V™ Indoor unit

ARTCOOL (Mirror)

1. List of functions
2. Specifications
3. Dimensions
4. Piping Diagrams
5. Wiring Diagrams
6. Capacity Tables
7. Air Velocity and Temperature Distribution
8. Electric Characteristics
9. Sound Levels
10. Installation
11. Accessories

1. List of functions

Category	Function	ARNU05GSB*4, ARNU07GSB*4, ARNU09GSB*4, ARNU12GSB*4, ARNU15GSB*4, ARNU18GSC*4, ARNU24GSC*4
Air flow	Air supply outlet	1
	Airflow direction control(left & right)	Manual
	Airflow direction control(up & down)	Auto
	Auto swing(left & right)	-
	Auto swing(up & down)	Auto
	Airflow steps(fan/cool/heat)	3/4/3
	Chaos swing	O
	Chaos wind(auto wind)	-
	Jet cool(Power wind)	-
	Swirl wind	-
Air purifying	Deodorizing filter	O
	Plasma air purifier	O
	Prefilter(washable / anti-fungus)	O
Installation	Drain pump	-
	E.S.P. control	-
	Electric heater(operation)	-
	High ceiling operation	-
Reliability	Hot start	O
	Self diagnosis	O
	Soft dry operation	O
Convenience	Auto changeover	O(Heat recovery)
	Auto cleaning	O
	Auto operation(artificial intelligence)	O(Heat pump or Cooling only)
	Auto restart operation	-
	Child lock	O
	Forced operation	O
	Group control	O
	Sleep mode	O
	Timer(on/off)	O
	Timer(weekly)	O
	Two thermistor control	O
	External On/Off	O
Individual control	Wide wired remote controller (RS2)	PQRCVSL0/PQRCVSL0QW
	Wide wired remote controller (RS2 Plus)	PREMTB001/PREMTBB01
	Premium wired remote controller	PREMTA000/PREMTA000A/PREMTA000B
	Simple wired remote controller	PQRCVCL0Q(W)
	Wired remote controller(for hotel use)	PQRCHCA0Q(W)
	Wireless LCD remote control	PQWRH(C)Q0FDB
Special function kit	Zone control	-
	CTIE	-
	Electro thermostat	-
	Remote temperature sensor	-
	Group control wire	PZCWRCG3
	Dry contact	PDRYCB000/PDRYCB100/PDRYCB300/PDRYCB400/PDRYCB500

O : Applied X : Not applied – : No relation

Option : Model name & price are different according to options, and assembled in factory with main unit.

Accessory : Installed at field, ordered and purchased separately by the corresponding model name, supplied with separate package.

2. Specifications

* Model Name
R:Mirror, W:White, V:Silver

Type			ARTCOOL		
Model		Unit	ARNU05GSB*4	ARNU07GSB*4	ARNU09GSB*4
Cooling Capacity		kW	1.6	2.2	2.8
		kcal/h	1,400	1,900	2,400
		Btu/h	5,500	7,500	9,600
Heating Capacity		kW	1.8	2.5	3.2
		kcal/h	1,500	2,200	2,800
		Btu/h	6,100	8,500	10,900
Dimensions(WxHxD)	Body	mm	895 x 285 x 205	895 x 285 x 205	895 x 285 x 205
		inch	35-1/4 x 11-7/32 x 8-1/16	5-1/4 x 11-7/32 x 8-1/16	5-1/4 x 11-7/32 x 8-1/16
Coil	Rows x Columns x FPI		2 x 16 x 23	2 x 16 x 23	2 x 16 x 23
	Face Area	m^2	0.16	0.21	0.21
Fan	Type		Cross Flow Fan	Cross Flow Fan	Cross Flow Fan
	Motor Output x Number	W	20 x 1	20 x 1	20 x 1
	Running Current	A	0.16	0.16	0.16
	Air Flow Rate(H / M / L)	CMM	6.5 / 6.0 / 5.5	7.0 / 6.5 / 5.5	8.2 / 7.0 / 5.5
		CFM	230 / 212 / 194	247 / 230 / 194	290 / 247 / 194
	Drive		Direct	Direct	Direct
	Motor type		BLDC	BLDC	BLDC
Temperature Control			Microprocessor, Thermostat for cooling and heating	Microprocessor, Thermostat for cooling and heating	Microprocessor, Thermostat for cooling and heating
Sound Absorbing Thermal Insulation Material			Foamed polystrene	Foamed polystrene	Foamed polystrene
Air Filter			Resin Net(washable)	Resin Net(washable)	Resin Net(washable)
Safety Device			Fuse	Fuse	Fuse
Pipe Connections	Liquid Side	mm(inch)	Ø 6.35(1/4)	Ø6.35(1/4)	Ø6.35(1/4)
	Gas Side	mm(inch)	Ø 12.7(1/2)	Ø12.7(1/2)	Ø12.7(1/2)
	Drain Pipe(ID)	mm	16(5/8)	16 (5/8)	16 (5/8)
Net Weight		kg(lbs)	10.8 (23.8)	10.8 (23.8)	10.8 (23.8)
Noise Level(Sound Press, 1m, H / M / L)		dB(A)	30 / 29 / 28	32 / 30 / 28	34 / 32 / 28
Power Supply		Ø, V, Hz	1, 220-240, 50	1, 220-240, 50	1, 220-240, 50
			1, 220, 60	1, 220, 60	1, 220, 60
Refrigerant Control			EEV	EEV	EEV
Transmission cable		mm^2	1.0 ~ 1.5 x 2C	1.0 ~ 1.5 x 2C	1.0 ~ 1.5 x 2C
Color			R:Mirror, W:White, V:Silver		

Notes:

1. Capacities are based on the following conditions:
   - Cooling
     - Indoor temp. 27°C[80.6°F]DB/ 19°C[66.2°F]WB
     - Outdoor temp. 35°C[95°F]DB/ 24°C[75.2°F]WB
     - Interconnecting Piping Length 7.5m
     - Level Difference of Zero
   - Heating
     - Indoor temp. 20°C[68°F]DB/ 15°C[59°F]WB
     - Outdoor temp. 7°C[44.6°F]DB/ 6°C[42.8°F]WB
     - Interconnecting Piping Length 7.5m
     - Level Difference of Zero
2. Capacities are Net Capacities
3. Due to our policy of innovation some specifications may be changed without prior notification
4. Wiring cable size must comply with the applicable local and national codes. And “Electric characteristics” chapter should be considered for electrical work and design. Especially the power cable and circuit breaker should be selected in accordance with that.
5. EEV: Electronic Expansion Valve
6. Anechoic chamber conversion value is measured at 1.5 m downward from unit centre.
   The values depends on the ambient conditions and values are normally higher in actual operation.

Conversion Formula
kcal/h= kW x 860
Btu/h = kW x 3412
cfm = m^3/min x 35.3
l/s = CMM x 1000/60

2. Specifications

* Model Name
R:Mirror, W:White, V:Silver

Type			ARTCOOL	
Model		Unit	ARNU12GSB*4	ARNU15GSB*4
Cooling Capacity		kW	3.6	4.5
		kcal/h	3,100	3,900
		Btu/h	12,300	15,400
Heating Capacity		kW	4.0	5.0
		kcal/h	3,400	4,300
		Btu/h	13,600	17,100
Dimensions(WxHxD)	Body	mm	895 x 285 x 205	895 x 285 x 205
		inch	36-1/4 x 11-7/32 x 8-1/16	36-1/4 x 11-7/32 x 8-1/16
Coil	Rows x Columns x FPI		2 x 16 x 23	2 x 16 x 23
	Face Area	m^2	0.21	0.21
Fan	Type		Cross Flow Fan	Cross Flow Fan
	Motor Output x Number	W	20 x 1	20 x 1
	Running Current	A	0.16	0.16
	Air Flow Rate(H / M / L)	CMM	9.5 / 8.2 / 6.5	10.5 / 9.0 / 7.0
		CFM	336 / 290 / 230	371 / 318 / 247
	Drive		Direct	Direct
	Motor type		BLDC	BLDC
Temperature Control			Microprocessor, Thermostat for cooling and heating	Microprocessor, Thermostat for cooling and heating
Sound Absorbing Thermal Insulation Material			Foamed polystrene	Foamed polystrene
Air Filter			Resin Net(washable)	Resin Net(washable)
Safety Device			Fuse	Fuse
Pipe Connections	Liquid Side	mm(inch)	Ø6.35(1/4)	Ø6.35(1/4)
	Gas Side	mm(inch)	Ø12.7(1/2)	Ø12.7(1/2)
	Drain Pipe(ID)	mm	16 (5/8)	16 (5/8)
Net Weight		kg(lbs)	10.8 (23.8)	10.8 (23.8)
Noise Level(Sound Press, 1m, H / M / L)		dB(A)	37 / 34 / 30	42 / 39 / 32
Power Supply		Ø, V, Hz	1, 220-240, 50	1, 220-240, 50
			1, 220, 60	1, 220, 60
Refrigerant Control			EEV	EEV
Transmission cable		mm^2	1.0 ~ 1.5 x 2C	1.0 ~ 1.5 x 2C
Color			R:Mirror, W:White, V:Silver	

Notes:

1. Capacities are based on the following conditions:
   - Cooling
     - Indoor temp. 27°C[80.6°F]DB/ 19°C[66.2°F]WB
     - Outdoor temp. 35°C[95°F]DB/ 24°C[75.2°F]WB
     - Interconnecting Piping Length 7.5m
     - Level Difference of Zero
   - Heating
     - Indoor temp. 20°C[68°F]DB/ 15°C[59°F]WB
     - Outdoor temp. 7°C[44.6°F]DB/ 6°C[42.8°F]WB
     - Interconnecting Piping Length 7.5m
     - Level Difference of Zero
2. Capacities are Net Capacities
3. Due to our policy of innovation some specifications may be changed without prior notification
4. Wiring cable size must comply with the applicable local and national codes. And “Electric characteristics” chapter should be considered for electrical work and design. Especially the power cable and circuit breaker should be selected in accordance with that.
5. EEV: Electronic Expansion Valve
6. Anechoic chamber conversion value is measured at 1.5 m downward from unit centre.
   The values depends on the ambient conditions and values are normally higher in actual operation.

Conversion Formula
kcal/h= kW x 860
Btu/h = kW x 3412
cfm = m^3/min x 35.3
l/s = CMM x 1000/60

2. Specifications

* Model Name
R:Mirror, W:White, V:Silver

Type			ARTCOOL	
Model		Unit	ARNU18GSC*4	ARNU24GSC*4
Cooling Capacity		kW	5.6	7.1
		kcal/h	4,800	6,100
		Btu/h	19,100	24,200
Heating Capacity		kW	6.3	8.0
		kcal/h	5,400	6,900
		Btu/h	21,500	27,300
Dimensions(WxHxD)	Body	mm	1,030 x 325 x 245	1,030 x 325 x 245
		inch	40-9/16 x 12-25/32 x 9-21/32	40-9/16 x 12-25/32 x 9-21/32
Coil	Rows x Columns x FPI		2 x 18 x 22 + 1 x 4 x 21	2 x 18 x 22 + 1 x 4 x 21
	Face Area	m^2	0.28	0.28
Fan	Type		Cross Flow Fan	Cross Flow Fan
	Motor Output x Number	W	76 x 1	76 x 1
	Running Current	A	0.29	0.29
	Air Flow Rate(H / M / L)	CMM	12.5 / 12.0 / 11.3	14.0 / 12.7 / 11.5
		CFM	441 / 424 / 399	494 / 449 / 406
	Drive		Direct	Direct
	Motor type		BLDC	BLDC
Temperature Control			Microprocessor, Thermostat for cooling and heating	Microprocessor, Thermostat for cooling and heating
Sound Absorbing Thermal Insulation Material			Foamed polystrene	Foamed polystrene
Air Filter			Resin Net(washable)	Resin Net(washable)
Safety Device			Fuse	Fuse
Pipe Connections	Liquid Side	mm(inch)	Ø6.35(1/4)	Ø9.52(3/8)
	Gas Side	mm(inch)	Ø12.7(1/2)	Ø15.88(5/8)
	Drain Pipe(ID)	mm	16 (5/8)	16 (5/8)
Net Weight		kg(lbs)	15.4 (34.0)	15.4 (34.0)
Noise Level(Sound Press, 1m, H / M / L)		dB(A)	38 / 35 / 33	43 / 39 / 35
Power Supply		Ø, V, Hz	1, 220-240, 50	1, 220-240, 50
			1, 220, 60	1, 220, 60
Refrigerant Control			EEV	EEV
Transmission cable		mm^2	1.0 ~ 1.5 x 2C	1.0 ~ 1.5 x 2C
Color			R:Mirror, W:White, V:Silver	

Notes:

1. Capacities are based on the following conditions:
   - Cooling
     - Indoor temp. 27°C[80.6°F]DB/ 19°C[66.2°F]WB
     - Outdoor temp. 35°C[95°F]DB/ 24°C[75.2°F]WB
     - Interconnecting Piping Length 7.5m
     - Level Difference of Zero
   - Heating
     - Indoor temp. 20°C[68°F]DB/ 15°C[59°F]WB
     - Outdoor temp. 7°C[44.6°F]DB/ 6°C[42.8°F]WB
     - Interconnecting Piping Length 7.5m
     - Level Difference of Zero
2. Capacities are Net Capacities
3. Due to our policy of innovation some specifications may be changed without prior notification
4. Wiring cable size must comply with the applicable local and national codes. And “Electric characteristics” chapter should be considered for electrical work and design. Especially the power cable and circuit breaker should be selected in accordance with that.
5. EEV: Electronic Expansion Valve
6. Anechoic chamber conversion value is measured at 1.5 m downward from unit centre.
   The values depends on the ambient conditions and values are normally higher in actual operation.

Conversion Formula
kcal/h= kW x 860
Btu/h = kW x 3412
cfm = m^3/min x 35.3
l/s = CMM x 1000/60

ARTCOOL

ARNU05GSB*4 ARNU12GSB*4
ARNU07GSB*4 ARNU15GSB*4
ARNU09GSB*4

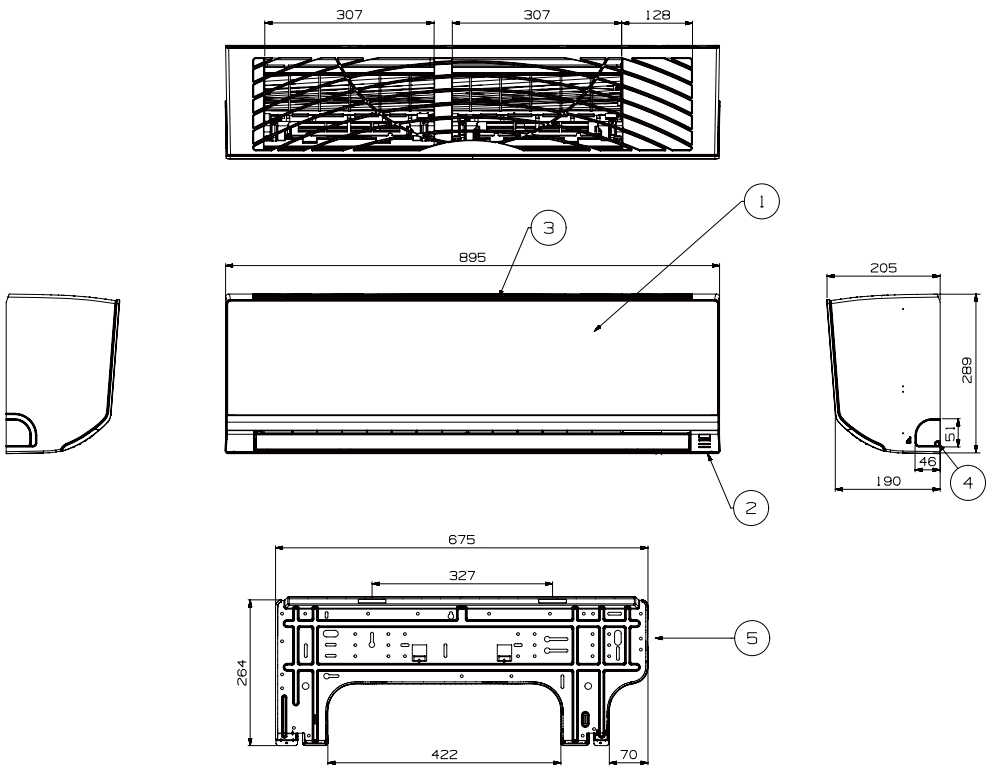

No.	Part Name	Remark
1	Front panel	
2	Display & signal receiver	
3	Air suction grille	
4	Knockout hole	
5	Installation plate	

▣ Note

1. Unit should be installed in compliance with the installation manual in the product box.
2. Unit shall be grounded in accordance with the local regulations or applicable national codes.
3. The Unit is powered from the outdoor unit. Therefore power cable should be connected with the outdoor unit.

LG Electronics

CHASSIS CODE: SB

ARTCOOL
ARNU18GSC*4 ARNU24GSC*4

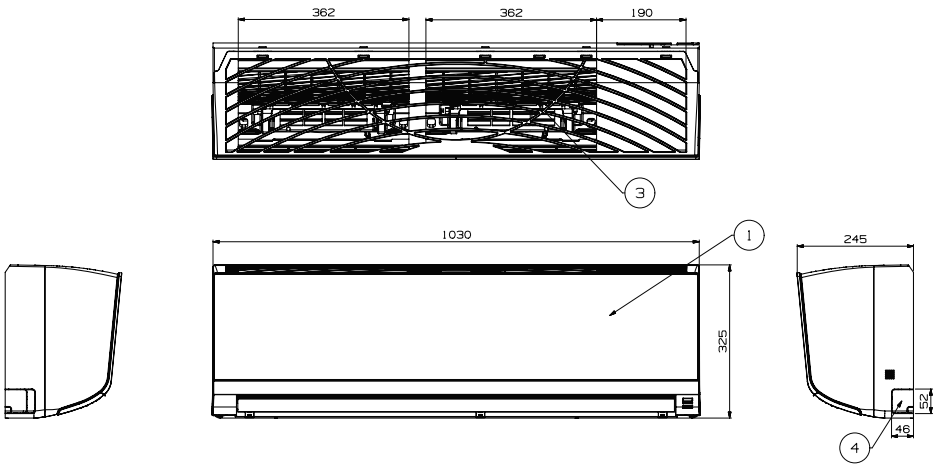

No.	Part Name	Remark
1	Front panel	
2	Display & signal receiver	
3	Air suction grille	
4	Knockout hole	
5	Installation plate	

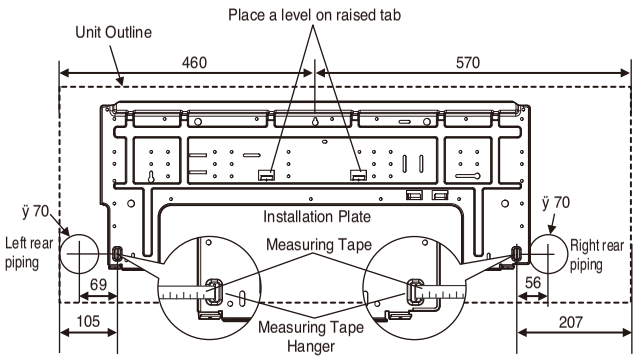

[Unit : mm]

▣ Note

1. Unit should be installed in compliance with the installation manual in the product box.
2. Unit shall be grounded in accordance with the local regulations or applicable national codes.
3. The Unit is powered from the outdoor unit. Therefore power cable should be connected with the outdoor unit.

4. Piping Diagrams

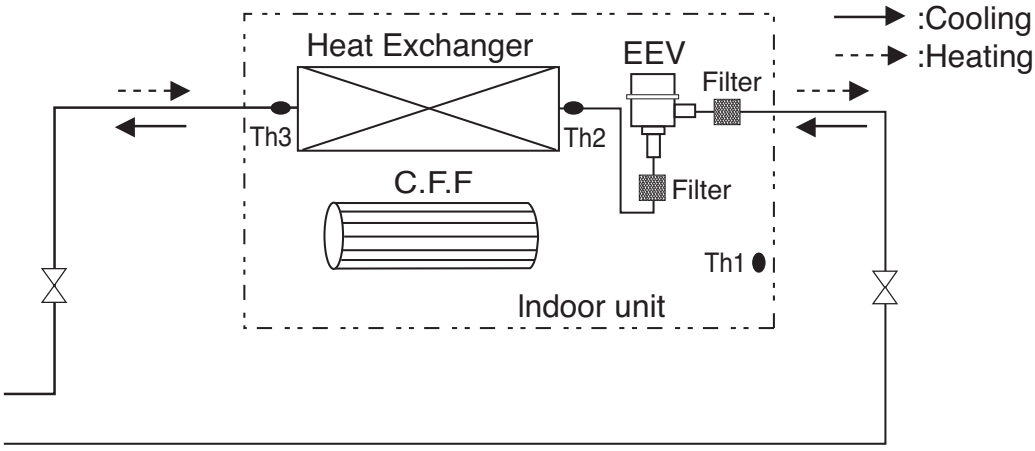

Refrigerant pipe connection port diameter

[Unit: mm(inch)]

MODEL	GAS	LIQUID
ARNU05GSB*4	Ø12.7(1/2)	Ø6.35(1/4)
ARNU07GSB*4	Ø12.7(1/2)	Ø6.35(1/4)
ARNU09GSB*4	Ø12.7(1/2)	Ø6.35(1/4)
ARNU12GSB*4	Ø12.7(1/2)	Ø6.35(1/4)
ARNU15GSB*4	Ø12.7(1/2)	Ø6.35(1/4)
ARNU18GSC*4	Ø12.7(1/2)	Ø6.35(1/4)
ARNU24GSC*4	Ø15.88(5/8)	Ø9.52(3/8)

Loc	Description	PCB Connector (Color)
Th1	Thermistor for suction air temperature	CN-TH1 (White)
Th2	Thermistor for evaporator inlet temperature	
Th3	Thermistor for evaporator outlet temperature	CN-TH2 (Red)

5. Wiring Diagrams

SB/SC Chassis

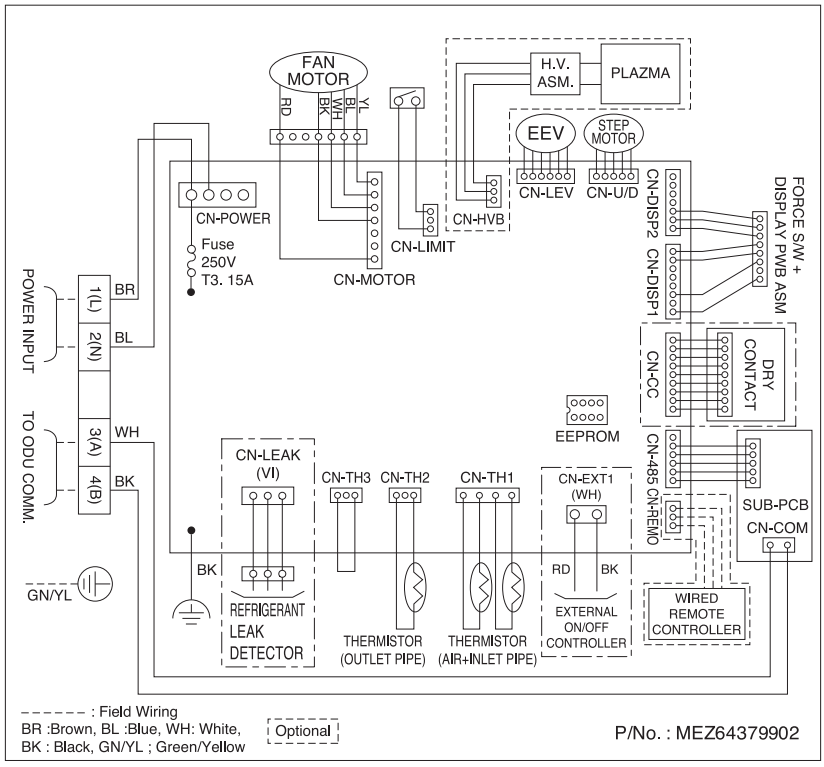

CONNECTOR NUMBER	LOCATION POINT	FUNCTION
CN-POWER	AC Power supply	AC Power line input for indoor
CN-MOTOR	Fan motor output	Motor output of BLDC
CN-485	Communication	Connection between indoor
CN-DISP1	Display	Display of indoor status
CN-DISP2	Display	Display of indoor status
CN-LEV	EEV output	EEV control output
CN-U/D	Step motor	Step motor output
CN-TH1	Room/inlet pipe sensor	Room and inlet pipe thermistor
CN-TH2	Outlet pipe sensor	Outlet pipe thermistor
CN-REMO	Remote controller	Remote control line
CN-CC	Dry contact	Dry contact line
CN-HVB	Air clean	Air clean control
CN-EXT	External On/Off	External On/Off signal input
CN-LEAK	Refrigerant leak detector	Refrigerant leak detector line

6. Capacity Tables

6.1 Cooling Capacity

Cooling Capacity

Capacity Index	Outdoor air temp. (DB, °C)	Indoor air temp. (DB/WB, °C)													
		20		23		26		27		28		30		32	
		14		16		18		19		20		22		24	
		TC	SHC	TC	SHC	TC	SHC	TC	SHC	TC	SHC	TC	SHC	TC	SHC
		kW	kW	kW	kW	kW	kW	kW	kW	kW	kW	kW	kW	kW	kW
1.6	10	1.1	1.0	1.3	1.0	1.5	1.1	1.6	1.2	1.7	1.2	1.9	1.3	2.1	1.2
	12	1.1	1.0	1.3	1.0	1.5	1.1	1.6	1.2	1.7	1.2	1.9	1.3	2.1	1.2
	14	1.1	1.0	1.3	1.0	1.5	1.1	1.6	1.2	1.7	1.2	1.9	1.3	2.1	1.2
	16	1.1	1.0	1.3	1.0	1.5	1.1	1.6	1.2	1.7	1.2	1.9	1.3	2.0	1.2
	18	1.1	1.0	1.3	1.0	1.5	1.1	1.6	1.2	1.7	1.2	1.9	1.3	2.0	1.2
	20	1.1	1.0	1.3	1.0	1.5	1.1	1.6	1.2	1.7	1.2	1.9	1.3	2.0	1.2
	21	1.1	1.0	1.3	1.0	1.5	1.1	1.6	1.2	1.7	1.2	1.9	1.3	2.0	1.2
	23	1.1	1.0	1.3	1.0	1.5	1.1	1.6	1.2	1.7	1.2	1.9	1.3	1.9	1.1
	25	1.1	1.0	1.3	1.0	1.5	1.1	1.6	1.2	1.7	1.2	1.9	1.2	1.9	1.1
	27	1.1	1.0	1.3	1.0	1.5	1.1	1.6	1.2	1.7	1.2	1.8	1.2	1.9	1.1
	29	1.1	1.0	1.3	1.0	1.5	1.1	1.6	1.2	1.7	1.2	1.8	1.2	1.8	1.1
	31	1.1	1.0	1.3	1.0	1.5	1.1	1.6	1.2	1.7	1.2	1.8	1.2	1.8	1.1
	33	1.1	1.0	1.3	1.0	1.5	1.1	1.6	1.2	1.7	1.2	1.8	1.2	1.8	1.0
	35	1.1	1.0	1.3	1.0	1.5	1.1	1.6	1.2	1.7	1.2	1.7	1.1	1.8	1.0
	37	1.1	1.0	1.3	1.0	1.5	1.1	1.6	1.2	1.7	1.2	1.7	1.1	1.7	1.0
	39	1.1	1.0	1.3	1.0	1.5	1.1	1.6	1.2	1.6	1.1	1.7	1.1	1.7	1.0
2.2	10	1.5	1.3	1.8	1.4	2.0	1.6	2.2	1.6	2.4	1.7	2.6	1.7	2.9	1.7
	12	1.5	1.3	1.8	1.4	2.0	1.6	2.2	1.6	2.4	1.7	2.6	1.7	2.9	1.7
	14	1.5	1.3	1.8	1.4	2.0	1.6	2.2	1.6	2.4	1.7	2.6	1.7	2.8	1.7
	16	1.5	1.3	1.8	1.4	2.0	1.6	2.2	1.6	2.4	1.7	2.6	1.7	2.8	1.6
	18	1.5	1.3	1.8	1.4	2.0	1.6	2.2	1.6	2.4	1.7	2.6	1.7	2.7	1.6
	20	1.5	1.3	1.8	1.4	2.0	1.6	2.2	1.6	2.4	1.7	2.6	1.7	2.7	1.6
	21	1.5	1.3	1.8	1.4	2.0	1.6	2.2	1.6	2.4	1.7	2.6	1.7	2.7	1.6
	23	1.5	1.3	1.8	1.4	2.0	1.6	2.2	1.6	2.4	1.7	2.6	1.7	2.6	1.6
	25	1.5	1.3	1.8	1.4	2.0	1.6	2.2	1.6	2.4	1.7	2.6	1.7	2.6	1.5
	27	1.5	1.3	1.8	1.4	2.0	1.6	2.2	1.6	2.4	1.7	2.5	1.7	2.6	1.5
	29	1.5	1.3	1.8	1.4	2.0	1.6	2.2	1.6	2.4	1.7	2.5	1.6	2.5	1.5
	31	1.5	1.3	1.8	1.4	2.0	1.6	2.2	1.6	2.4	1.7	2.5	1.6	2.5	1.5
	33	1.5	1.3	1.8	1.4	2.0	1.6	2.2	1.6	2.4	1.7	2.4	1.6	2.4	1.4
	35	1.5	1.3	1.8	1.4	2.0	1.6	2.2	1.6	2.4	1.7	2.4	1.6	2.4	1.4
	37	1.5	1.3	1.8	1.4	2.0	1.6	2.2	1.6	2.3	1.6	2.3	1.5	2.4	1.4
	39	1.5	1.3	1.8	1.4	2.0	1.6	2.2	1.6	2.2	1.6	2.3	1.5	2.4	1.4
2.8	10	1.9	1.6	2.2	1.7	2.6	1.9	2.8	1.9	3.0	2.0	3.4	2.1	3.7	2.0
	12	1.9	1.6	2.2	1.7	2.6	1.9	2.8	1.9	3.0	2.0	3.4	2.1	3.6	2.0
	14	1.9	1.6	2.2	1.7	2.6	1.9	2.8	1.9	3.0	2.0	3.4	2.1	3.6	2.0
	16	1.9	1.6	2.2	1.7	2.6	1.9	2.8	1.9	3.0	2.0	3.4	2.1	3.5	2.0
	18	1.9	1.6	2.2	1.7	2.6	1.9	2.8	1.9	3.0	2.0	3.4	2.1	3.5	2.0
	20	1.9	1.6	2.2	1.7	2.6	1.9	2.8	1.9	3.0	2.0	3.4	2.1	3.4	1.9
	21	1.9	1.6	2.2	1.7	2.6	1.9	2.8	1.9	3.0	2.0	3.4	2.1	3.4	1.9
	23	1.9	1.6	2.2	1.7	2.6	1.9	2.8	1.9	3.0	2.0	3.4	2.1	3.4	1.9
	25	1.9	1.6	2.2	1.7	2.6	1.9	2.8	1.9	3.0	2.0	3.3	2.0	3.3	1.9
	27	1.9	1.6	2.2	1.7	2.6	1.9	2.8	1.9	3.0	2.0	3.2	2.0	3.3	1.9
	29	1.9	1.6	2.2	1.7	2.6	1.9	2.8	1.9	3.0	2.0	3.2	2.0	3.2	1.8
	31	1.9	1.6	2.2	1.7	2.6	1.9	2.8	1.9	3.0	2.0	3.2	1.9	3.2	1.8
	33	1.9	1.6	2.2	1.7	2.6	1.9	2.8	1.9	3.0	2.0	3.1	1.9	3.1	1.7
	35	1.9	1.6	2.2	1.7	2.6	1.9	2.8	1.9	3.0	2.0	3.0	1.9	3.1	1.7
	37	1.9	1.6	2.2	1.7	2.6	1.9	2.8	1.9	2.9	1.9	3.0	1.9	3.0	1.7
	39	1.9	1.6	2.2	1.7	2.6	1.9	2.8	1.9	2.8	1.9	2.9	1.8	3.0	1.7

Notes:

TC: Total Capacity(kW)

SHC: Sensible Heat Capacity(kW)

1. Capacity tables show the representative value of conditions which may occur.
2. Refer to Capacity Correction Factor in the outdoor unit PDB for the actual performance data of each indoor unit and outdoor unit combination.

6. Capacity Tables

Cooling Capacity

Capacity Index	Outdoor air temp. (DB, °C)	Indoor air temp. (DB/WB, °C)													
		20		23		26		27		28		30		32	
		14		16		18		19		20		22		24	
		TC	SHC	TC	SHC	TC	SHC	TC	SHC	TC	SHC	TC	SHC	TC	SHC
		kW	kW	kW	kW	kW	kW	kW	kW	kW	kW	kW	kW	kW	kW
3.6	10	2.4	2.0	2.9	2.2	3.3	2.4	3.6	2.4	3.9	2.5	4.3	2.6	4.7	2.6
	12	2.4	2.0	2.9	2.2	3.3	2.4	3.6	2.4	3.9	2.5	4.3	2.6	4.7	2.6
	14	2.4	2.0	2.9	2.2	3.3	2.4	3.6	2.4	3.9	2.5	4.3	2.6	4.6	2.5
	16	2.4	2.0	2.9	2.2	3.3	2.4	3.6	2.4	3.9	2.5	4.3	2.6	4.6	2.5
	18	2.4	2.0	2.9	2.2	3.3	2.4	3.6	2.4	3.9	2.5	4.3	2.6	4.5	2.5
	20	2.4	2.0	2.9	2.2	3.3	2.4	3.6	2.4	3.9	2.5	4.3	2.6	4.4	2.4
	21	2.4	2.0	2.9	2.2	3.3	2.4	3.6	2.4	3.9	2.5	4.3	2.6	4.4	2.4
	23	2.4	2.0	2.9	2.2	3.3	2.4	3.6	2.4	3.9	2.5	4.3	2.6	4.3	2.4
	25	2.4	2.0	2.9	2.2	3.3	2.4	3.6	2.4	3.9	2.5	4.3	2.6	4.3	2.4
	27	2.4	2.0	2.9	2.2	3.3	2.4	3.6	2.4	3.9	2.5	4.2	2.5	4.2	2.4
	29	2.4	2.0	2.9	2.2	3.3	2.4	3.6	2.4	3.9	2.5	4.1	2.5	4.2	2.3
	31	2.4	2.0	2.9	2.2	3.3	2.4	3.6	2.4	3.9	2.5	4.1	2.4	4.1	2.3
	33	2.4	2.0	2.9	2.2	3.3	2.4	3.6	2.4	3.9	2.5	4.0	2.4	4.0	2.2
	35	2.4	2.0	2.9	2.2	3.3	2.4	3.6	2.4	3.9	2.5	3.9	2.4	4.0	2.2
	37	2.4	2.0	2.9	2.2	3.3	2.4	3.6	2.4	3.8	2.4	3.8	2.4	3.9	2.2
	39	2.4	2.0	2.9	2.2	3.3	2.4	3.6	2.4	3.7	2.4	3.8	2.3	3.9	2.1
4.5	10	3.0	2.6	3.6	2.8	4.2	3.0	4.5	3.1	4.8	3.2	5.4	3.3	5.9	3.3
	12	3.0	2.6	3.6	2.8	4.2	3.0	4.5	3.1	4.8	3.2	5.4	3.3	5.8	3.3
	14	3.0	2.6	3.6	2.8	4.2	3.0	4.5	3.1	4.8	3.2	5.4	3.3	5.8	3.2
	16	3.0	2.6	3.6	2.8	4.2	3.0	4.5	3.1	4.8	3.2	5.4	3.3	5.7	3.2
	18	3.0	2.6	3.6	2.8	4.2	3.0	4.5	3.1	4.8	3.2	5.4	3.3	5.6	3.2
	20	3.0	2.6	3.6	2.8	4.2	3.0	4.5	3.1	4.8	3.2	5.4	3.3	5.5	3.1
	21	3.0	2.6	3.6	2.8	4.2	3.0	4.5	3.1	4.8	3.2	5.4	3.3	5.5	3.1
	23	3.0	2.6	3.6	2.8	4.2	3.0	4.5	3.1	4.8	3.2	5.4	3.3	5.4	3.0
	25	3.0	2.6	3.6	2.8	4.2	3.0	4.5	3.1	4.8	3.2	5.3	3.3	5.3	3.0
	27	3.0	2.6	3.6	2.8	4.2	3.0	4.5	3.1	4.8	3.2	5.2	3.2	5.3	3.0
	29	3.0	2.6	3.6	2.8	4.2	3.0	4.5	3.1	4.8	3.2	5.1	3.2	5.2	2.9
	31	3.0	2.6	3.6	2.8	4.2	3.0	4.5	3.1	4.8	3.2	5.1	3.1	5.1	2.9
	33	3.0	2.6	3.6	2.8	4.2	3.0	4.5	3.1	4.8	3.2	4.9	3.1	5.0	2.8
	35	3.0	2.6	3.6	2.8	4.2	3.0	4.5	3.1	4.8	3.2	4.9	3.0	4.9	2.8
	37	3.0	2.6	3.6	2.8	4.2	3.0	4.5	3.1	4.7	3.1	4.8	3.0	4.9	2.7
	39	3.0	2.6	3.6	2.8	4.2	3.0	4.5	3.1	4.6	3.0	4.7	2.9	4.8	2.7
5.6	10	3.8	3.1	4.5	3.4	5.2	3.7	5.6	3.8	6.0	3.9	6.7	4.0	7.3	4.0
	12	3.8	3.1	4.5	3.4	5.2	3.7	5.6	3.8	6.0	3.9	6.7	4.0	7.3	4.0
	14	3.8	3.1	4.5	3.4	5.2	3.7	5.6	3.8	6.0	3.9	6.7	4.0	7.2	3.9
	16	3.8	3.1	4.5	3.4	5.2	3.7	5.6	3.8	6.0	3.9	6.7	4.0	7.1	3.8
	18	3.8	3.1	4.5	3.4	5.2	3.7	5.6	3.8	6.0	3.9	6.7	4.0	6.9	3.8
	20	3.8	3.1	4.5	3.4	5.2	3.7	5.6	3.8	6.0	3.9	6.7	4.0	6.9	3.8
	21	3.8	3.1	4.5	3.4	5.2	3.7	5.6	3.8	6.0	3.9	6.7	4.0	6.9	3.8
	23	3.8	3.1	4.5	3.4	5.2	3.7	5.6	3.8	6.0	3.9	6.7	4.0	6.7	3.7
	25	3.8	3.1	4.5	3.4	5.2	3.7	5.6	3.8	6.0	3.9	6.6	4.0	6.6	3.6
	27	3.8	3.1	4.5	3.4	5.2	3.7	5.6	3.8	6.0	3.9	6.5	3.9	6.5	3.6
	29	3.8	3.1	4.5	3.4	5.2	3.7	5.6	3.8	6.0	3.9	6.4	3.8	6.5	3.5
	31	3.8	3.1	4.5	3.4	5.2	3.7	5.6	3.8	6.0	3.9	6.3	3.8	6.4	3.5
	33	3.8	3.1	4.5	3.4	5.2	3.7	5.6	3.8	6.0	3.9	6.2	3.8	6.2	3.4
	35	3.8	3.1	4.5	3.4	5.2	3.7	5.6	3.8	6.0	3.9	6.1	3.7	6.2	3.4
	37	3.8	3.1	4.5	3.4	5.2	3.7	5.6	3.8	5.8	3.8	5.9	3.6	6.1	3.3
	39	3.8	3.1	4.5	3.4	5.2	3.7	5.6	3.8	5.7	3.7	5.8	3.5	6.0	3.2

Notes:
TC: Total Capacity(kW)
SHC: Sensible Heat Capacity(kW)
1. Capacity tables show the representative value of conditions which may occur.
2. Refer to Capacity Correction Factor in the outdoor unit PDB for the actual performance data of each indoor unit and outdoor unit combination.

6. Capacity Tables

Cooling Capacity

Capacity Index	Outdoor air temp. (DB, °C)	Indoor air temp. (DB/WB, °C)													
		20		23		26		27		28		30		32	
		14		16		18		19		20		22		24	
		TC	SHC	TC	SHC	TC	SHC	TC	SHC	TC	SHC	TC	SHC	TC	SHC
		kW	kW	kW	kW	kW	kW	kW	kW	kW	kW	kW	kW	kW	kW
7.1	10	4.8	4.0	5.7	4.4	6.6	4.7	7.1	4.8	7.6	5.0	8.5	5.2	9.3	5.1
	12	4.8	4.0	5.7	4.4	6.6	4.7	7.1	4.8	7.6	5.0	8.5	5.2	9.2	5.1
	14	4.8	4.0	5.7	4.4	6.6	4.7	7.1	4.8	7.6	5.0	8.5	5.2	9.1	5.0
	16	4.8	4.0	5.7	4.4	6.6	4.7	7.1	4.8	7.6	5.0	8.5	5.2	9.0	4.9
	18	4.8	4.0	5.7	4.4	6.6	4.7	7.1	4.8	7.6	5.0	8.5	5.2	8.8	4.9
	20	4.8	4.0	5.7	4.4	6.6	4.7	7.1	4.8	7.6	5.0	8.5	5.2	8.7	4.8
	21	4.8	4.0	5.7	4.4	6.6	4.7	7.1	4.8	7.6	5.0	8.5	5.2	8.7	4.8
	23	4.8	4.0	5.7	4.4	6.6	4.7	7.1	4.8	7.6	5.0	8.5	5.2	8.5	4.7
	25	4.8	4.0	5.7	4.4	6.6	4.7	7.1	4.8	7.6	5.0	8.4	5.1	8.4	4.6
	27	4.8	4.0	5.7	4.4	6.6	4.7	7.1	4.8	7.6	5.0	8.2	5.0	8.3	4.6
	29	4.8	4.0	5.7	4.4	6.6	4.7	7.1	4.8	7.6	5.0	8.1	4.9	8.2	4.5
	31	4.8	4.0	5.7	4.4	6.6	4.7	7.1	4.8	7.6	5.0	8.0	4.8	8.1	4.4
	33	4.8	4.0	5.7	4.4	6.6	4.7	7.1	4.8	7.6	5.0	7.8	4.8	7.9	4.4
	35	4.8	4.0	5.7	4.4	6.6	4.7	7.1	4.8	7.6	5.0	7.7	4.7	7.8	4.4
	37	4.8	4.0	5.7	4.4	6.6	4.7	7.1	4.8	7.4	4.8	7.5	4.6	7.7	4.3
	39	4.8	4.0	5.7	4.4	6.6	4.7	7.1	4.8	7.2	4.7	7.4	4.5	7.6	4.2

Notes:

TC: Total Capacity(kW)

SHC: Sensible Heat Capacity(kW)

1. Capacity tables show the representative value of conditions which may occur.
2. Refer to Capacity Correction Factor in the outdoor unit PDB for the actual performance data of each indoor unit and outdoor unit combination.

6. Capacity Tables

6.2 Heating Capacity

Heating Capacity

Capacity Index	Outdoor air temp.		Indoor air temp. (DB, °C)					
			16	18	20	21	22	24
	DB(°C)	WB(°C)	TC	TC	TC	TC	TC	TC
			kW	kW	kW	kW	kW	kW
1.6	-24.8	-25.0	1.0	1.0	1.0	1.0	1.0	1.0
	-21.8	-22.0	1.3	1.3	1.3	1.3	1.3	1.2
	-19.8	-20.0	1.3	1.3	1.3	1.3	1.3	1.3
	-18.8	-19.0	1.4	1.3	1.3	1.3	1.3	1.3
	-16.7	-17.0	1.4	1.4	1.4	1.4	1.4	1.4
	-14.7	-15.0	1.5	1.5	1.5	1.5	1.5	1.5
	-12.6	-13.0	1.6	1.6	1.6	1.6	1.5	1.5
	-10.5	-11.0	1.6	1.6	1.6	1.6	1.6	1.6
	-9.5	-10.0	1.7	1.7	1.7	1.7	1.7	1.6
	-8.5	-9.1	1.7	1.7	1.7	1.7	1.7	1.6
	-7.0	-7.6	1.7	1.7	1.7	1.7	1.7	1.6
	-5.0	-5.6	1.8	1.8	1.8	1.7	1.7	1.6
	-3.0	-3.7	1.9	1.8	1.8	1.7	1.7	1.6
	0.0	-0.7	1.9	1.9	1.8	1.7	1.7	1.6
	3.0	2.2	2.0	1.9	1.8	1.7	1.7	1.6
	5.0	4.1	2.0	1.9	1.8	1.7	1.7	1.6
	7.0	6.0	2.0	1.9	1.8	1.7	1.7	1.6
	9.0	7.9	2.0	1.9	1.8	1.7	1.7	1.6
	11.0	9.8	2.0	1.9	1.8	1.7	1.7	1.6
	13.0	11.8	2.0	1.9	1.8	1.7	1.7	1.6
	15.0	13.7	2.0	1.9	1.8	1.7	1.7	1.6
2.2	-24.8	-25.0	1.4	1.4	1.4	1.4	1.4	1.4
	-21.8	-22.0	1.7	1.7	1.7	1.7	1.7	1.7
	-19.8	-20.0	1.8	1.8	1.8	1.8	1.8	1.8
	-18.8	-19.0	1.9	1.9	1.9	1.9	1.9	1.9
	-16.7	-17.0	2.0	2.0	2.0	2.0	2.0	2.0
	-14.7	-15.0	2.1	2.1	2.1	2.1	2.1	2.0
	-12.6	-13.0	2.2	2.2	2.2	2.2	2.1	2.1
	-10.5	-11.0	2.3	2.3	2.2	2.2	2.2	2.2
	-9.5	-10.0	2.3	2.3	2.3	2.3	2.3	2.2
	-8.5	-9.1	2.3	2.3	2.3	2.3	2.3	2.2
	-7.0	-7.6	2.4	2.4	2.4	2.4	2.3	2.2
	-5.0	-5.6	2.5	2.5	2.5	2.4	2.3	2.2
	-3.0	-3.7	2.6	2.6	2.5	2.4	2.3	2.2
	0.0	-0.7	2.7	2.6	2.5	2.4	2.3	2.2
	3.0	2.2	2.7	2.7	2.5	2.4	2.3	2.2
	5.0	4.1	2.8	2.7	2.5	2.4	2.3	2.2
	7.0	6.0	2.8	2.7	2.5	2.4	2.3	2.2
	9.0	7.9	2.8	2.7	2.5	2.4	2.3	2.2
	11.0	9.8	2.8	2.7	2.5	2.4	2.3	2.2
	13.0	11.8	2.8	2.7	2.5	2.4	2.3	2.2
	15.0	13.7	2.8	2.7	2.5	2.4	2.3	2.2
2.8	-24.8	-25.0	1.9	1.9	1.8	1.8	1.8	1.8
	-21.8	-22.0	2.2	2.2	2.2	2.2	2.2	2.2
	-19.8	-20.0	2.4	2.4	2.3	2.3	2.3	2.3
	-18.8	-19.0	2.4	2.4	2.4	2.4	2.4	2.4
	-16.7	-17.0	2.5	2.5	2.5	2.5	2.5	2.5
	-14.7	-15.0	2.7	2.7	2.6	2.6	2.6	2.6
	-12.6	-13.0	2.8	2.8	2.8	2.8	2.7	2.7
	-10.5	-11.0	2.9	2.9	2.9	2.9	2.9	2.8
	-9.5	-10.0	3.0	3.0	2.9	2.9	2.9	2.8
	-8.5	-9.1	3.0	3.0	3.0	3.0	3.0	2.8
	-7.0	-7.6	3.1	3.1	3.1	3.1	3.0	2.8
	-5.0	-5.6	3.2	3.2	3.2	3.1	3.0	2.8
	-3.0	-3.7	3.4	3.3	3.2	3.1	3.0	2.8
	0.0	-0.7	3.4	3.3	3.2	3.1	3.0	2.8
	3.0	2.2	3.5	3.4	3.2	3.1	3.0	2.8
	5.0	4.1	3.6	3.4	3.2	3.1	3.0	2.8
	7.0	6.0	3.6	3.4	3.2	3.1	3.0	2.8
	9.0	7.9	3.6	3.4	3.2	3.1	3.0	2.8
	11.0	9.8	3.6	3.4	3.2	3.1	3.0	2.8
	13.0	11.8	3.6	3.4	3.2	3.1	3.0	2.8
	15.0	13.7	3.6	3.4	3.2	3.1	3.0	2.8

Notes:

TC: Total Capacity(kW)

1. Capacity tables show the representative value of conditions which may occur.
2. is shown as reference. When selecting the outdoor units, avoid the outdoor air temperature range shown by .
3. In accordance with operation limits of outdoor unit, applicable range of capacity tables is different.
4. Refer to Capacity Correction Factor in the outdoor unit PDB for the actual performance data of each indoor unit and outdoor unit combination.

6. Capacity Tables

Heating Capacity

Capacity Index	Outdoor air temp.		Indoor air temp. (DB, °C)					
			16	18	20	21	22	24
	DB(°C)	WB(°C)	TC	TC	TC	TC	TC	TC
			kW	kW	kW	kW	kW	kW
3.6	-24.8	-25.0	2.3	2.3	2.3	2.3	2.3	2.3
	-21.8	-22.0	2.8	2.8	2.8	2.8	2.8	2.8
	-19.8	-20.0	2.9	2.9	2.9	2.9	2.9	2.9
	-18.8	-19.0	3.0	3.0	3.0	3.0	3.0	3.0
	-16.7	-17.0	3.1	3.1	3.1	3.1	3.1	3.1
	-14.7	-15.0	3.3	3.3	3.3	3.3	3.3	3.3
	-12.6	-13.0	3.5	3.4	3.4	3.4	3.4	3.4
	-10.5	-11.0	3.6	3.6	3.6	3.6	3.6	3.5
	-9.5	-10.0	3.7	3.7	3.7	3.7	3.7	3.5
	-8.5	-9.1	3.8	3.8	3.7	3.7	3.7	3.5
	-7.0	-7.6	3.9	3.9	3.9	3.8	3.7	3.5
	-5.0	-5.6	4.0	4.0	4.0	3.9	3.7	3.5
	-3.0	-3.7	4.2	4.1	4.0	3.9	3.7	3.5
	0.0	-0.7	4.3	4.1	4.0	3.9	3.7	3.5
	3.0	2.2	4.4	4.3	4.0	3.9	3.7	3.5
	5.0	4.1	4.5	4.3	4.0	3.9	3.7	3.5
	7.0	6.0	4.5	4.3	4.0	3.9	3.7	3.5
	9.0	7.9	4.5	4.3	4.0	3.9	3.7	3.5
	11.0	9.8	4.5	4.3	4.0	3.9	3.7	3.5
	13.0	11.8	4.5	4.3	4.0	3.9	3.7	3.5
	15.0	13.7	4.5	4.3	4.0	3.9	3.7	3.5
4.5	-24.8	-25.0	2.9	2.9	2.9	2.9	2.9	2.9
	-21.8	-22.0	3.5	3.5	3.5	3.5	3.5	3.5
	-19.8	-20.0	3.7	3.7	3.7	3.7	3.7	3.6
	-18.8	-19.0	3.8	3.7	3.7	3.7	3.7	3.7
	-16.7	-17.0	3.9	3.9	3.9	3.9	3.9	3.9
	-14.7	-15.0	4.1	4.1	4.1	4.1	4.1	4.1
	-12.6	-13.0	4.3	4.3	4.3	4.3	4.3	4.3
	-10.5	-11.0	4.5	4.5	4.5	4.5	4.5	4.4
	-9.5	-10.0	4.6	4.6	4.6	4.6	4.6	4.4
	-8.5	-9.1	4.7	4.7	4.7	4.7	4.7	4.4
	-7.0	-7.6	4.8	4.8	4.8	4.8	4.7	4.4
	-5.0	-5.6	5.0	5.0	5.0	4.8	4.7	4.4
	-3.0	-3.7	5.3	5.1	5.0	4.8	4.7	4.4
	0.0	-0.7	5.3	5.2	5.0	4.8	4.7	4.4
	3.0	2.2	5.5	5.3	5.0	4.8	4.7	4.4
	5.0	4.1	5.6	5.3	5.0	4.8	4.7	4.4
	7.0	6.0	5.6	5.3	5.0	4.8	4.7	4.4
	9.0	7.9	5.6	5.3	5.0	4.8	4.7	4.4
	11.0	9.8	5.6	5.3	5.0	4.8	4.7	4.4
	13.0	11.8	5.6	5.3	5.0	4.8	4.7	4.4
	15.0	13.7	5.6	5.3	5.0	4.8	4.7	4.4
5.6	-24.8	-25.0	3.6	3.6	3.6	3.6	3.6	3.6
	-21.8	-22.0	4.4	4.4	4.4	4.4	4.4	4.4
	-19.8	-20.0	4.6	4.6	4.6	4.6	4.6	4.6
	-18.8	-19.0	4.8	4.7	4.7	4.7	4.7	4.7
	-16.7	-17.0	5.0	5.0	5.0	4.9	4.9	4.9
	-14.7	-15.0	5.2	5.2	5.2	5.2	5.2	5.2
	-12.6	-13.0	5.5	5.4	5.4	5.4	5.4	5.4
	-10.5	-11.0	5.7	5.7	5.7	5.7	5.7	5.5
	-9.5	-10.0	5.8	5.8	5.8	5.8	5.8	5.5
	-8.5	-9.1	5.9	5.9	5.9	5.9	5.9	5.5
	-7.0	-7.6	6.1	6.1	6.1	6.0	5.9	5.5
	-5.0	-5.6	6.3	6.3	6.3	6.1	5.9	5.5
	-3.0	-3.7	6.6	6.5	6.3	6.1	5.9	5.5
	0.0	-0.7	6.7	6.5	6.3	6.1	5.9	5.5
	3.0	2.2	6.9	6.7	6.3	6.1	5.9	5.5
	5.0	4.1	7.0	6.7	6.3	6.1	5.9	5.5
	7.0	6.0	7.1	6.7	6.3	6.1	5.9	5.5
	9.0	7.9	7.1	6.7	6.3	6.1	5.9	5.5
	11.0	9.8	7.1	6.7	6.3	6.1	5.9	5.5
	13.0	11.8	7.1	6.7	6.3	6.1	5.9	5.5
	15.0	13.7	7.1	6.7	6.3	6.1	5.9	5.5

Notes:

TC: Total Capacity(kW)

1. Capacity tables show the representative value of conditions which may occur.
2. is shown as reference. When selecting the outdoor units, avoid the outdoor air temperature range shown by .
3. In accordance with operation limits of outdoor unit, applicable range of capacity tables is different.
4. Refer to Capacity Correction Factor in the outdoor unit PDB for the actual performance data of each indoor unit and outdoor unit combination.

6. Capacity Tables

Heating Capacity

Capacity Index	Outdoor air temp.		Indoor air temp. (DB, °C)					
			16	18	20	21	22	24
	DB(°C)	WB(°C)	TC	TC	TC	TC	TC	TC
			kW	kW	kW	kW	kW	kW
7.1	-24.8	-25.0	4.6	4.6	4.6	4.6	4.6	4.6
	-21.8	-22.0	5.6	5.6	5.6	5.6	5.6	5.5
	-19.8	-20.0	5.9	5.9	5.9	5.9	5.9	5.8
	-18.8	-19.0	6.0	6.0	6.0	6.0	6.0	6.0
	-16.7	-17.0	6.3	6.3	6.3	6.3	6.3	6.3
	-14.7	-15.0	6.6	6.6	6.6	6.6	6.6	6.6
	-12.6	-13.0	6.9	6.9	6.9	6.9	6.9	6.9
	-10.5	-11.0	7.2	7.2	7.2	7.2	7.2	7.0
	-9.5	-10.0	7.4	7.4	7.3	7.3	7.3	7.0
	-8.5	-9.1	7.5	7.5	7.5	7.5	7.5	7.0
	-7.0	-7.6	7.7	7.7	7.7	7.7	7.5	7.0
	-5.0	-5.6	8.0	8.0	8.0	7.7	7.5	7.0
	-3.0	-3.7	8.4	8.2	8.0	7.7	7.5	7.0
	0.0	-0.7	8.6	8.3	8.0	7.7	7.5	7.0
	3.0	2.2	8.8	8.5	8.0	7.7	7.5	7.0
	5.0	4.1	8.9	8.5	8.0	7.7	7.5	7.0
	7.0	6.0	9.0	8.5	8.0	7.7	7.5	7.0
	9.0	7.9	9.0	8.5	8.0	7.7	7.5	7.0
	11.0	9.8	9.0	8.5	8.0	7.7	7.5	7.0
	13.0	11.8	9.0	8.5	8.0	7.7	7.5	7.0
	15.0	13.7	9.0	8.5	8.0	7.7	7.5	7.0

Notes:
TC: Total Capacity(kW)
1. Capacity tables show the representative value of conditions which may occur.
2. is shown as reference. When selecting the outdoor units, avoid the outdoor air temperature range shown by .
3. In accordance with operation limits of outdoor unit, applicable range of capacity tables is different.
4. Refer to Capacity Correction Factor in the outdoor unit PDB for the actual performance data of each indoor unit and outdoor unit combination.

7. Air Velocity and Temperature Distribution(Reference Data)

ARNU05GSB*4, ARNU07GSB*4

Cooling

Discharge angle : 15°

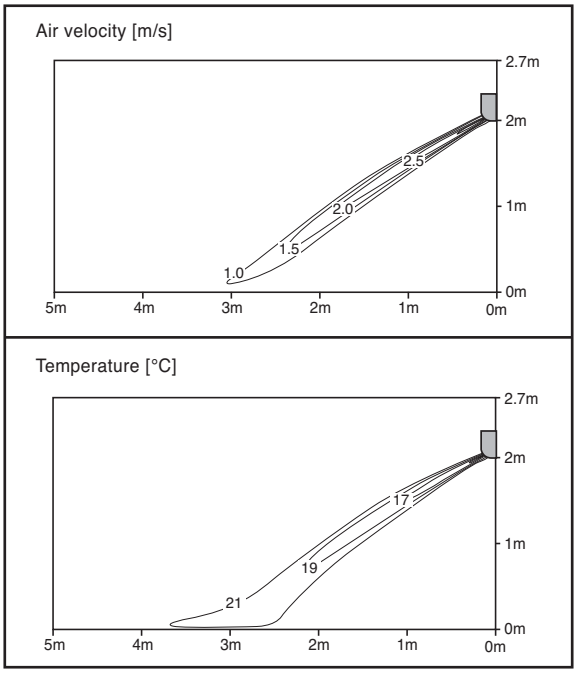

Heating

Discharge angle : 40°

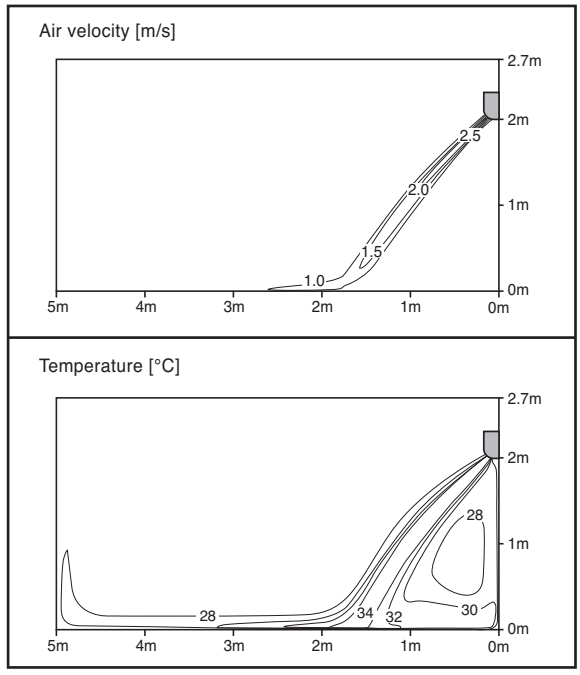

ARNU09GSB*4

Cooling

Discharge angle : 15°

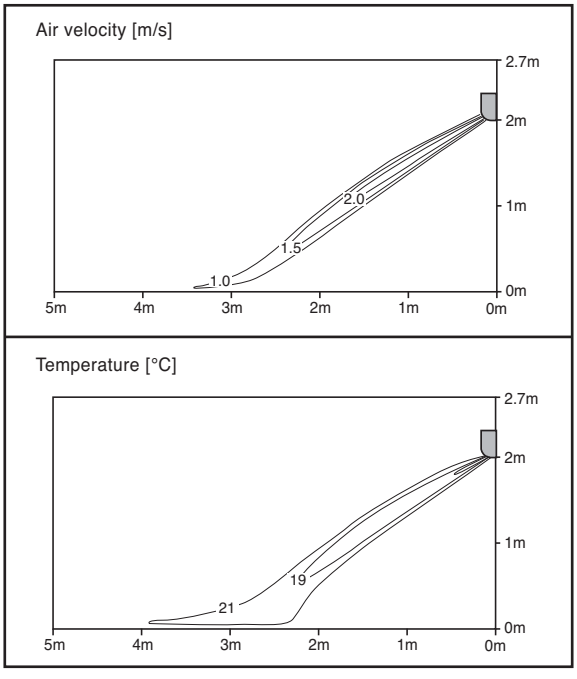

Heating

Discharge angle : 40°

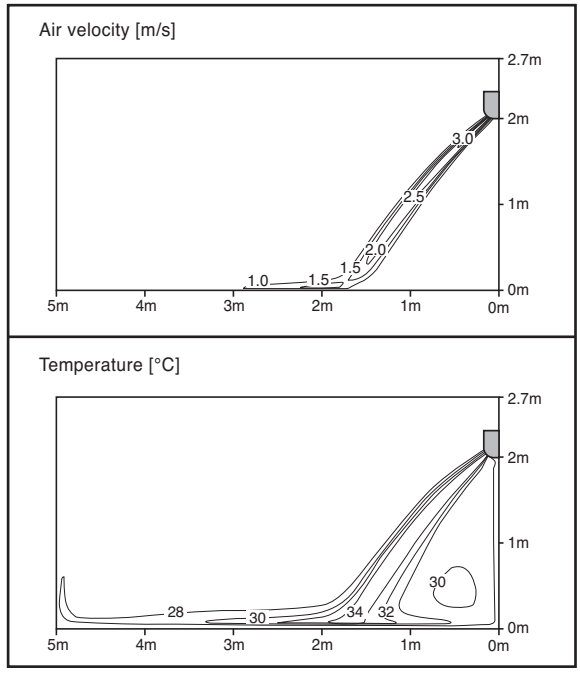

7. Air Velocity and Temperature Distribution(Reference Data)

ARNU12GSB*4

Cooling

Discharge angle : 15°

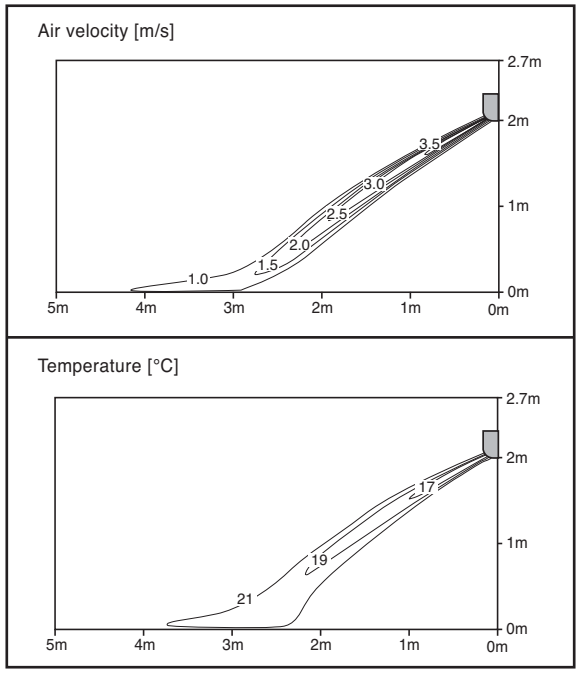

Heating

Discharge angle : 40°

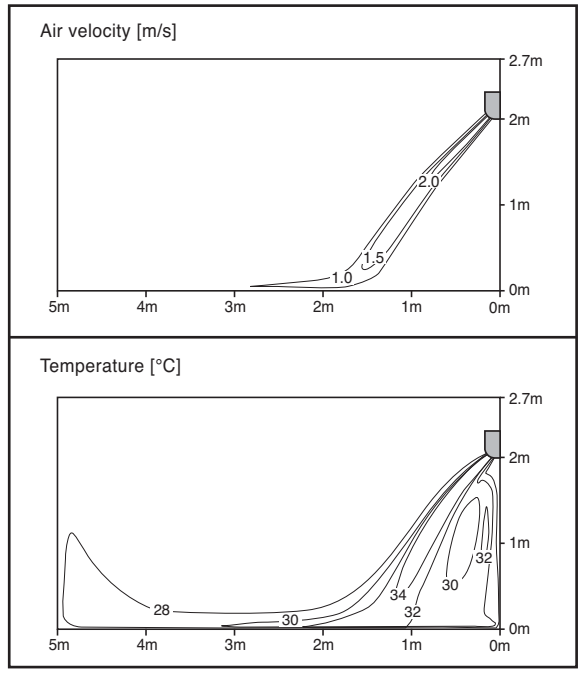

ARNU15GSB*4

Cooling

DDischarge angle : 15°

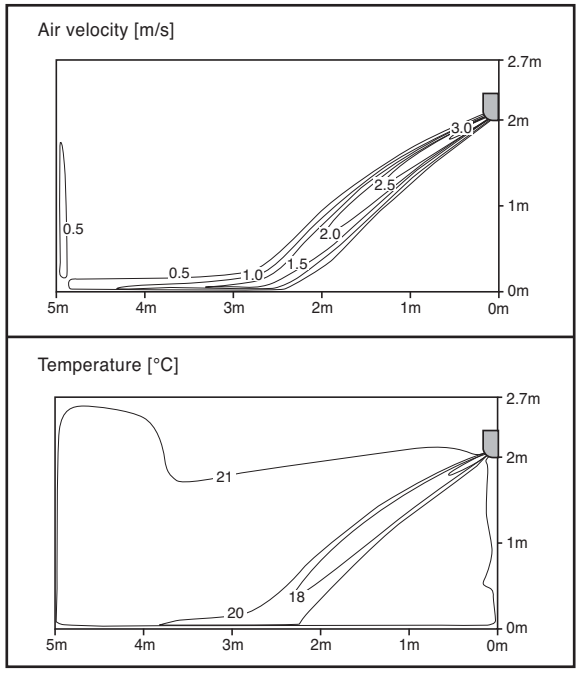

Heating

Discharge angle : 40°

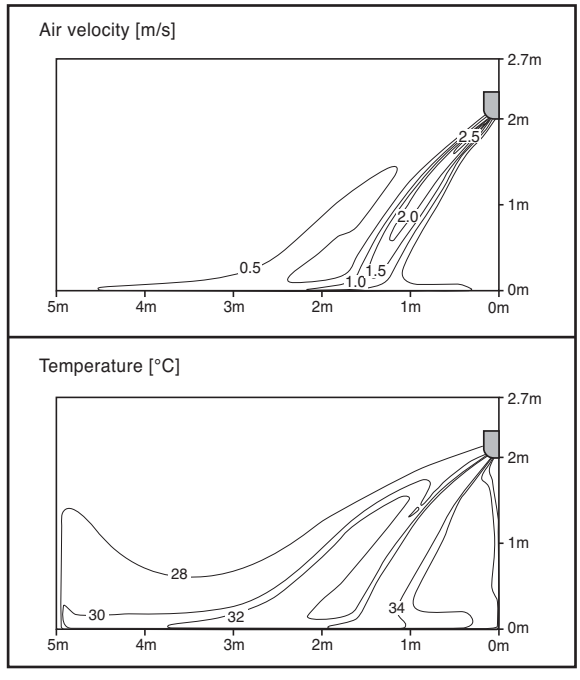

7. Air Velocity and Temperature Distribution(Reference Data)

ARNU18GSC*4

Cooling

Discharge angle : 10°

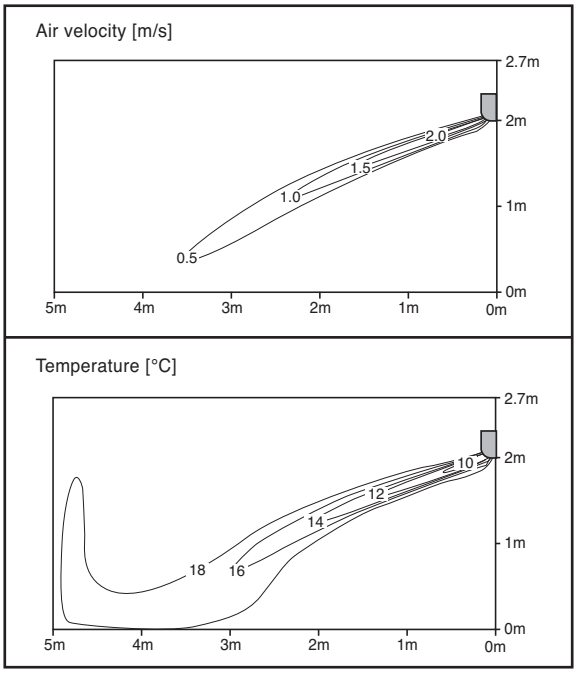

Heating

Discharge angle : 30°

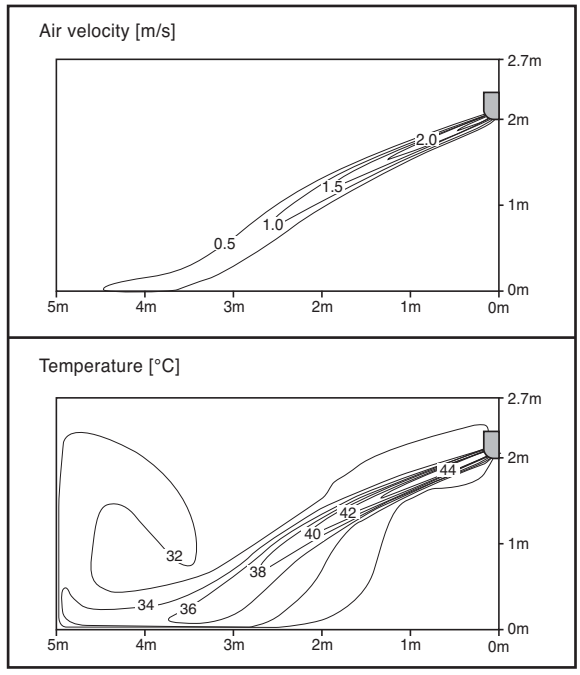

ARNU24GSC*4

Cooling

Discharge angle : 10°

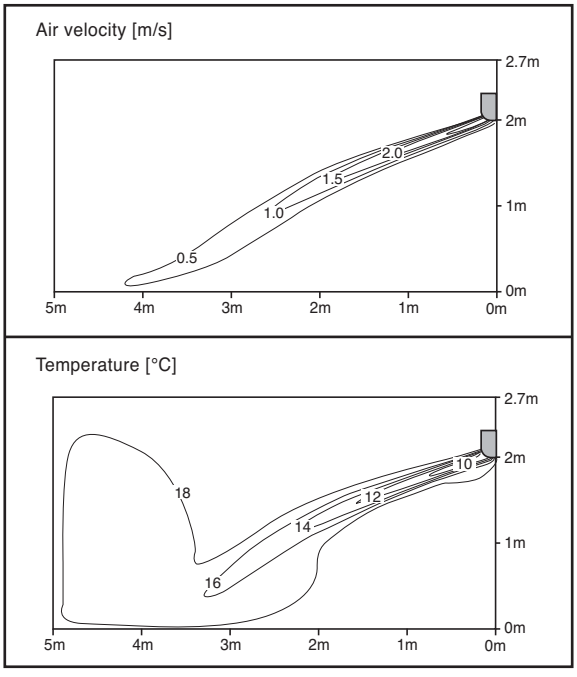

Heating

Discharge angle : 30°

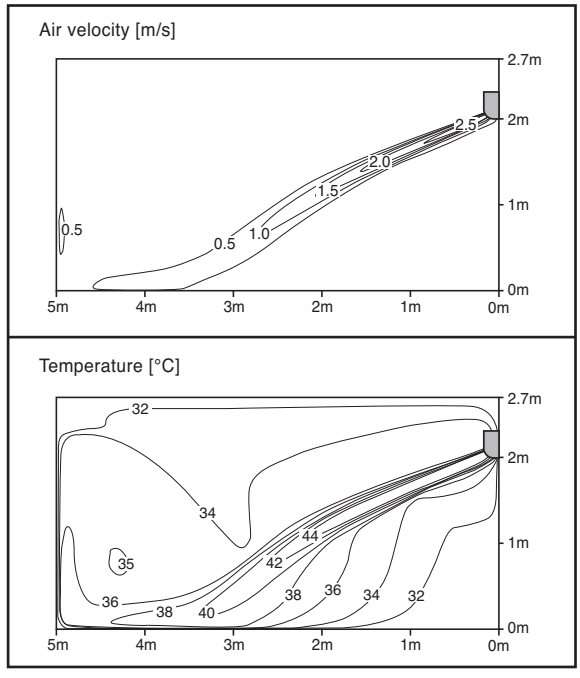

8. Electric Characteristics

Units					Power supply		IFM		Input	
Model	Type	Hz	Volts	Voltage range	MCA	MFA	kW	FLA	Cooling	Heating
ARNU05GSB*4	SB	50	220-240	Max: 264 Min:198	0.20	15	0.02	0.16	21.0	21.0
ARNU07GSB*4	SB				0.20	15	0.02	0.16	21.0	21.0
ARNU09GSB*4	SB				0.20	15	0.02	0.16	21.0	21.0
ARNU12GSB*4	SB				0.20	15	0.02	0.16	21.0	21.0
ARNU15GSB*4	SB				0.20	15	0.02	0.16	21.0	21.0
ARNU18GSC*4	SC				0.36	15	0.08	0.29	39.5	39.5
ARNU24GSC*4	SC				0.36	15	0.08	0.29	39.5	39.5
ARNU05GSB*4	SB	60	220	Max: 242 Min:198	0.20	15	0.02	0.16	21.0	21.0
ARNU07GSB*4	SB				0.20	15	0.02	0.16	21.0	21.0
ARNU09GSB*4	SB				0.20	15	0.02	0.16	21.0	21.0
ARNU12GSB*4	SB				0.20	15	0.02	0.16	21.0	21.0
ARNU15GSB*4	SB				0.20	15	0.02	0.16	21.0	21.0
ARNU18GSC*4	SC				0.36	15	0.08	0.29	39.5	39.5
ARNU24GSC*4	SC				0.36	15	0.08	0.29	39.5	39.5

Symbols:

MCA :Min, Circuit Amps(A)

MFA:Max. Fuse Amps(see note 5)

kW:Fan Motor Rated Output(kW)

FLA:Full Load Amps(A)

IFM:Indoor Fan Motor

Note :

1. Voltage range
   Units are suitable for use on electrical systems where voltage supplied to unit terminals is not below or above the listed range limits.
2. Maximum allowable voltage unbalance between phases is 2%
3. MCA/MFA
   MCA=1.25 x FLA
   MFA≤ 4 x FLA
   (Next lower standard fuse rating. Min. 15A)
4. Select wire size based on the MCA
5. Instead of fuse, use Circuit Breaker.

9. Sound Levels

9.1 Sound Pressure Levels

Overall

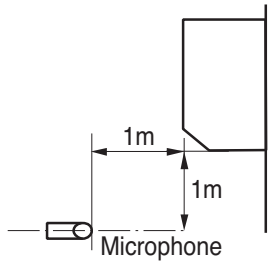

❉ Measuring place : Anechoic chamber

Notes:

1. Sound measured at 1.5m away from the center of the unit
2. Operating conditionl
   - Power source : 220-240V 50Hz / 220V 60Hz
   - Cooling : Indoor temperature (27°C DB, 19°C WB), Outdoor temperature (35°C DB, 24°C WB)
   - Heating : Indoor temperature (20°C DB, 15°C WB), Outdoor temperature (7°C DB, 6°C WB)
3. Reference accoustic pressure 0dB = 20μPa
4. Sound level will vary depending on a range of factors such as the construction(acoustic absorption coefficient) of particular room in which the equipment in installed.

Model	Sound Pressure Levels dB(A)		
	H	M	L
ARNU05GSB*4	30	29	28
ARNU07GSB*4	32	30	28
ARNU09GSB*4	34	32	28
ARNU12GSB*4	37	34	30
ARNU15GSB*4	40	36	32
ARNU18GSC*4	38	35	33
ARNU24GSC*4	43	39	35

ARNU05GSB*4

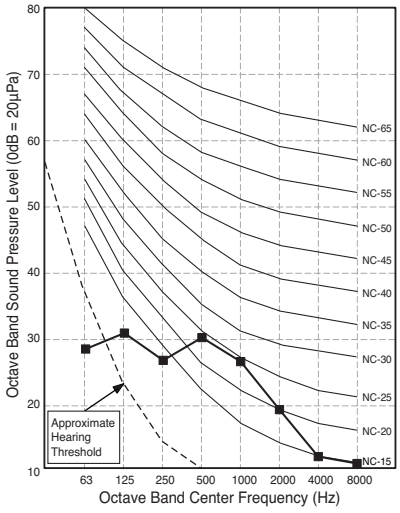

ARNU07GSB*4

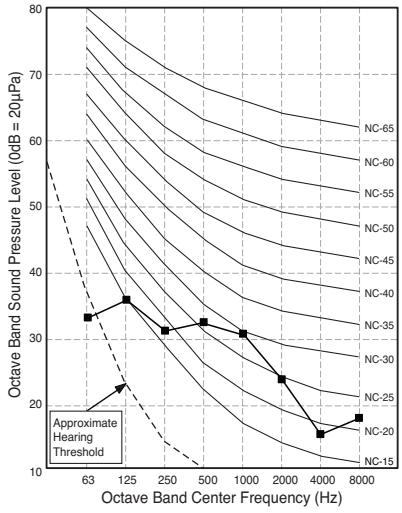

ARNU09GSB*4

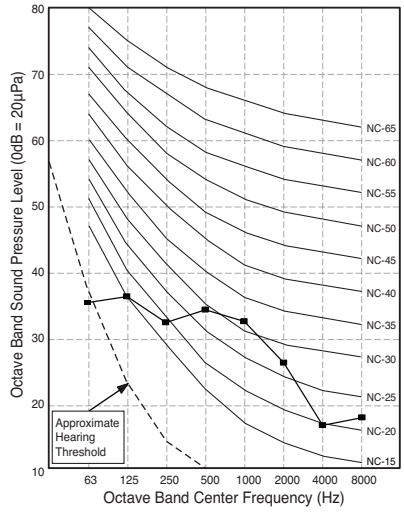

9. Sound Levels

ARNU12GSB*4

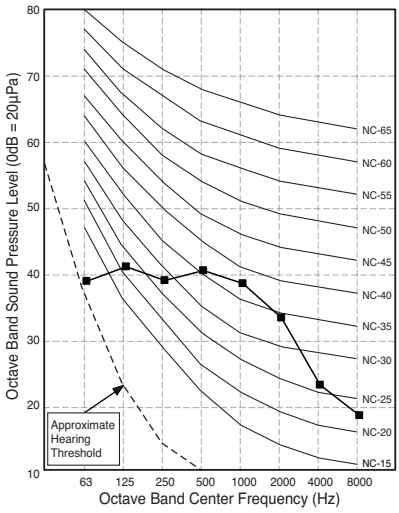

ARNU15GSB*4

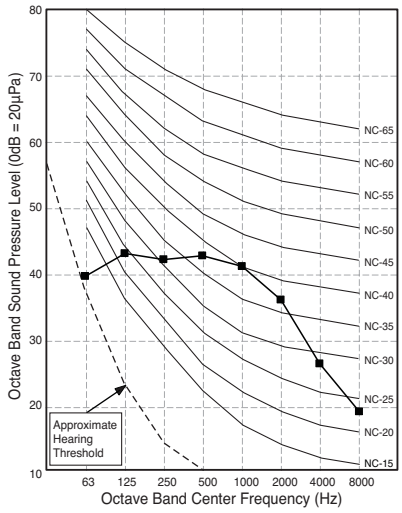

ARNU18GSC*4

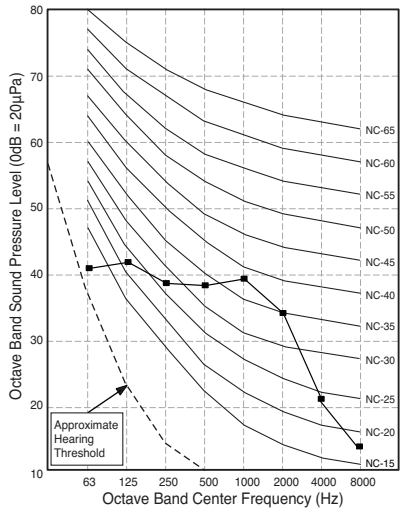

ARNU24GSC*4

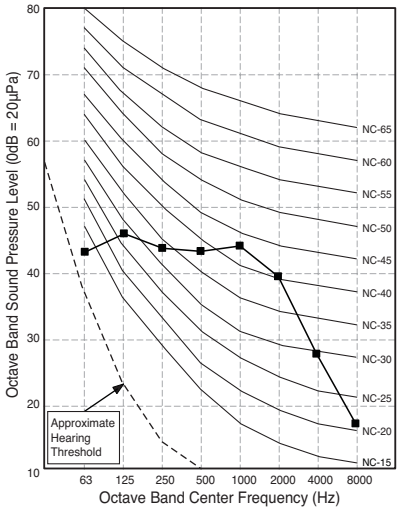

9. Sound Levels

9.2 Sound Power Levels

Model	Sound Power Levels dB(A)
	High Fan Speed
ARNU05GSB*4	54.0
ARNU07GSB*4	54.0
ARNU09GSB*4	55.0
ARNU12GSB*4	55.0
ARNU15GSB*4	58.0
ARNU18GSC*4	57.0
ARNU24GSC*4	62.0

Notes:
- Data is valid at diffuse field condition
- Data is valid at nominal operating condition
- Sound level can be increased in static pressure mode or used air guide.
- Sound power level is measured on the rated condition in the reverberation rooms.
- Sound level will vary depending on a range of factors such as the construction (acoustic absorption coefficient) of particular room in which the equipment in installed.
- Reference acoustic intensity 0dB = 10E-6μW/m^2

ARNU05GSB*4

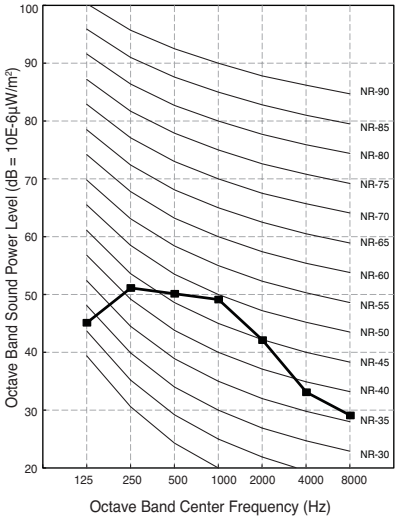

ARNU07GSB*4

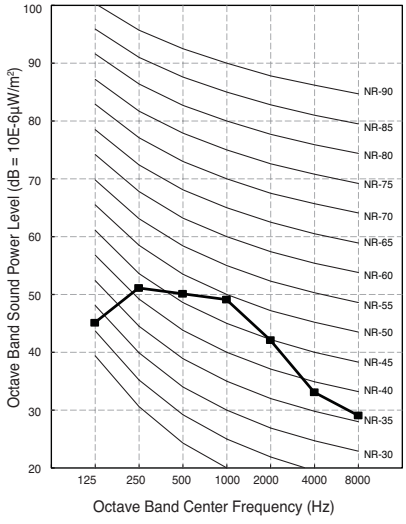

ARNU09GSB*4

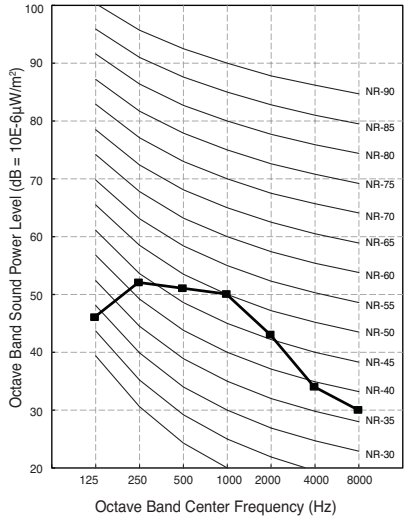

ARNU12GSB*4

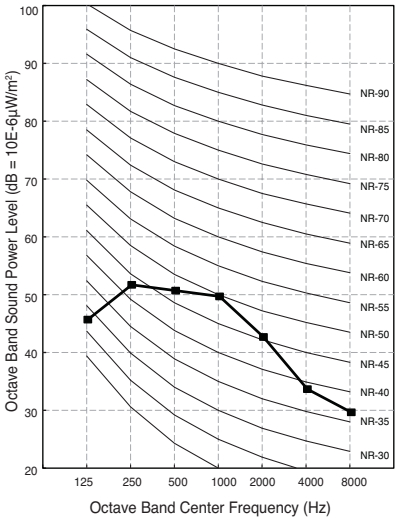

ARNU15GSB*4

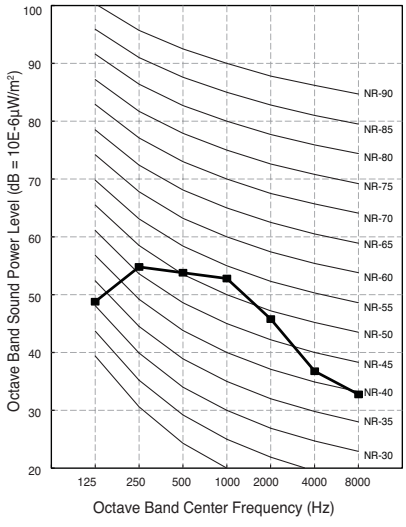

ARNU18GSC*4

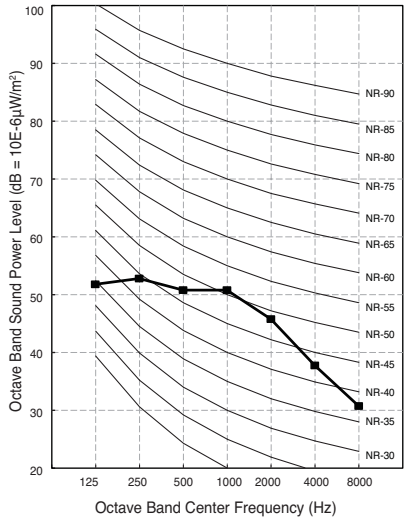

9. Sound Levels

ARNU24GSC*4

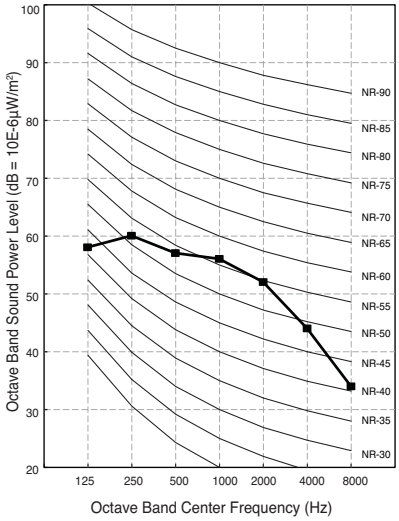

10. Installation

- Please read this instruction sheet completely before installing the product.
- When the power cord is damaged, replacement work shall be performed by authorized personnel only.
- Installation work must be performed in accordance with the national wiring standards by authorized personnel only.

Installation Parts Provided

1. Installation Plate

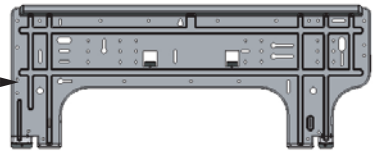

2. Type “A” screws



3. Type “B” screws

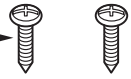

Required Parts

- ❏ Installation plate
- ❏ Five type "A" screws
- ❏ Two type “B” screws
- ❏ Connecting cable

- ❏ Pipes: Gas side
  Liquid side
- ❏ Insulation materials
- ❏ Additional drain pipe

Required Tools

- ❏ Level gauge
- ❏ Screw driver
- ❏ Electric drill
- ❏ Hole core drill

- ❏ Flaring tool set
- ❏ Specified torque wrenches
- ❏ Spanner.....Half union

- ❏ A glass of water
- ❏ Screw driver

- ❏ Thermometer

10. Installation

10.1 Selection of the best location

- There should not be any heat or steam near the unit.
- Select a place where there are no obstacles around of the unit.
- Make sure that condensation drainage can be conveniently routed away.
- Do not install near a doorway.
- Ensure that the interval between a wall and the left (or right) of the unit is more than 100mm. The unit should be installed as high as possible on the wall, allowing a minimum of 120mm from ceiling.
- Use a metal detector to locate studs to prevent unnecessary damage to the wall.

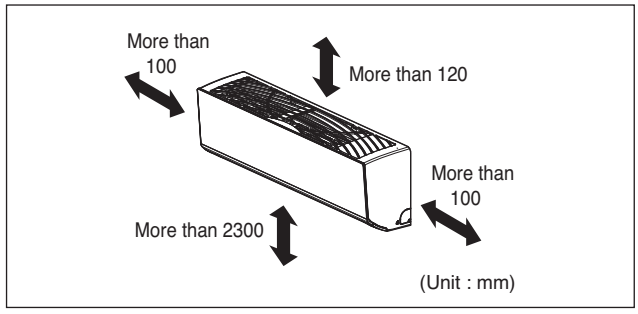

Fixing Installation Plate

The wall you select should be strong and solid enough to prevent vibration

- Mount the installation plate on the wall with type "A" screws. If mounting the unit on a concrete wall, use anchor bolts.
  - Mount the installation plate horizontally by aligning the centerline using Horizontal meter .
- Measure the wall and mark the centerline. It is also important to use caution concerning the location of the installation plate. Routing of the wiring to power outlets is through the walls typically. Drilling the hole through the wall for piping connections must be done safely.

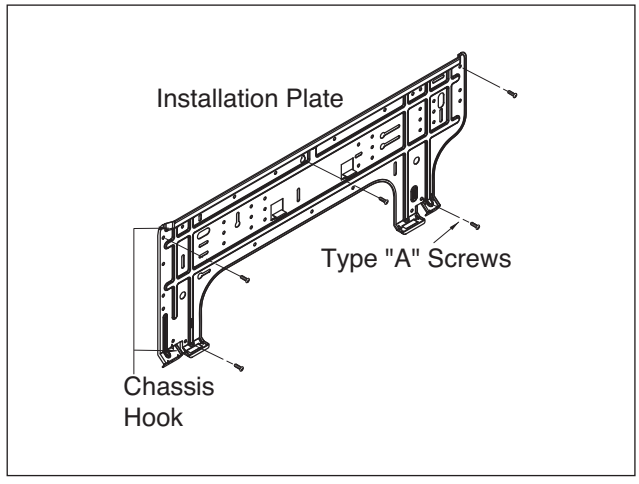

The lower left and the right side of Installation Plate

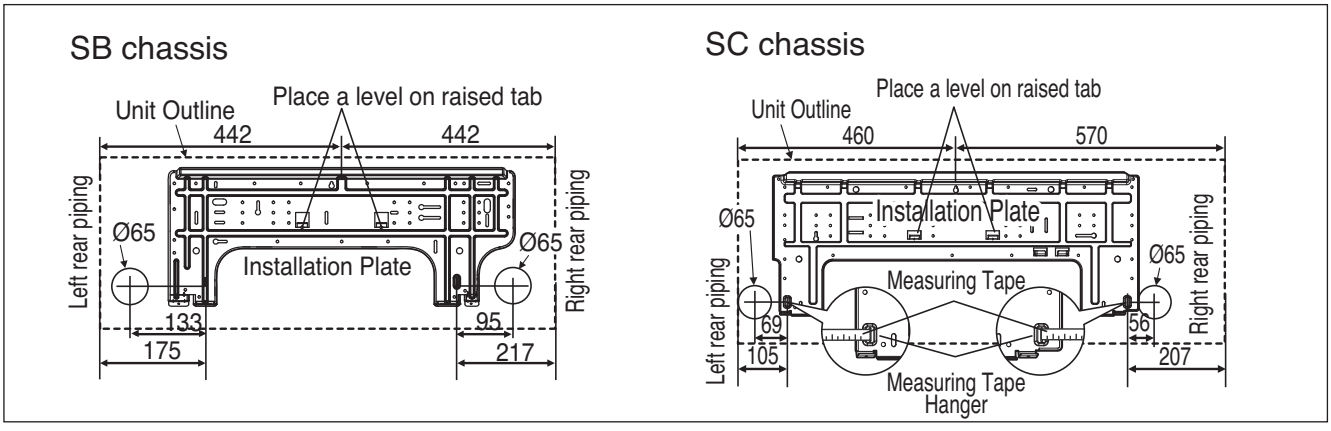

CAUTION : In case that the unit is installed near the sea, the installation parts may be corroded by salt. The installation parts (and the unit) should be taken appropriate anti-corrosion measures.

10.2 Connection of pipes and cables

10.2.1 Preparing work for installation

■ Pull the screw cap at the bottom of the indoor unit
■ Remove the chassis cover from the unit by loosing 2 screws

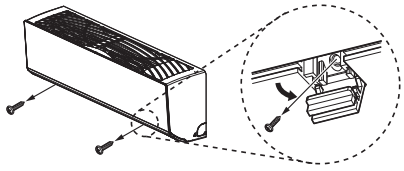

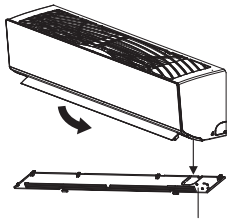

■ Pull back the tubing holder.
■ Remove pipe port cover and positioning the tubing

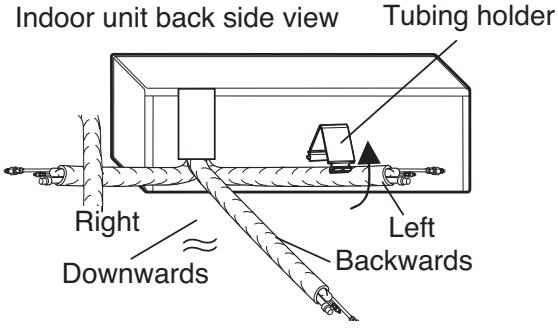

❊ The feature can be changed according to type of model.

Good case

1. Press on the tubing cover and unfold the tubing to downward slowly. And then bend to the left side slowly.

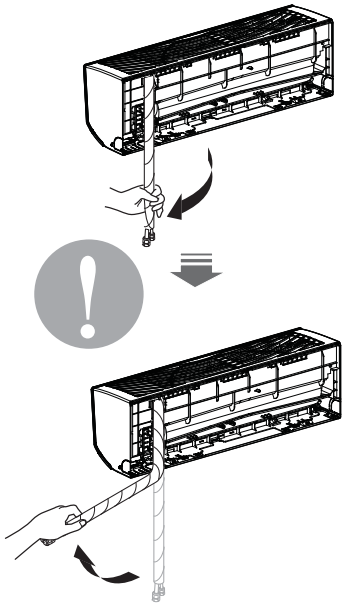

Bad case

1. Following bending case from right to left directly may cause damage to the tubing.

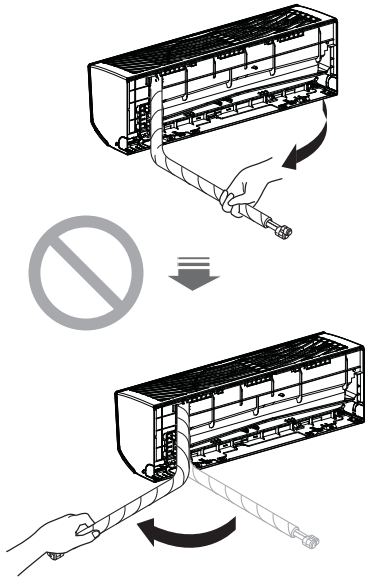

❊ The feature can be changed according to type of model.

⚠ CAUTION

Installation Information. For right piping. Follow the instruction above.

10.2.2 Installation of Indoor Unit

1. Hook the indoor unit onto the upper portion of the installation plate.(engage the three hooks at the top of the indoor unit with the upper edge of the installation plate) Ensure that the hooks are properly seated on the installation plate by moving it left and right

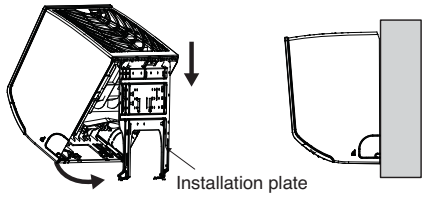

2. Unlock the tubing holder from the chassis and mount between the chassis and installation plate in order to separate the bottom side of the indoor unit from the wall.

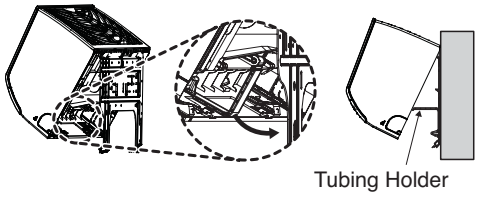

* The feature can be changed according to type of model.

Connecting the cables

1. Insert the connecting cable through the bottom side of indoor unit and connect the cable (You can see detail contents in 'Connecting the cables' section)

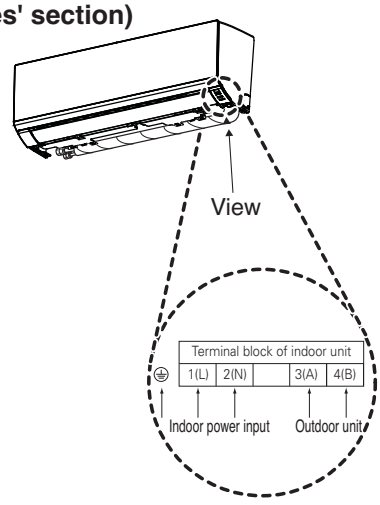

2. Secure the cable onto the control board with the cable retainer.

Connecting the installation pipe and drain hose to the indoor unit.

1. Align the center of the pipes and sufficiently tighten the flare nut by hand

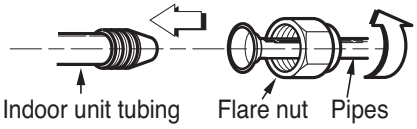

2. Tighten the flare nut with a wrench

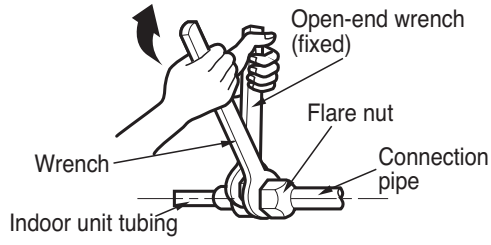

3. When needed to extend the drain hose of indoor unit, assembly the drain pipe as shown on the drawing

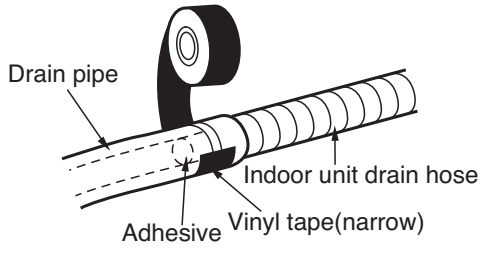

Wrap the insulation material around the connecting portion.

1. Overlap the connection pipe insulation material and the indoor unit pipe insulation material. Bind them together with vinyl tape so that there may be no gap.

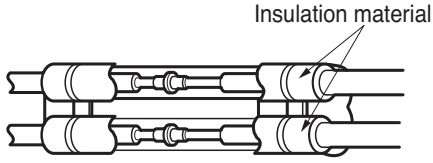

2. Set the tubing cutting line upward. Wrap the area which accommodates the rear piping housing section with vinyl tape.

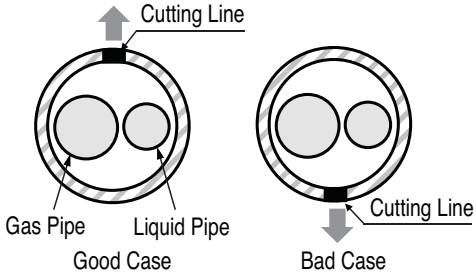

* Tubing cutting line have to be upward.

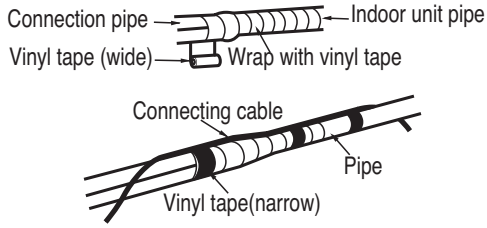

3. Bundle the piping and drain hose together by wrapping them with vinyl tape sufficient enough to cover where they fit into the rear piping housing section. Be sure that the drain hose is located at the lowest side of the bundle. Locating at the upper side can cause overflow from the drain pan through the inside of the unit.

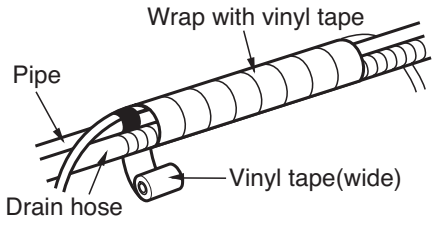

⚠ CAUTION

If the drain hose is routed inside the room insulate the hose with an insulation material* so that dripping from sweating condensation) will not damage furniture or floors.

* Foamed polyethylene or equivalent is recommended.

10.2.3 Finishing the indoor unit installation

1. Mount the tubing holder in the original positon.
2. Ensure that the hooks are properly seated on the installation plate by moving it left and right.
3. Press the lower left and right sides of the unit against the installation plate until the hooks engage into their slots (clicking sound).
4. Finish the assembly by screwing the unit to the installation plate by using two pieces of type "C" screws. And assemble a chassis cover.

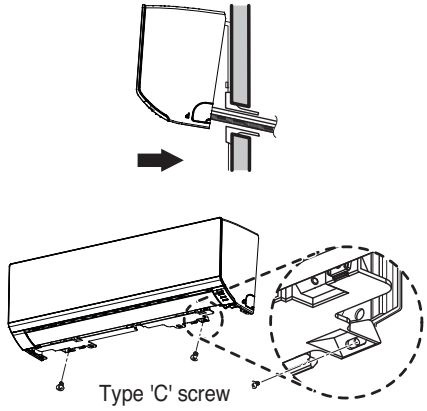

10.2.4 Checking the Drainage

To check the drainage.

1. Pour a glass of water on the evaporator.
2. Ensure the water flows through the drain hose of the indoor unit without any leakage and goes out the drain exit.

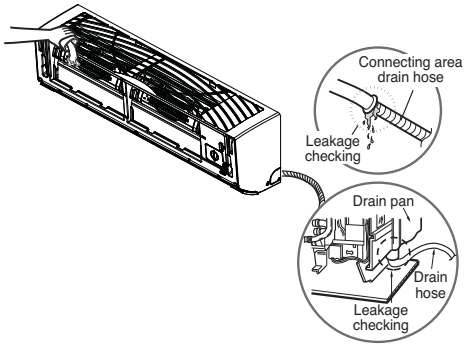

Drain piping

1. The drain hose should point downward for easy drain flow.

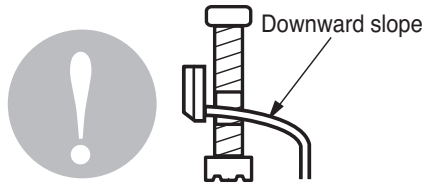

2. Do not make drain piping like the following.

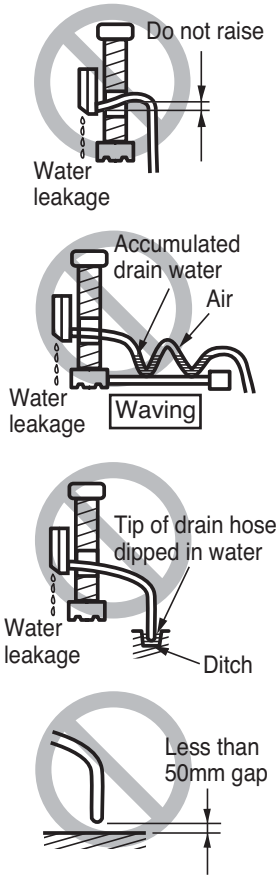

* The feature can be changed according to type of model.

10.3 Wiring the cable to the indoor units

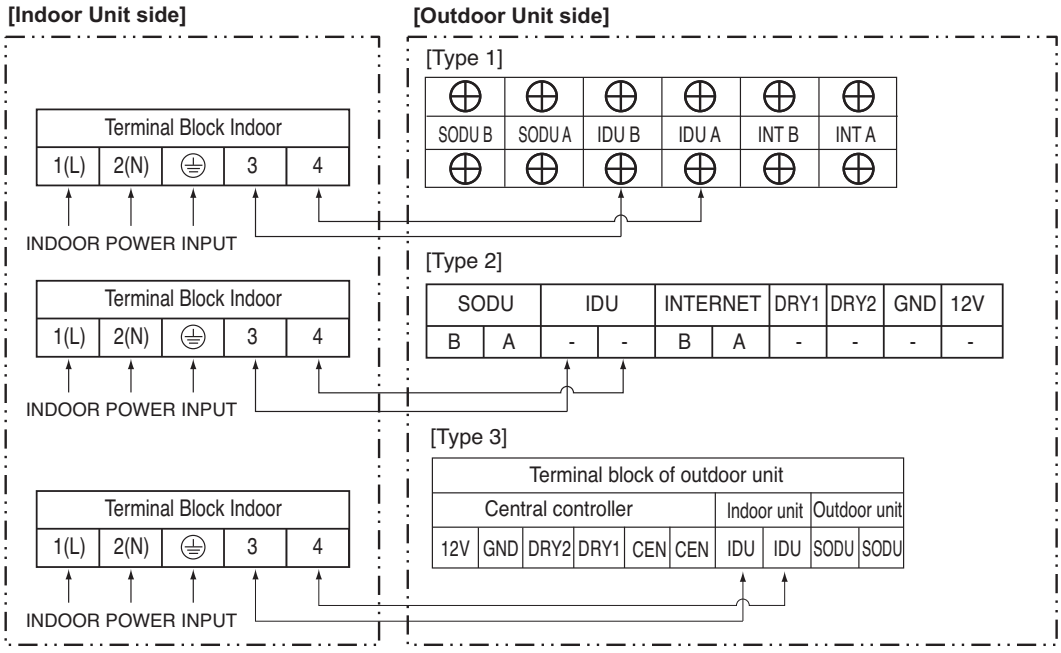

⚠ WARNING

Make sure that the screws of the terminal are free from looseness.

⚠ CAUTION

The Power cord connected to the unit should be selected according to the following specifications.

⚠ CAUTION

After the confirmation of the above conditions, prepare the wiring as follows:

1) Never fail to have separate power specially for the air conditioner. As for the method of wiring, follow the circuit diagram pasted on the inside of control box cover.
2) Provide a circuit breaker switch between power source and the unit.
3) The screw which fasten the wiring in the casing of electrical fittings are liable to come loose from vibrations to which the unit is subjected during the course of transportation. Check them and make sure that they are all tightly fastened. (If they are loose, it could give rise to burn-out of the wires.)
4) Confirm the Specification of power source
5) Confirm that electrical capacity is sufficient.
6) Be sure that the starting voltage is maintained at more than 90 percent of the rated voltage marked on the name plate.
7) Confirm that the cable thickness is as specified in the power sources specification.
   (Particularly note the relation between cable length and thickness.)
8) Do not install the leakage breaker in a place which is wet or moist.
   Water or moist may cause short circuit.
9) The following troubles would be caused by voltage drop-down.
   - Vibration of a magnetic switch, damage on the contact point there of, fuse breaking, disturbance to the normal function of a overload protection device.
   - Proper starting power is not given to the compressor.

WIRED REMOTE CONTROLLER INSTALLATION

• Since the room temperature sensor is in the remote controller, the remote controller box should be installed in a place away from direct sunlight, high humidity and direct supply of cold air to maintain proper space temperature.
Install the remote controller about 5ft(1.5m) above the floor in an area with good air circulation at an average temperature.

Do not install the remote controller where it can be affected by:

- Drafts, or dead spots behind doors and in corners.
- Hot or cold air from ducts.
- Radiant heat from sun or appliances.
- Concealed pipes and chimneys.
- Uncontrolled areas such as an outside wall behind the remote controller.
- This remote controller is equipped with a seven segment LED. display. For proper display of the remote controller LED's, the remote controller should be installed properly as shown in Fig.1.
(The standard height is 1.2~1.5 m from floor level.)

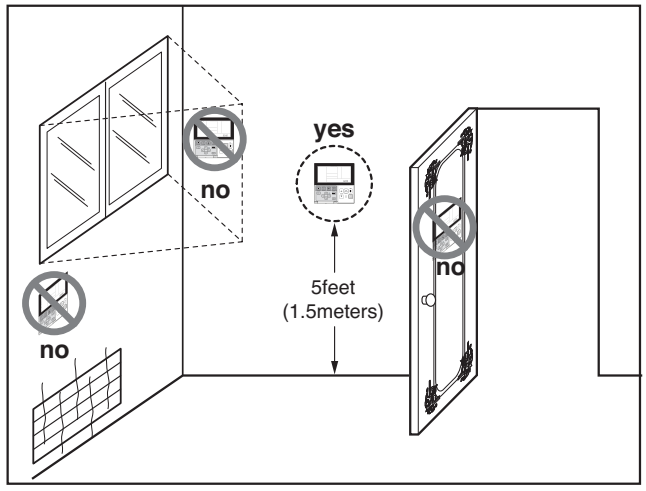

Fig.1 Typical locations for remote controller

11. Accessories

Standard Accessories

Name	Installation panel	Type "A" screws and plastic anchors	Type “C” screws	(Other)
Quantity	1 set	5 set	2 set	
Shape	SB/SC 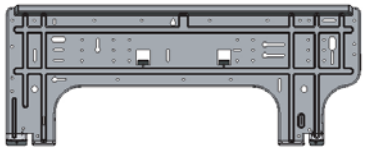		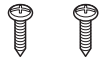	• Owner's manual • Installation manual

MULTI V™ Indoor unit

ARTCOOL (Gallery)

1. List of functions
2. Specifications
3. Dimensions
4. Piping Diagrams
5. Wiring Diagrams
6. Capacity Tables
7. Air Velocity and Temperature Distribution
8. Electric Characteristics
9. Sound Levels
10. Installation
11. Accessories

1. List of functions

Category	Function	ARNU07GSF14, ARNU09GSF14, ARNU12GSF14
Air flow	Air supply outlet	3
	Airflow direction control(left & right)	X
	Airflow direction control(up & down)	Auto
	Auto swing(left & right)	X
	Auto swing(up & down)	O
	Airflow steps(fan/cool/heat)	3 / 4 / 3
	Chaos swing	X
	Chaos wind(auto wind)	O
	Jet cool(Power wind)	O
	Swirl wind	-
Air purifying	Deodorizing filter	X
	Plasma air purifier	O
	Prefilter(washable / anti-fungus)	O
Installation	Drain pump	-
	E.S.P. control	-
	Electric heater(operation)	-
	High ceiling operation	-
Reliability	Hot start	O
	Self diagnosis	O
	Soft dry operation	O
Convenience	Auto changeover	O(Heat recovery)
	Auto cleaning	O
	Auto operation(artificial intelligence)	O(Heat pump or Cooling only)
	Auto restart operation	O
	Child lock	O
	Forced operation	O
	Group control	O
	Sleep mode	O
	Timer(on/off)	O
	Timer(weekly)	O
	Two thermistor control	O
Individual control	Wide wired remote controller (RS2)	PQRCVSL0/PQRCVSL0QW
	Wide wired remote controller (RS2 Plus)	PREMTB001/PREMTBB01
	Premium wired remote controller	PREMTA000/PREMTA000A/PREMTA000B
	Simple wired remote controller	PQRCVCL0Q(W)
	Wired remote controller(for hotel use)	PQRCHCA0Q(W)
	Wireless LCD remote control	PQWRH(C)Q0FDB
Special function kit	Zone control	-
	CTIE	-
	Electro thermostat	-
	Remote temperature sensor	-
	Group control wire	PZCWRCG3
	Dry contact	PDRYCB000/PDRYCB100/PDRYCB300/PDRYCB400/PDRYCB500

O : Applied X : Not applied – : No relation

Option : Model name & price are different according to options, and assembled in factory with main unit.

Accessory : Installed at field, ordered and purchased separately by the corresponding model name, supplied with separate package.

2. Specifications

Type			ARTCOOL Gallery		
Model		Unit	ARNU07GSF14	ARNU09GSF14	ARNU12GSF14
Cooling Capacity		kW	2.2	2.8	3.6
		kcal/h	1,900	2,400	3,100
		Btu/h	7,500	9,600	12,300
Heating Capacity		kW	2.5	3.2	4.0
		kcal/h	2,200	2,800	3,400
		Btu/h	8,500	10,900	13,600
Dimensions(WxHxD)	Body	mm	600 x 600 x 146	600 x 600 x 146	600 x 600 x 146
		inch	23-5/8 x 23-5/8 x 5-25/32	23-5/8 x 23-5/8 x 5-25/32	23-5/8 x 23-5/8 x 5-25/32
Coil	Rows x Columns x FPI		2x20x21	2x20x21	2x20x21
	Face Area	m^2	0.18	0.18	0.18
Fan	Type		Turbo Fan	Turbo Fan	Turbo Fan
	Motor Output x Number	W	30	30	30
	Running Current	A	0.16	0.16	0.16
	Air Flow Rate(H / M / L)	CMM	8.1 / 6.3 / 4.2	8.1 / 6.3 / 4.2	9.3 / 7.7 / 6.0
		cfm	286 / 222 / 148	286 / 222 / 148	328 / 272 / 212
	Drive		Direct	Direct	Direct
	Motor type		BLDC	BLDC	BLDC
Temperature Control			Microprocessor, Thermostat for cooling and heating	Microprocessor, Thermostat for cooling and heating	Microprocessor, Thermostat for cooling and heating
Sound Absorbing Thermal Insulation Material			Foamed polystrene	Foamed polystrene	Foamed polystrene
Air Filter			Resin Net(washable)	Resin Net(washable)	Resin Net(washable)
Safety Device			Fuse	Fuse	Fuse
Pipe Connections	Liquid Side	mm(inch)	Ø6.35(1/4)	Ø6.35(1/4)	Ø6.35(1/4)
	Gas Side	mm(inch)	Ø12.7(1/2)	Ø12.7(1/2)	Ø12.7(1/2)
	Drain Pipe(Internal Dia.)	mm(inch)	12.2(15/32)	12.2(15/32)	12.2(15/32)
Net Weight		kg(lbs)	15(33.1)	15(33.1)	15(33.1)
Noise Level(Sound Press, 1m, H / M / L)		dB(A)	38 / 32 / 27	38 / 32 / 27	44 / 38 / 32
Power Supply		Ø, V, Hz	1, 220-240, 50	1, 220-240, 50	1, 220-240, 50
			1, 220, 60	1, 220, 60	1, 220, 60
Refrigerant Control			EEV	EEV	EEV
Transmission cable		mm^2	CVV-SB 1.0~1.5 x 2C	CVV-SB 1.0~1.5 x 2C	CVV-SB 1.0~1.5 x 2C
Front Panel			1: Kiss (Photo changeable)		

Notes:

1. Capacities are based on the following conditions:
   - Cooling
     - Indoor temp. 27°C[80.6°F]DB/ 19°C[66.2°F]WB
     - Outdoor temp. 35°C[95°F]DB/ 24°C[75.2°F]WB
     - Interconnecting Piping Length 7.5m
     - Level Difference of Zero
   - Heating
     - Indoor temp. 20°C[68°F]DB/ 15°C[59°F]WB
     - Outdoor temp. 7°C[44.6°F]DB/ 6°C[42.8°F]WB
     - Interconnecting Piping Length 7.5m
     - Level Difference of Zero
2. Capacities are Net Capacities
3. Due to our policy of innovation some specifications may be changed without prior notification
4. Wiring cable size must comply with the applicable local and national codes. And “Electric characteristics” chapter should be considered for electrical work and design. Especially the power cable and circuit breaker should be selected in accordance with that.
5. EEV: Electronic Expansion Valve
6. Anechoic chamber conversion value is measured at 1.5 m downward from unit centre.
   The values depends on the ambient conditions and values are normally higher in actual operation.

Conversion Formula
kcal/h= kW x 860
Btu/h = kW x 3412
cfm = m^3/min x 35.3
l/s = CMM x 1000/60

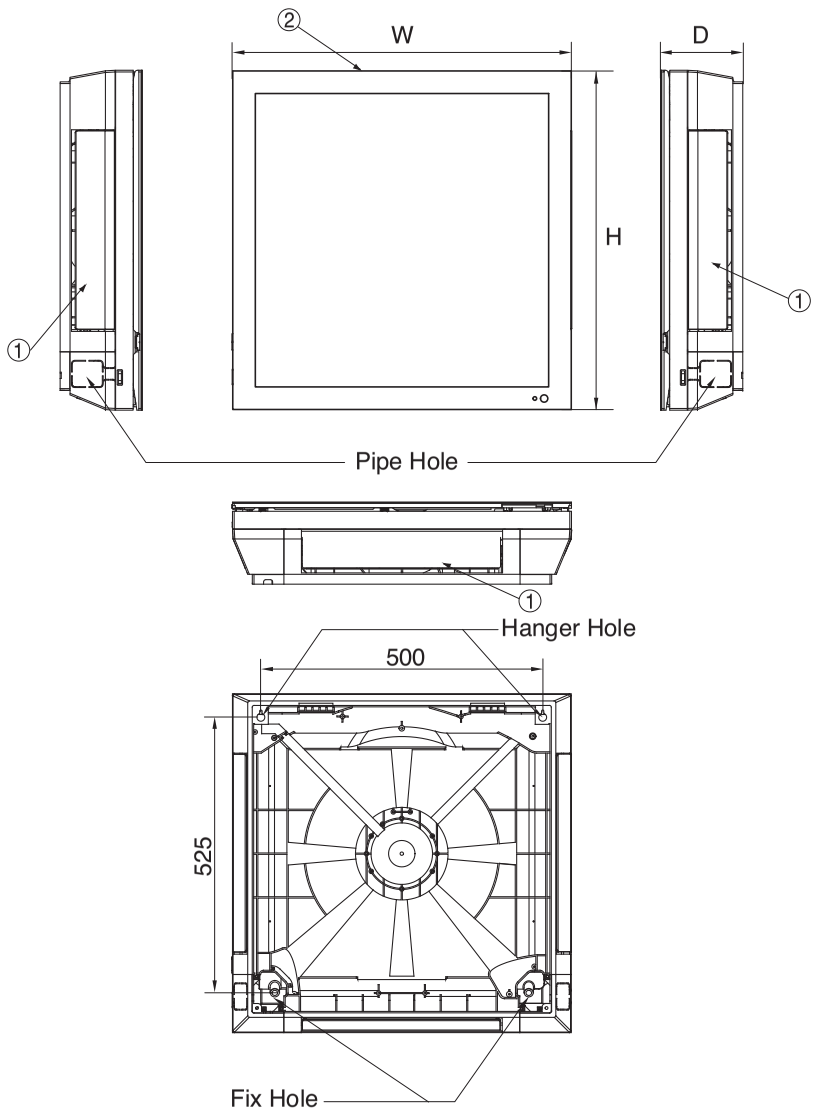

ARTCOOL Gallery

ARNU07GSF14
ARNU09GSF14
ARNU12GSF14

(unit : mm)

Model	W	H	D
ARNU07GSF14 ARNU09GSF14 ARNU12GSF14	600	600	146

(unit : mm)

Number	Name	Descripition
1	Air discharge grill	
2	Air suction grill	

▣ Note

1. Unit should be installed in compliance with the installation manual in the product box.
2. Unit shall be grounded in accordance with the local regulations or applicable national codes.

LG Electronics

CHASSIS CODE: SF

4. Piping Diagrams

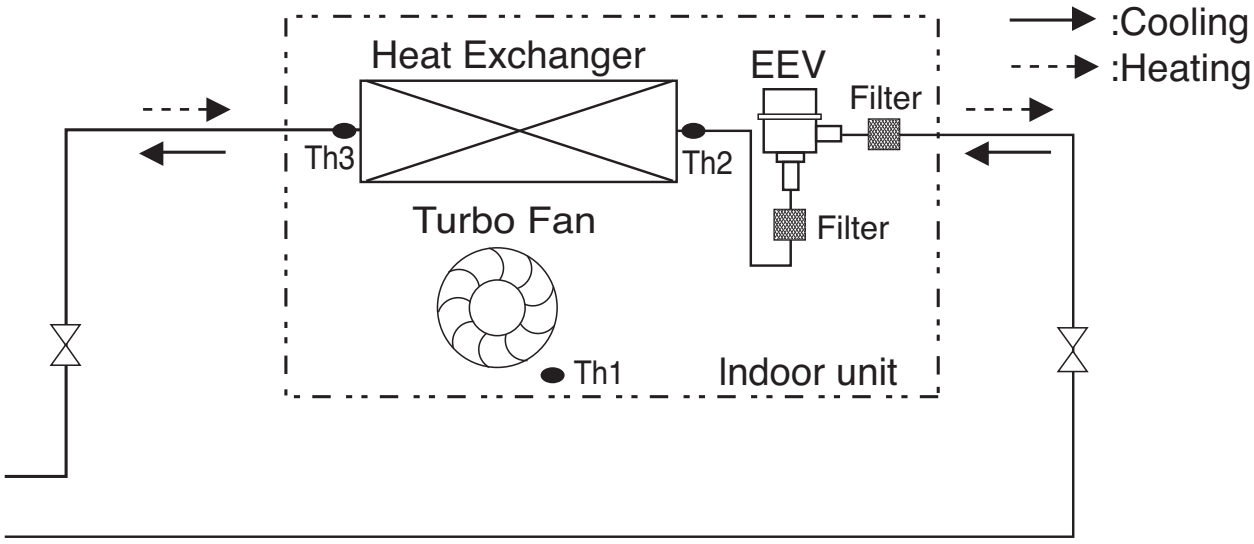

Refrigerant pipe connection port diameter

[Unit: mm(inch)]

Model	Gas	Liquid
ARNU07GSF14	Ø12.7(1/2)	Ø6.35(1/4)
ARNU09GSF14	Ø12.7(1/2)	Ø6.35(1/4)
ARNU12GSF14	Ø12.7(1/2)	Ø6.35(1/4)

*Panel color :E(Red), V(Silver), G(Gold), 1(Kiss (Photo changeable))

LOC.	Description	PCB Connector
Th1	Thermistor for inlet air temperature	CN-TH1
Th2	Thermistor for EVA. in temperature	
Th3	Thermistor for EVA. out temperature	CN-TH2

5. Wiring Diagrams

SF Chassis

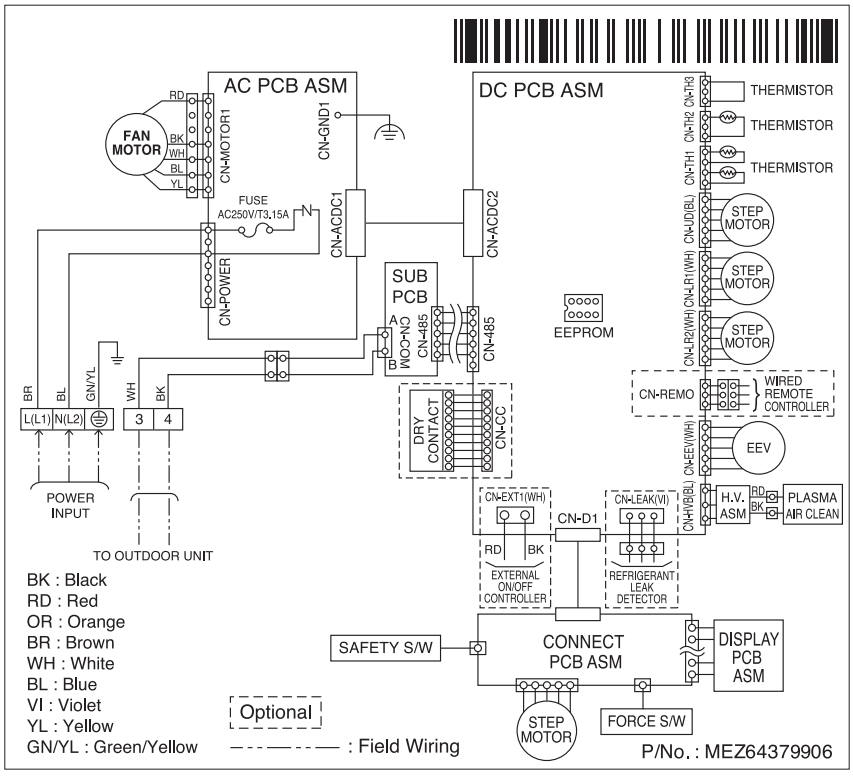

CONNECTOR NUMBER	LOCATION POINT	FUNCTION
CN-POWER	AC Power supply	AC Power line input for indoor
CN-MOTOR1	Fan motor output	Motor output of BLDC
CN-485	Communication	Connection between indoor
CN-EEV	EEV output	EEV control output
CN-UD	Step motor	Step motor output
CN-LR1	Step motor	Step motor output
CN-LR2	Step motor	Step motor output
CN-TH1	Room/inlet pipe sensor	Room and inlet pipe thermistor
CN-TH2	Outlet pipe sensor	Outlet pipe thermistor
CN-REMO	Remote controller	Remote control line
CN-CC	Dry contact	Dry contact line
CN-HVB	Air clean	Air clean control
CN-EXT1	External On/Off	External On/Off signal input
CN-LEAK(VI)	Refrigerant leak detector	Refrigerant leak detector line

6. Capacity Tables

6.1 Cooling Capacity

Cooling Capacity

Capacity Index	Outdoor air temp. (DB, °C)	Indoor air temp. (DB/WB, °C)													
		20		23		26		27		28		30		32	
		14		16		18		19		20		22		24	
		TC	SHC	TC	SHC	TC	SHC	TC	SHC	TC	SHC	TC	SHC	TC	SHC
		kW	kW	kW	kW	kW	kW	kW	kW	kW	kW	kW	kW	kW	kW
2.2	10	1.5	1.3	1.8	1.4	2.1	1.5	2.2	1.6	2.3	1.6	2.6	1.7	2.9	1.7
	12	1.5	1.3	1.8	1.4	2.1	1.5	2.2	1.6	2.3	1.6	2.6	1.7	2.9	1.6
	14	1.5	1.3	1.8	1.4	2.1	1.5	2.2	1.6	2.3	1.6	2.6	1.7	2.8	1.6
	16	1.5	1.3	1.8	1.4	2.1	1.5	2.2	1.6	2.3	1.6	2.6	1.7	2.8	1.6
	18	1.5	1.3	1.8	1.4	2.1	1.5	2.2	1.6	2.3	1.6	2.6	1.7	2.7	1.6
	20	1.5	1.3	1.8	1.4	2.1	1.5	2.2	1.6	2.3	1.6	2.6	1.7	2.7	1.6
	21	1.5	1.3	1.8	1.4	2.1	1.5	2.2	1.6	2.3	1.6	2.6	1.7	2.7	1.5
	23	1.5	1.3	1.8	1.4	2.1	1.5	2.2	1.6	2.3	1.6	2.6	1.7	2.6	1.5
	25	1.5	1.3	1.8	1.4	2.1	1.5	2.2	1.6	2.3	1.6	2.6	1.7	2.6	1.5
	27	1.5	1.3	1.8	1.4	2.1	1.5	2.2	1.6	2.3	1.6	2.5	1.6	2.6	1.5
	29	1.5	1.3	1.8	1.4	2.1	1.5	2.2	1.6	2.3	1.6	2.5	1.6	2.5	1.5
	31	1.5	1.3	1.8	1.4	2.1	1.5	2.2	1.6	2.3	1.6	2.5	1.6	2.5	1.4
	33	1.5	1.3	1.8	1.4	2.1	1.5	2.2	1.6	2.3	1.6	2.4	1.5	2.5	1.4
	35	1.5	1.3	1.8	1.4	2.1	1.5	2.2	1.6	2.3	1.6	2.4	1.5	2.4	1.4
	37	1.5	1.3	1.8	1.4	2.1	1.5	2.2	1.6	2.3	1.6	2.3	1.5	2.4	1.4
	39	1.5	1.3	1.8	1.4	2.1	1.5	2.2	1.6	2.2	1.5	2.3	1.5	2.3	1.4
2.8	10	1.9	1.6	2.3	1.8	2.6	2.0	2.8	2.0	3.0	2.0	3.4	2.1	3.7	2.1
	12	1.9	1.6	2.3	1.8	2.6	2.0	2.8	2.0	3.0	2.0	3.4	2.1	3.6	2.1
	14	1.9	1.6	2.3	1.8	2.6	2.0	2.8	2.0	3.0	2.0	3.4	2.1	3.6	2.1
	16	1.9	1.6	2.3	1.8	2.6	2.0	2.8	2.0	3.0	2.0	3.4	2.1	3.5	2.0
	18	1.9	1.6	2.3	1.8	2.6	2.0	2.8	2.0	3.0	2.0	3.4	2.1	3.5	2.0
	20	1.9	1.6	2.3	1.8	2.6	2.0	2.8	2.0	3.0	2.0	3.4	2.1	3.4	2.0
	21	1.9	1.6	2.3	1.8	2.6	2.0	2.8	2.0	3.0	2.0	3.4	2.1	3.4	2.0
	23	1.9	1.6	2.3	1.8	2.6	2.0	2.8	2.0	3.0	2.0	3.4	2.1	3.4	1.9
	25	1.9	1.6	2.3	1.8	2.6	2.0	2.8	2.0	3.0	2.0	3.3	2.1	3.3	1.9
	27	1.9	1.6	2.3	1.8	2.6	2.0	2.8	2.0	3.0	2.0	3.2	2.1	3.3	1.9
	29	1.9	1.6	2.3	1.8	2.6	2.0	2.8	2.0	3.0	2.0	3.2	2.0	3.2	1.9
	31	1.9	1.6	2.3	1.8	2.6	2.0	2.8	2.0	3.0	2.0	3.1	2.0	3.2	1.8
	33	1.9	1.6	2.3	1.8	2.6	2.0	2.8	2.0	3.0	2.0	3.1	2.0	3.1	1.8
	35	1.9	1.6	2.3	1.8	2.6	2.0	2.8	2.0	3.0	2.0	3.0	1.9	3.1	1.8
	37	1.9	1.6	2.3	1.8	2.6	2.0	2.8	2.0	2.9	2.0	3.0	1.9	3.0	1.8
	39	1.9	1.6	2.3	1.8	2.6	2.0	2.8	2.0	2.9	2.0	2.9	1.9	3.0	1.7
3.6	10	2.4	2.1	2.9	2.4	3.4	2.6	3.6	2.6	3.8	2.7	4.3	2.8	4.7	2.8
	12	2.4	2.1	2.9	2.4	3.4	2.6	3.6	2.6	3.8	2.7	4.3	2.8	4.7	2.7
	14	2.4	2.1	2.9	2.4	3.4	2.6	3.6	2.6	3.8	2.7	4.3	2.8	4.6	2.7
	16	2.4	2.1	2.9	2.4	3.4	2.6	3.6	2.6	3.8	2.7	4.3	2.8	4.6	2.7
	18	2.4	2.1	2.9	2.4	3.4	2.6	3.6	2.6	3.8	2.7	4.3	2.8	4.5	2.6
	20	2.4	2.1	2.9	2.4	3.4	2.6	3.6	2.6	3.8	2.7	4.3	2.8	4.4	2.6
	21	2.4	2.1	2.9	2.4	3.4	2.6	3.6	2.6	3.8	2.7	4.3	2.8	4.4	2.6
	23	2.4	2.1	2.9	2.4	3.4	2.6	3.6	2.6	3.8	2.7	4.3	2.8	4.3	2.5
	25	2.4	2.1	2.9	2.4	3.4	2.6	3.6	2.6	3.8	2.7	4.2	2.8	4.3	2.5
	27	2.4	2.1	2.9	2.4	3.4	2.6	3.6	2.6	3.8	2.7	4.1	2.7	4.2	2.5
	29	2.4	2.1	2.9	2.4	3.4	2.6	3.6	2.6	3.8	2.7	4.1	2.7	4.2	2.4
	31	2.4	2.1	2.9	2.4	3.4	2.6	3.6	2.6	3.8	2.7	4.0	2.6	4.1	2.4
	33	2.4	2.1	2.9	2.4	3.4	2.6	3.6	2.6	3.8	2.7	4.0	2.6	4.0	2.4
	35	2.4	2.1	2.9	2.4	3.4	2.6	3.6	2.6	3.8	2.7	3.9	2.5	4.0	2.3
	37	2.4	2.1	2.9	2.4	3.4	2.6	3.6	2.6	3.7	2.6	3.8	2.5	3.9	2.3
	39	2.4	2.1	2.9	2.4	3.4	2.6	3.6	2.6	3.7	2.6	3.7	2.4	3.8	2.2

Notes:

TC: Total Capacity(kW)

SHC: Sensible Heat Capacity(kW)

1. Capacity tables show the representative value of conditions which may occur.
2. Refer to Capacity Correction Factor in the outdoor unit PDB for the actual performance data of each indoor unit and outdoor unit combination.

6. Capacity Tables

6.2 Heating Capacity

Heating Capacity

Capacity Index	Outdoor air temp.		Indoor air temp. (DB, °C)					
			16	18	20	21	22	24
	DB(°C)	WB(°C)	TC	TC	TC	TC	TC	TC
			kW	kW	kW	kW	kW	kW
2.2	-19.8	-20.0	1.8	1.8	1.8	1.8	1.8	1.8
	-18.8	-19.0	1.9	1.9	1.9	1.9	1.9	1.9
	-16.7	-17.0	2.0	2.0	2.0	2.0	2.0	2.0
	-14.7	-15.0	2.1	2.1	2.1	2.1	2.1	2.0
	-12.6	-13.0	2.2	2.2	2.2	2.2	2.1	2.1
	-10.5	-11.0	2.3	2.3	2.2	2.2	2.2	2.2
	-9.5	-10.0	2.3	2.3	2.3	2.3	2.3	2.2
	-8.5	-9.1	2.3	2.3	2.3	2.3	2.3	2.2
	-7.0	-7.6	2.4	2.4	2.4	2.4	2.3	2.2
	-5.0	-5.6	2.5	2.5	2.5	2.4	2.3	2.2
	-3.0	-3.7	2.6	2.6	2.5	2.4	2.3	2.2
	0.0	-0.7	2.7	2.6	2.5	2.4	2.3	2.2
	3.0	2.2	2.7	2.7	2.5	2.4	2.3	2.2
	5.0	4.1	2.8	2.7	2.5	2.4	2.3	2.2
	7.0	6.0	2.8	2.7	2.5	2.4	2.3	2.2
	9.0	7.9	2.8	2.7	2.5	2.4	2.3	2.2
	11.0	9.8	2.8	2.7	2.5	2.4	2.3	2.2
	13.0	11.8	2.8	2.7	2.5	2.4	2.3	2.2
	15.0	13.7	2.8	2.7	2.5	2.4	2.3	2.2
2.8	-19.8	-20.0	2.4	2.4	2.3	2.3	2.3	2.3
	-18.8	-19.0	2.4	2.4	2.4	2.4	2.4	2.4
	-16.7	-17.0	2.5	2.5	2.5	2.5	2.5	2.5
	-14.7	-15.0	2.7	2.7	2.6	2.6	2.6	2.6
	-12.6	-13.0	2.8	2.8	2.8	2.8	2.7	2.7
	-10.5	-11.0	2.9	2.9	2.9	2.9	2.9	2.8
	-9.5	-10.0	3.0	3.0	2.9	2.9	2.9	2.8
	-8.5	-9.1	3.0	3.0	3.0	3.0	3.0	2.8
	-7.0	-7.6	3.1	3.1	3.1	3.1	3.0	2.8
	-5.0	-5.6	3.2	3.2	3.2	3.1	3.0	2.8
	-3.0	-3.7	3.4	3.3	3.2	3.1	3.0	2.8
	0.0	-0.7	3.4	3.3	3.2	3.1	3.0	2.8
	3.0	2.2	3.5	3.4	3.2	3.1	3.0	2.8
	5.0	4.1	3.6	3.4	3.2	3.1	3.0	2.8
	7.0	6.0	3.6	3.4	3.2	3.1	3.0	2.8
	9.0	7.9	3.6	3.4	3.2	3.1	3.0	2.8
	11.0	9.8	3.6	3.4	3.2	3.1	3.0	2.8
	13.0	11.8	3.6	3.4	3.2	3.1	3.0	2.8
	15.0	13.7	3.6	3.4	3.2	3.1	3.0	2.8
3.6	-19.8	-20.0	2.9	2.9	2.9	2.9	2.9	2.9
	-18.8	-19.0	3.0	3.0	3.0	3.0	3.0	3.0
	-16.7	-17.0	3.1	3.1	3.1	3.1	3.1	3.1
	-14.7	-15.0	3.3	3.3	3.3	3.3	3.3	3.3
	-12.6	-13.0	3.5	3.4	3.4	3.4	3.4	3.4
	-10.5	-11.0	3.6	3.6	3.6	3.6	3.6	3.5
	-9.5	-10.0	3.7	3.7	3.7	3.7	3.7	3.5
	-8.5	-9.1	3.8	3.8	3.7	3.7	3.7	3.5
	-7.0	-7.6	3.9	3.9	3.9	3.8	3.7	3.5
	-5.0	-5.6	4.0	4.0	4.0	3.9	3.7	3.5
	-3.0	-3.7	4.2	4.1	4.0	3.9	3.7	3.5
	0.0	-0.7	4.3	4.1	4.0	3.9	3.7	3.5
	3.0	2.2	4.4	4.3	4.0	3.9	3.7	3.5
	5.0	4.1	4.5	4.3	4.0	3.9	3.7	3.5
	7.0	6.0	4.5	4.3	4.0	3.9	3.7	3.5
	9.0	7.9	4.5	4.3	4.0	3.9	3.7	3.5
	11.0	9.8	4.5	4.3	4.0	3.9	3.7	3.5
	13.0	11.8	4.5	4.3	4.0	3.9	3.7	3.5
	15.0	13.7	4.5	4.3	4.0	3.9	3.7	3.5

Notes:
TC: Total Capacity(kW)
1. Capacity tables show the representative value of conditions which may occur.
2. is shown as reference. When selecting the outdoor units, avoid the outdoor air temperature range shown by .
3. In accordance with operation limits of outdoor unit, applicable range of capacity tables is different.
4. Refer to Capacity Correction Factor in the outdoor unit PDB for the actual performance data of each indoor unit and outdoor unit combination.

7. Air Velocity and Temperature Distribution

ARNU07GSF14, ARNU09GSF14

Cooling

Discharge angle:40°

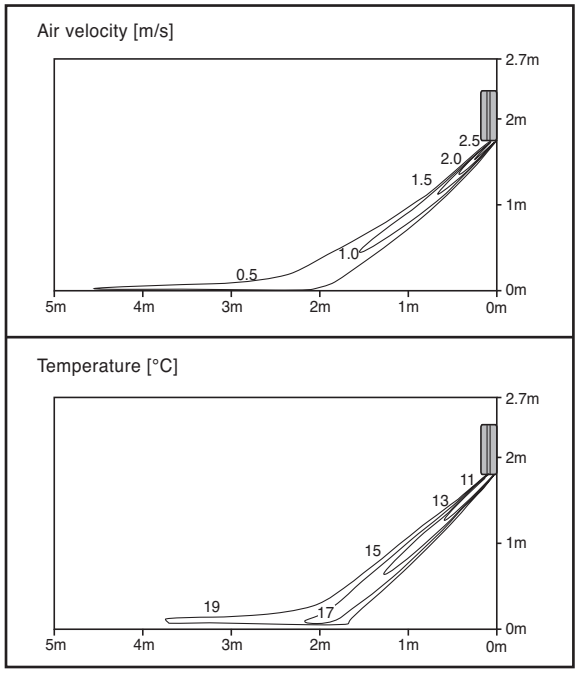

Heating

Discharge angle:50°

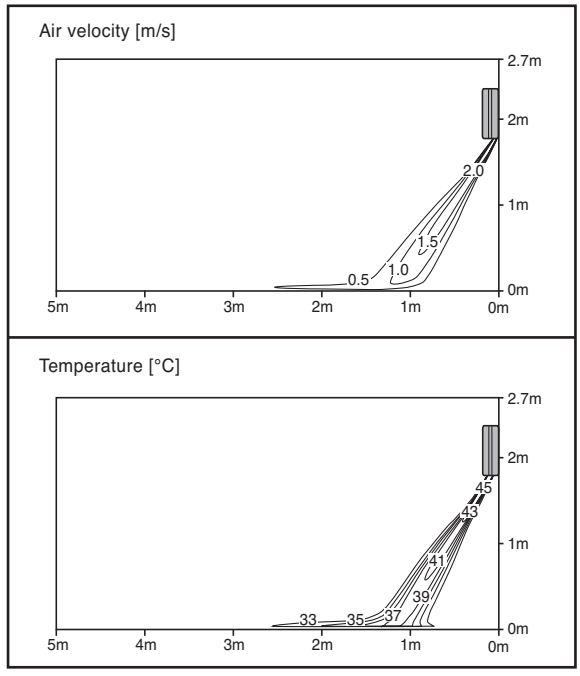

ARNU12GSF14

Cooling

Discharge angle:40°

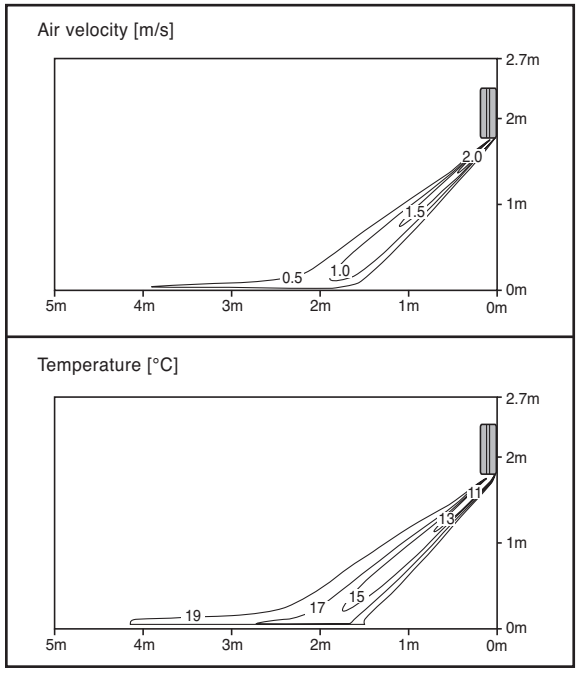

Heating

Discharge angle:50°

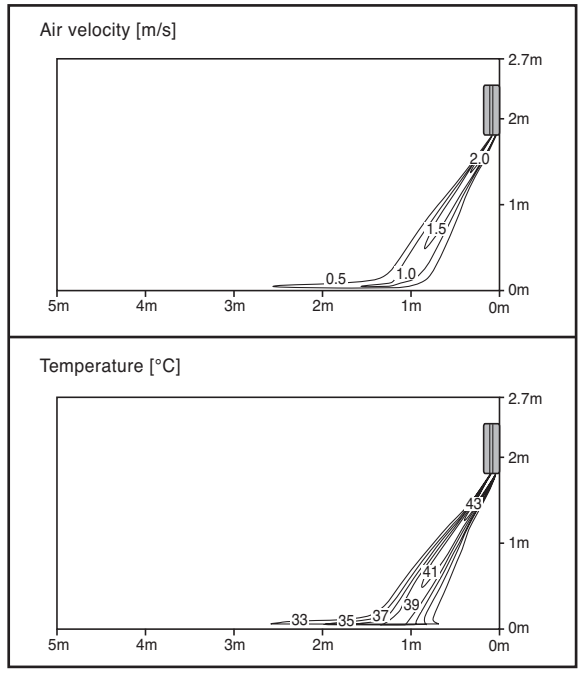

8. Electric Characteristics

Units					Power Supply		IFM		Input(W)	
Model	Type	Hz	Volts	Voltage Range	MCA	MFA	kW	FLA	Cooling	Heating
ARNU07GSF14	SF	50	220 - 240	Max:264 Min:198	0.23	15	0.024	0.18	35	35
ARNU09GSF14	SF				0.23	15	0.024	0.18	35	35
ARNU12GSF14	SF				0.23	15	0.024	0.18	35	35
ARNU07GSF14	SF	60	220	Max:242 Min:198	0.23	15	0.024	0.18	35	35
ARNU09GSF14	SF				0.23	15	0.024	0.18	35	35
ARNU12GSF14	SF				0.23	15	0.024	0.18	35	35

Symbols:

MCA: Minimum Circuit Amperes (A)
MFA : Maximum Fuse Amperes(see note 5)
kW : Fan Motor Rated Output(kW)
FLA : Full Load Amperes(A)
IFM : Indoor Fan Motor

Note :

1. Voltage Range
   Units are suitable for use on electrical system where voltage supplied to unit terminals is not below or above the listed range limits.
2. Maximum allowable voltage unbalance between phase is 2%.
3. MCA/MFA
   MCA = 1.25 x FLA
   MFA ≤ 4 x FLA
   (Next lower standard fuse rating. Minimum 15A)
4. Select wire size based on the MCA.
5. Instead of fuse, use Circuit Breaker.

9. Sound Levels

9.1 Sound Pressure Levels

Overall

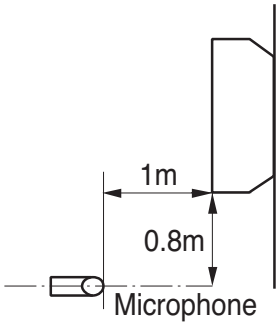

❊ Measuring place : Anechoic chamber

Notes:

1. Sound measured at 1m away from the front and 0.8m away from the bottom of the unit
2. Operating condition
   - Power source : 220-240V 50Hz / 220V 60Hz
   - Cooling : Indoor temperature (27°C DB, 19°C WB), Outdoor temperature (35°C DB, 24°C WB)
   - Heating : Indoor temperature (20°C DB, 15°C WB), Outdoor temperature (7°C DB, 6°C WB)
3. Reference accoustic pressure 0dB = 20μPa
4. Sound level will vary depending on a range of factors such as the construction(acoustic absorption coefficient) of particular room in which the equipment in installed.

Model	Sound Pressure Levels dB(A)		
	H	M	L
ARNU07GSF14	38	32	27
ARNU09GSF14	38	32	27
ARNU12GSF14	44	38	32

ARNU07GSF14
ARNU09GSF14

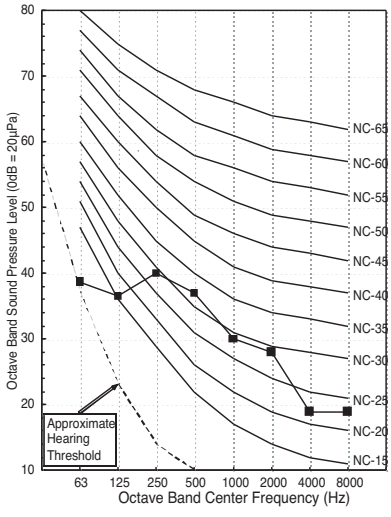

ARNU12GSF14

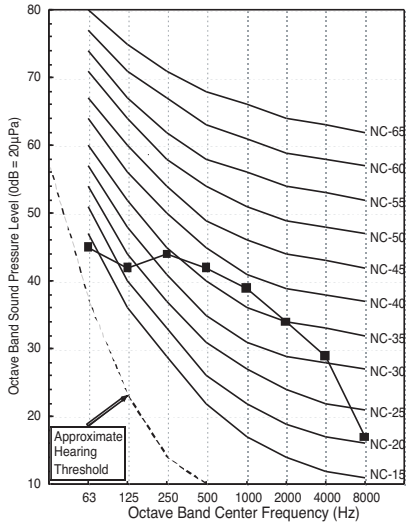

9. Sound Levels

9.2 Sound Power Levels

Model	Sound Power Levels dB(A)
	High Fan Speed
ARNU07GSF14	48.0
ARNU09GSF14	48.0
ARNU12GSF14	54.0

Notes:
- Data is valid at diffuse field condition
- Data is valid at nominal operating condition
- Sound level can be increased in static pressure mode or used air guide.
- Sound power level is measured on the rated condition in the reverberation rooms.
- Sound level will vary depending on a range of factors such as the construction (acoustic absorption coefficient) of particular room in which the equipment in installed.
- Reference acoustic intensity 0dB = 10E-6μW/m^2

ARNU07GSF14
ARNU09GSF14

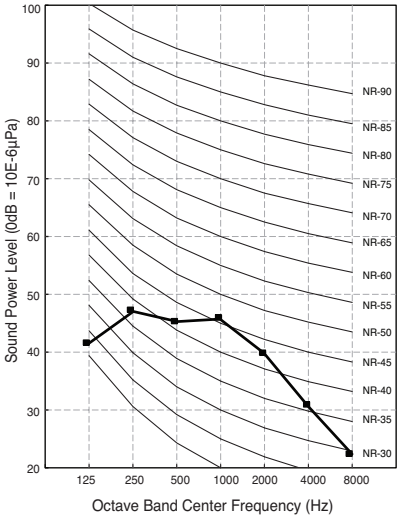

ARNU12GSF14

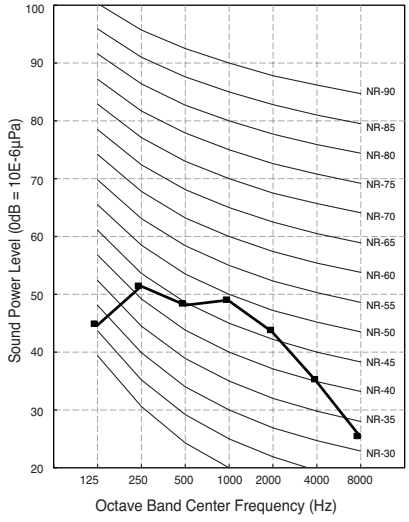

10. Installation

- Please read the instruction sheets completely before installing the product.
- When the power cord is damaged, replacement work shall be performed by authorized personnel only.
- Installation work must be performed in accordance with the national wiring standards by authorized personnel only.

Installation Parts Provided

1. Installation guide map

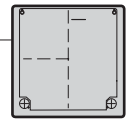

2. Type "A" screw and plastic anchors

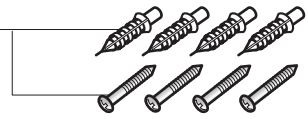

Required Parts

❏ Four type "A" screws
❏ Connecting cable
❏ Pipes: Gas side
Liquid side

❏ Insulation materials
❏ Additional drain pipe

Required Tools

❏ Level gauge
❏ Screw driver
❏ Electric drill
❏ Hole core drill
❏ Flaring tool set
❏ Specified torque wrenches
❏ Spanner.....Half union
❏ A glass of water
❏ Screw driver
❏ Thermometer

10.1 Selection of the best location

- Do not have any heat or steam near the unit.
- Select a place where there are no obstacles in front of the unit.
- Make sure that condensation drainage can be conveniently routed away.
  Do not install near a doorway.
- Ensure that the space around the left and right of the unit is more than 500mm. The unit should be installed as high on the wall as possible, allowing a minimum of 120mm from ceiling.
- Use a stud finder to locate studs to prevent unnecessary damage to the wall.

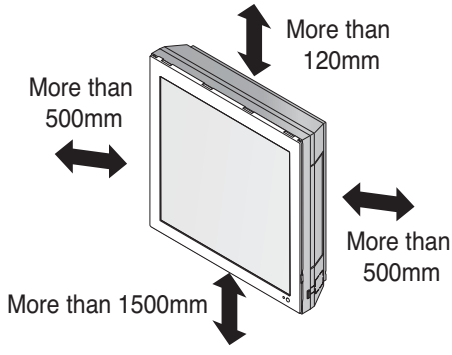

10.2 Preparing Work for Installation

Open panel front

1. Pull the upper part of the front panel.
2. Lift up the panel.
3. To detach the front panel, remove the two screws at the lower part.
4. Detach the front panel from the body.
5. To detach the panel, disconnect the connector at the upper part.

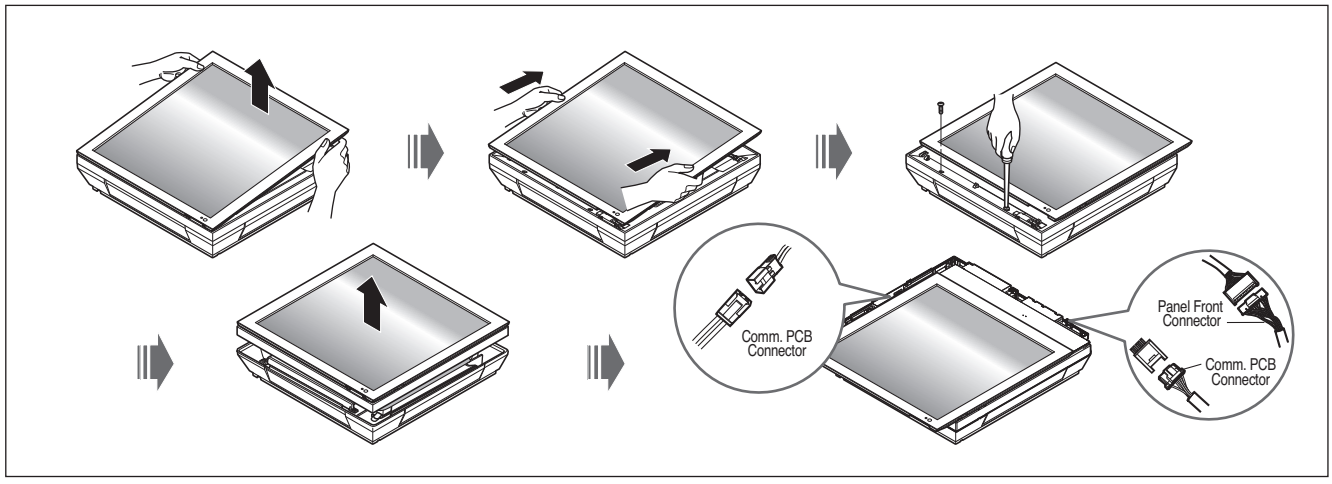

Cover pipe and cover side remove

1. Please remove the screw of the center tuning cover.
2. Pull up the side cover of desired connecting direction, then cover side is separated.
3. Pick the pipe hole of the side cover.

CAUTION: After removing the pipe hole, cut the burr for safety.

NOTICE When making pipe path through rear wall, you don't need to pick the pipe hole.

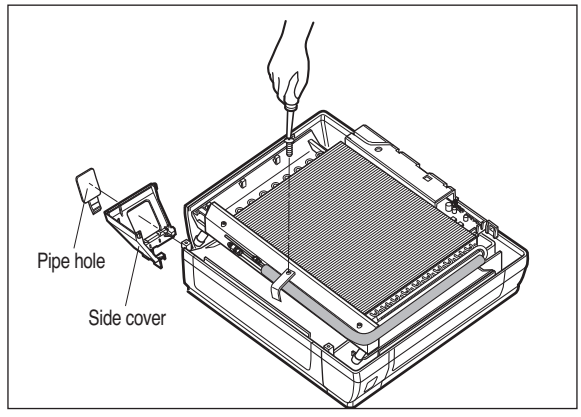

Drain hose junction

1. Remove the rubber stopple in the desired drain direction.
2. Insert drain hose into the handle of drain pan, and join drain hose and connecting hose according to the figure by.

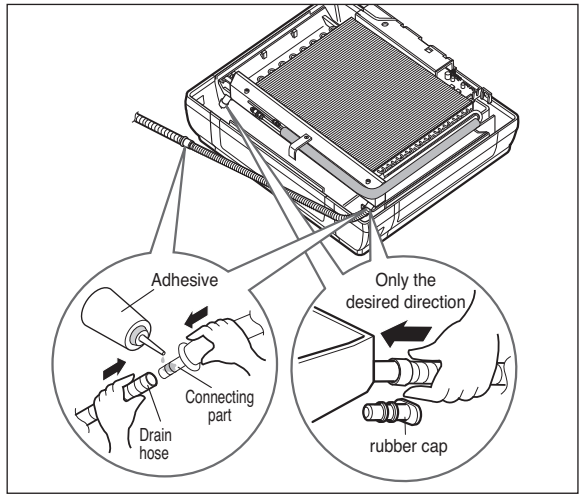

10.3 Fixing Indoor Unit

1. Attach an Installation guide map on the desired surface.

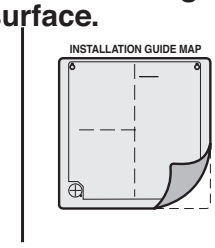

2. Look at suited horizon by horizontal meter on the horizontal setting line, and fix lightly the map by adhesive tape.

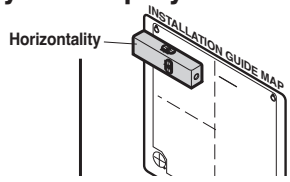

3. Make a hole with a diameter of 6mm and depth of 30-35mm by piercing a screw point.

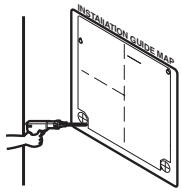

4. Drill the pierted part as a diameter of 50mm for connecting piping. (In case of piercing rear surface)

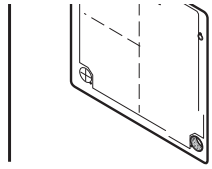

5. Drive the fore plastic anchors into drilled points.

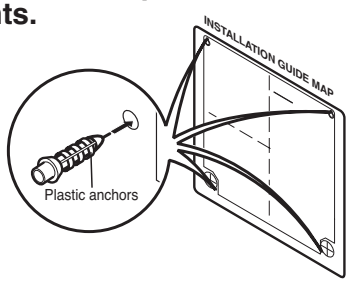

6. First, Drive the two points of the upper parts by screws. (Leave 10mm for hanging the product)

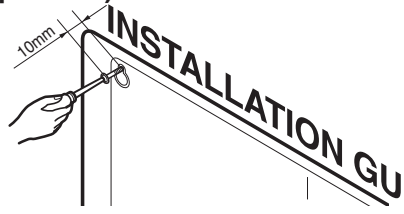

7. Hang the hole of product at the upper screws, and remove the map. (Falling attention)

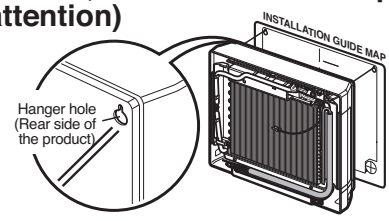

8. Drive the lower parts after facing the hole of product with plastic anchors, and fix completely the upper screws.

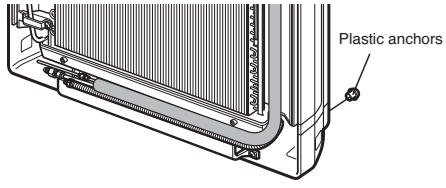

9. Check the fixed product with light power.

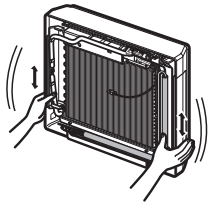

10. In case of nothing wrong, connect the pipe and the wire. (Refer to installation manual)

10.4 Connecting the Piping

Preparing the indoor unit's piping and drain hose for installation through the wall.

1. Route the indoor tubing and the drain hose in the direction of rear left or right

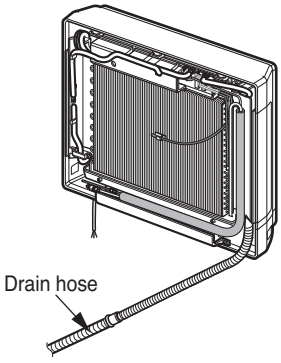

2. Tape the tubing, drain hose and the connecting cable. Be sure that the drain hose is located at the lowest side of the bundle. Locating at the upper side can cause drain pan to overflow inside the unit.

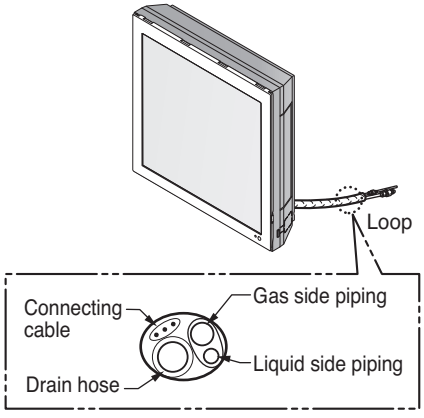

CAUTION: If the drain hose is routed inside the room, insulate the hose with an insulation material* so that dripping from "sweating"(condensation) will not damage furniture or floors.
***Foamed polyethylene or equivalent is recommended.**

3. Connecting the pipings to the in door unit and drain hose to drain pipe

❏ Align the center of the pipings and sufficiently tighten the flare nut by hand.

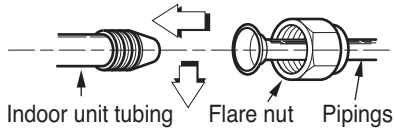

❏ Tighten the flare nut with a wrench.

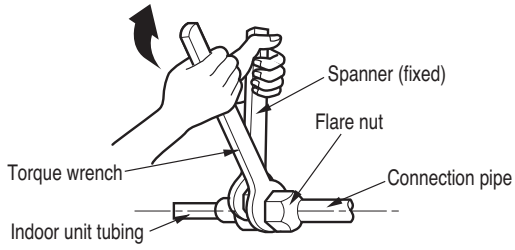

❏ When extending the drain hose at the indoor unit, install the drain pipe.

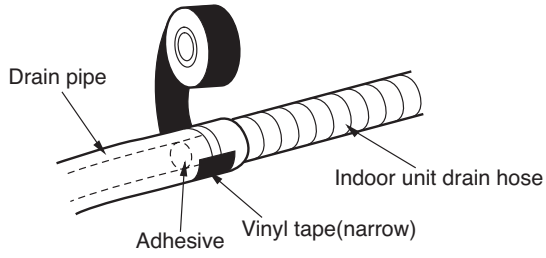

4. Wrap the insulation material around the connecting portion.

❏ Overlap the connecting pipe insulation material and the indoor unit pipe insulation material. Bind them together with vinyl tape so that there is no gap.

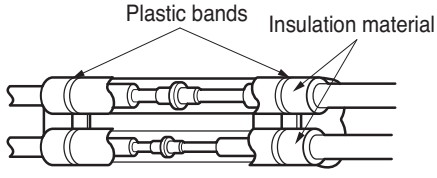

10. Installation

CAUTION: Installation Information
For right piping. Follow the instruction below.

Good case

• Press on the upper side of clamp and unfold the tubing to downward slowly.

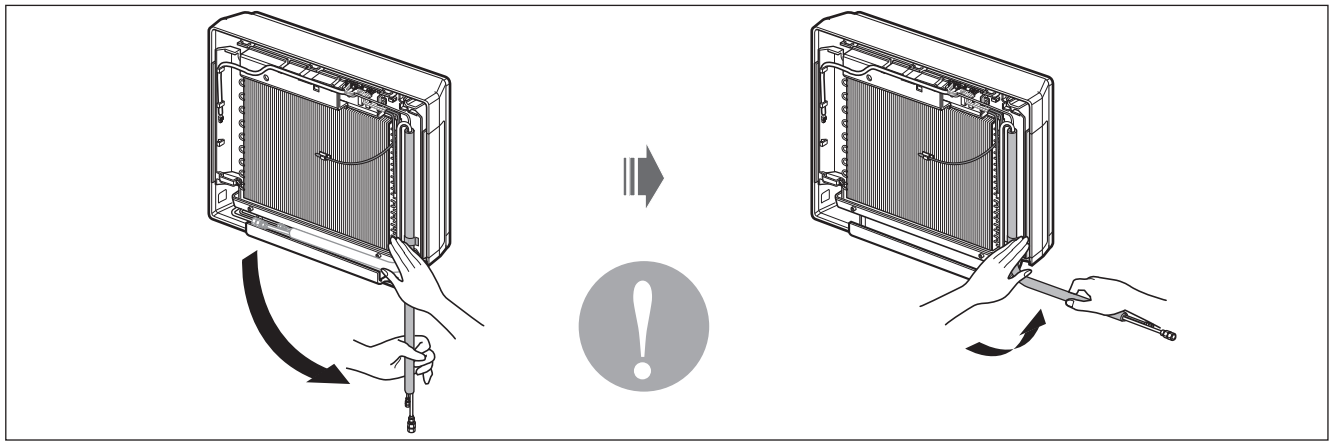

Bad case

• Following bending type from left to right may cause damage to the turbing.

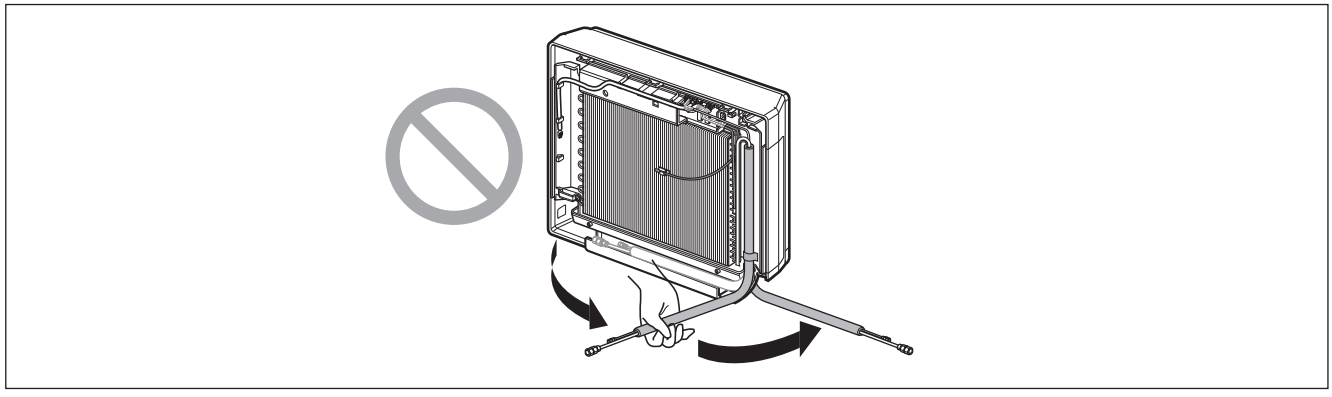

10.5 Drain Piping

1) To check the drainage.

• Pour a glass of water on the evaporator.

• Ensure the water flows through the drain hose of the indoor unit without any leakage and goes out the drain exit.

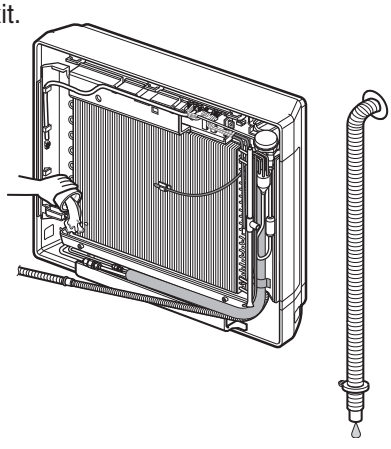

2) Drain piping

• The drain hose should point downward for easy drain flow.

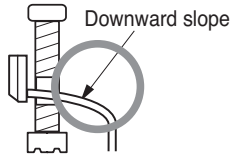

• Do not make drain piping.

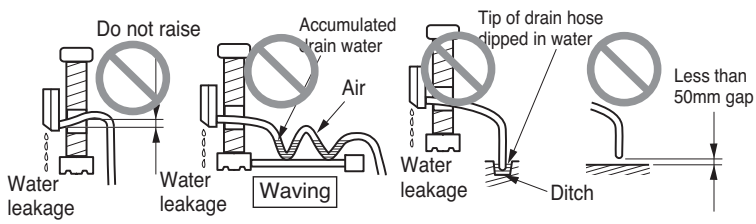

10.6 Panel Front Assembly

1. First, Check the side cover assembly exactly, and fix the power cord in the bottom groove of cover side left.

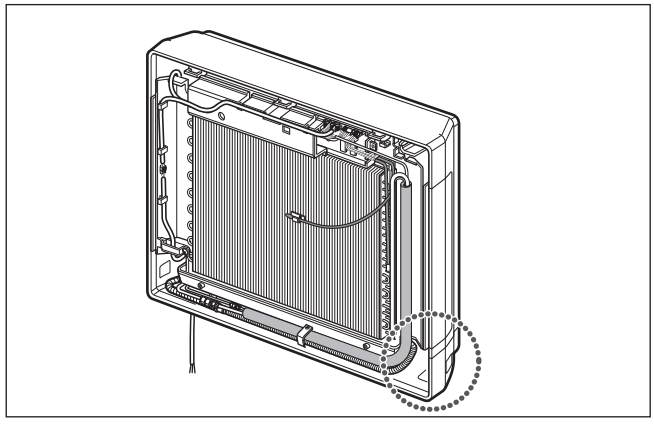

2. Assemble connecting lead wire with controller, fix the upper part of panel front, and match the lower part of panel front.

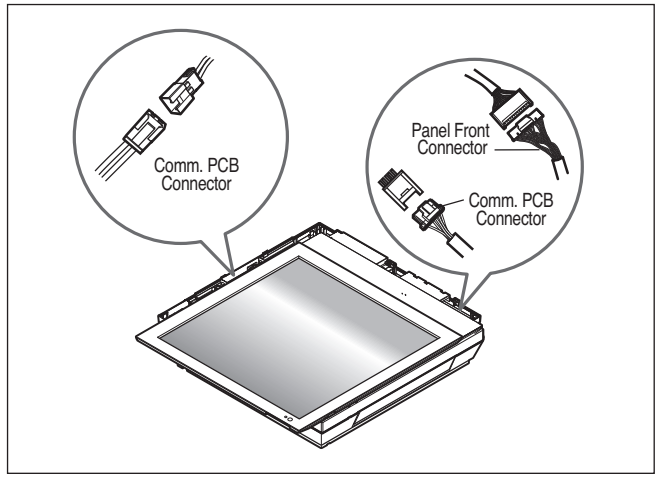

3. Screw up panel front, and suspend the hook of panel front in the groove.

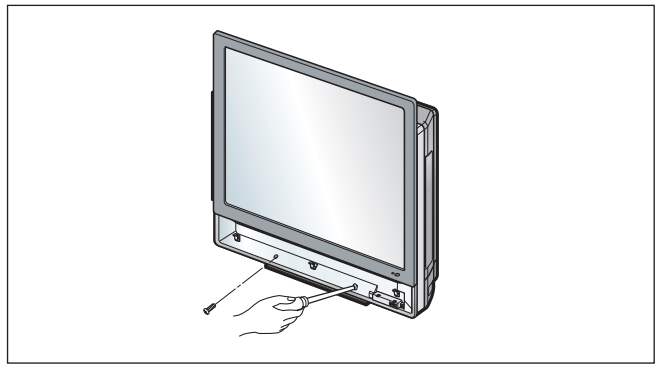

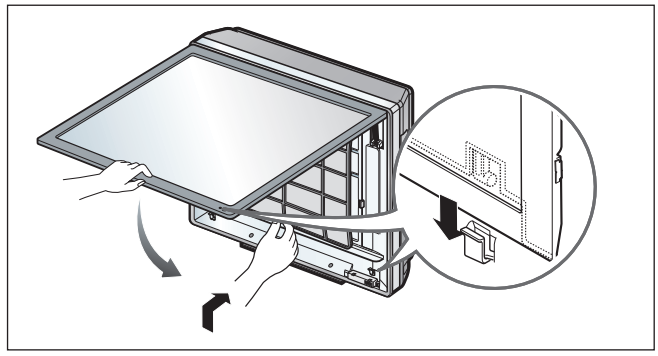

10. Installation

10.7 Connect the cable to the Indoor unit.

- **Connect the cable to the indoor unit by connecting the wires to the terminals on the control board individually according to the outdoor unit connection.** (Ensure that the color of the wires of the outdoor unit and the terminal No. are the same as those of the indoor unit.)
  The earth wire should be longer than the common wires.

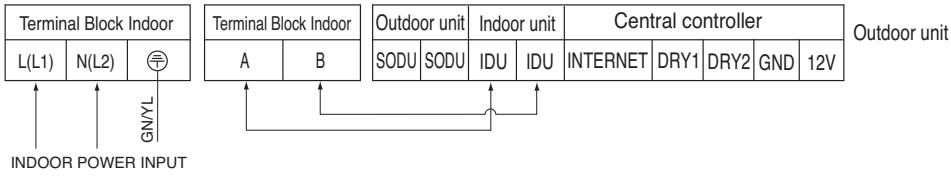

- When installing, refer to the circuit diagram on the Control Box of Indoor Unit.
- When installing, refer to the wiring diagram on the Control Cover Inside Outdoor Unit.

Connection Terminal

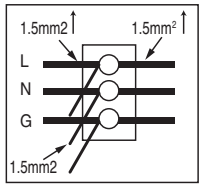

Please consider the all connected capacity of indoor units.

- The capacity of connection terminal should be over 250V 20A. And when connecting the power line and communication line between indoor units, you are advised to use the connection terminal.
- When you are not able to use the connection terminal, fix each power line/communication line by using the clamp cord attached in the product, together with the clamp cord and screw in the accessories.

⚠ CAUTION

- The above circuit diagram is subject to change without notice.
- Be sure to connect wires according to the wiring diagram.
- Connect the wires firmly, so that not to be pulled out easily.
- Connect the wires according to color codes by referring the wiring diagram.

⚠ CAUTION

After the confirmation of the above conditions, prepare the wiring as follows:

1) Never fail to have separate power circuit specifically for the air conditioner. As for the method of wiring, follow the circuit diagram posted on the inside of control cover.
2) The screw which fasten the wiring in the casing of electrical fittings are liable to come loose from vibrations to which the unit is subjected during the course of transportation. Check them and make sure that they are all tightly fastened. (If they are loose, it could cause burn-out of the wires.)
3) Confirm the specification of power source.
4) Confirm that electrical capacity is sufficient.
5) See to that the starting voltage is maintained at more than 90 percent of the rated voltage marked on the name plate.
6) Confirm that the cable thickness is as specified in the power source specification. (Particularly note the relation between cable length and thickness.
7) Always install an earth leakage circuit breaker in a wet or moist area.
8) The following would be caused by voltage drop.
- Vibration of a magnetic switch, which will damage the contact point, fuse breaking, disturbance of the normal function of the overload.

9) The means for disconnection from a power supply shall be incorporated in the fixed wiring and have an air gap contact separation of at least 3mm in each active(phase) conductor.

WIRED REMOTE CONTROLLER INSTALLATION

• Since the room temperature sensor is in the remote controller, the remote controller box should be installed in a place away from direct sunlight, high humidity and direct supply of cold air to maintain proper space temperature.
Install the remote controller about 5ft(1.5m) above the floor in an area with good air circulation at an average temperature.

Do not install the remote controller where it can be affected by:

- Drafts, or dead spots behind doors and in corners.
- Hot or cold air from ducts.
- Radiant heat from sun or appliances.
- Concealed pipes and chimneys.
- Uncontrolled areas such as an outside wall behind the remote controller.
- This remote controller is equipped with a seven segment LED. display. For proper display of the remote controller LED's, the remote controller should be installed properly as shown in Fig.1.
(The standard height is 1.2~1.5 m from floor level.)

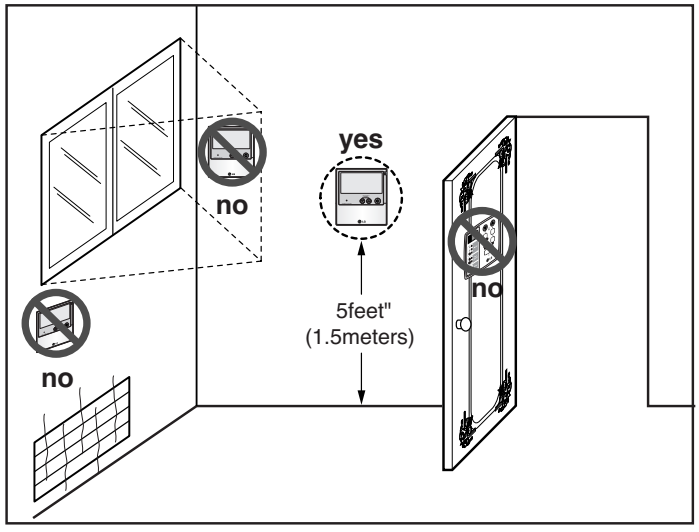

Fig.1 Typical locations for remote controller

11. Accessories

Standard Accessories

Name	Installation guide map	Type "A" screws and plastic anchors	(Other)
Quantity	1 EA	4 SET	• Owner's manual • Installation manual
Shape	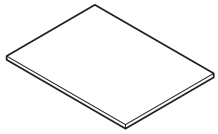		

⚠ CAUTION

• Use only those accessories (Standard or optional) which have designated specifications.

MULTI V™ Indoor unit

Console

1. List of functions

2. Specifications

3. Dimensions

4. Piping Diagrams

5. Wiring Diagrams

6. Capacity Tables

7. Air Velocity and Temperature Distribution

8. Electric Characteristics

9. Sound Levels

10. Installation

11. Accessories

1. List of functions

Category	Function	ARNU07GQAA4, ARNU09GQAA4, ARNU12GQAA4 ARNU15GQAA4
Air flow	Air supply outlet	2
	Airflow direction control(left & right)	Manual
	Airflow direction control(up & down)	Auto
	Auto swing(left & right)	X
	Auto swing(up & down)	O
	Airflow steps(fan/cool/heat)	4/5/4
	Chaos swing	X
	Chaos wind(auto wind)	O
	Jet cool(Power wind)	O
	Swirl wind	X
Air purifying	Deodorizing filter	X
	Ion Generator	O
	Prefilter(washable / anti-fungus)	O
Installation	Drain pump	X
	E.S.P. control	X
	Electric heater(operation)	X
	High ceiling operation	X
Reliability	Hot start	O
	Self diagnosis	O
	Soft dry operation	O
Convenience	Auto changeover	O
	Auto cleaning	X
	Auto operation(artificial intelligence)	O
	Auto restart operation	O
	Child lock	O
	Forced operation	O
	Group control	O
	Sleep mode	O
	Timer(on/off)	O
	Timer(weekly)	O
	Two thermistor control	O
Individual control	Wide wired remote controller (RS2)	PQRCVSL0/PQRCVSL0QW
	Wide wired remote controller (RS2 Plus)	PREMTB001/PREMTBB01
	Premium wired remote controller	PREMTA000/PREMTA000A/PREMTA000B
	Simple wired remote controller	PQRCHCA0Q(W)
	Wired remote controller(for hotel use)	PQRCHCA0Q(W)
	Wireless LCD remote control	PQWRH(C)Q0FDB
Special function kit	Zone control	-
	CTIE	-
	Electro thermostat	-
	Remote temperature sensor	-
	Group control wire	PZCWRCG3
	Dry contact	PDRYCB000/PDRYCB100/PDRYCB300/PDRYCB400/PDRYCB500

O : Applied X : Not applied – : No relation

Option : Model name & price are different according to options, and assembled in factory with main unit.

Accessory : Installed at field, ordered and purchased separately by the corresponding model name, supplied with separate package.

2. Specification

Type			Console	
Model		Unit	ARNU07GQAA4	ARNU09GQAA4
Cooling Capacity		kW	2.2	2.8
		kcal/h	1,900	2,400
		Btu/h	7,500	9,600
Heating Capacity		kW	2.5	3.2
		kcal/h	2,200	2,800
		Btu/h	8,500	10,900
Casing			Galvanized Steel Plate	Galvanized Steel Plate
Dimensions (W x H x D)	Body	mm	700 x 600 x 210	700 x 600 x 210
		inch	27-9/16 x 23-5/8 x 8-1/4	27-9/16 x 23-5/8 x 8-1/4
Coil	Rows x Columns x FPI		19 x 2 x 19	19 x 2 x 19
	Face Area	m^2	-	-
Fan	Type		Turbo fan	Turbo fan
	Motor Output x Number	W	48 x 1	48 x 1
	Running Current	A	0.3	0.3
	Air Flow Rate(H/M/L)	CMM	6.7 / 5.9 / 4.8	6.7 / 5.9 / 4.8
		cfm	236 / 209 / 170	236 / 209 / 170
	Drive		Direct	Direct
	Motor type		BLDC	BLDC
Temperature Control			Microprocessor, Thermostat for cooling and heating	Microprocessor, Thermostat for cooling and heating
Sound Absorbing Thermal Insulation Material			Foamed polystrene	Foamed polystrene
Safety Device			Fuse	Fuse
Pipe Connections	Liquid Side	mm(inch)	Ø6.35(1/4)	Ø6.35(1/4)
	Gas Side	mm(inch)	Ø12.7(1/2)	Ø12.7(1/2)
	Drain(OD/ID)	mm	17/12.2	17/12.2
Net Weight	Body	kg(lbs)	14.0(30.9)	14.0(30.9)
Noise Level(Sound Press, 1.5m, H/M/L)		dB(A)	37 / 34 / 28	37 / 34 / 28
Power Supply		Ø, V, Hz	1, 220 - 240, 50	1, 220 - 240, 50
Refrigerant Control			EEV	EEV
Power cable		mm^2(CV)	1.5 x 3C	1.5 x 3C
Transmission Cable		mm^2(VCTF-SB)	1.0 ~ 1.5 x 2C	1.0 ~ 1.5 x 2C

Notes:-

1. Capacities are based on the following conditions:
   - Cooling
     - Indoor temp. 27°C[80.6°F]DB/ 19°C[66.2°F]WB
     - Outdoor temp. 35°C[95°F]DB/ 24°C[75.2°F]WB
     - Interconnecting Piping Length 7.5m
     - Level Difference of Zero
   - Heating
     - Indoor temp. 20°C[68°F]DB/ 15°C[59°F]WB
     - Outdoor temp. 7°C[44.6°F]DB/ 6°C[42.8°F]WB
     - Interconnecting Piping Length 7.5m
     - Level Difference of Zero
2. Capacities are net capacities
3. Due to our policy of innovation some specifications may be changed without prior notification
4. Wiring cable size must comply with the applicable local and national codes. And “Electric characteristics” chapter should be considered for electrical work and design. Especially the power cable and circuit breaker should be selected in accordance with that.
5. EEV : Electronic Expansion Valve
6. Anechoic chamber conversion value is measured at 1.5 m downward from unit centre.
   The values depends on the ambient conditions and values are normally higher in actual operation.

Conversion Formula
kcal/h= kW x 860
Btu/h = kW x 3412
cfm = m^3/min x 35.3
l/s = CMM x 1000/60

2. Specification

Type			Console	
Model		Unit	ARNU12GQAA4	ARNU15GQAA4
Cooling Capacity		kW	3.6	4.5
		kcal/h	3,100	3,900
		Btu/h	12,300	15,400
Heating Capacity		kW	4.0	5.0
		kcal/h	3,400	4,300
		Btu/h	13,600	17,100
Casing			Galvanized Steel Plate	Galvanized Steel Plate
Dimensions (W x H x D)	Body	mm	700 x 600 x 210	700 x 600 x 210
		inch	27-9/16 x 23-5/8 x 8-1/4	27-9/16 x 23-5/8 x 8-1/4
Coil	Rows x Columns x FPI		19 x 2 x 19	19 x 2 x 19
	Face Area	m^2	-	-
Fan	Type		Turbo fan	Turbo fan
	Motor Output x Number	W	48 x 1	48 x 1
	Running Current	A	0.3	0.3
	Air Flow Rate(H/M/L)	CMM	7.5 / 5.9 / 4.8	8.7 / 6.7 / 5.9
		cfm	265 / 209 / 170	307 / 236 / 209
	Drive		Direct	Direct
	Motor type		BLDC	BLDC
Temperature Control			Microprocessor, Thermostat for cooling and heating	Microprocessor, Thermostat for cooling and heating
Sound Absorbing Thermal Insulation Material			Foamed polystrene	Foamed polystrene
Safety Device			Fuse	Fuse
Pipe Connections	Liquid Side	mm(inch)	Ø6.35(1/4)	Ø6.35(1/4)
	Gas Side	mm(inch)	Ø12.7(1/2)	Ø12.7(1/2)
	Drain(OD/ID)	mm	17/12.2	17/12.2
Net Weight	Body	kg(lbs)	14.0(30.9)	14.0(30.9)
Noise Level(Sound Press, 1.5m, H/M/L)		dB(A)	39 / 34 / 28	42 / 37 / 31
Power Supply		Ø, V, Hz	1, 220 - 240, 50	1, 220 - 240, 50
Refrigerant Control			EEV	EEV
Power cable		mm^2(CV)	1.5 x 3C	1.5 x 3C
Transmission Cable		mm^2(VCTF-SB)	1.0 ~ 1.5 x 2C	1.0 ~ 1.5 x 2C

Notes:-

1. Capacities are based on the following conditions:
   - Cooling
     - Indoor temp. 27°C[80.6°F]DB/ 19°C[66.2°F]WB
     - Outdoor temp. 35°C[95°F]DB/ 24°C[75.2°F]WB
     - Interconnecting Piping Length 7.5m
     - Level Difference of Zero
   - Heating
     - Indoor temp. 20°C[68°F]DB/ 15°C[59°F]WB
     - Outdoor temp. 7°C[44.6°F]DB/ 6°C[42.8°F]WB
     - Interconnecting Piping Length 7.5m
     - Level Difference of Zero
2. Capacities are net capacities
3. Due to our policy of innovation some specifications may be changed without prior notification
4. Wiring cable size must comply with the applicable local and national codes. And “Electric characteristics” chapter should be considered for electrical work and design. Especially the power cable and circuit breaker should be selected in accordance with that.
5. EEV : Electronic Expansion Valve
6. Anechoic chamber conversion value is measured at 1.5 m downward from unit centre. The values depends on the ambient conditions and values are normally higher in actual operation.

Conversion Formula
kcal/h= kW x 860
Btu/h = kW x 3412
cfm = m^3/min x 35.3
l/s = CMM x 1000/60

3. Dimensions

Console
ARNU07GQAA4 ARNU09GQAA4 ARNU12GQAA4 ARNU15GQAA4

No.	Part Name	Remark
1	Liquid pipe connection	Ø6.35
2	Gas pipe connection	Ø12.7
3	Drain pipe connection	
4	Display & signal receiver	
5	Air discharge grill	
6	Air suction grill	

▣ Note

1. Unit should be installed in compliance with theinstallation manual in the product box.
2. Unit shall be grounded in accordance with the localregulations or applicable national codes.
3. The Unit is powered from the outdoor unit. So power cable should be connected with the outdoor unit.

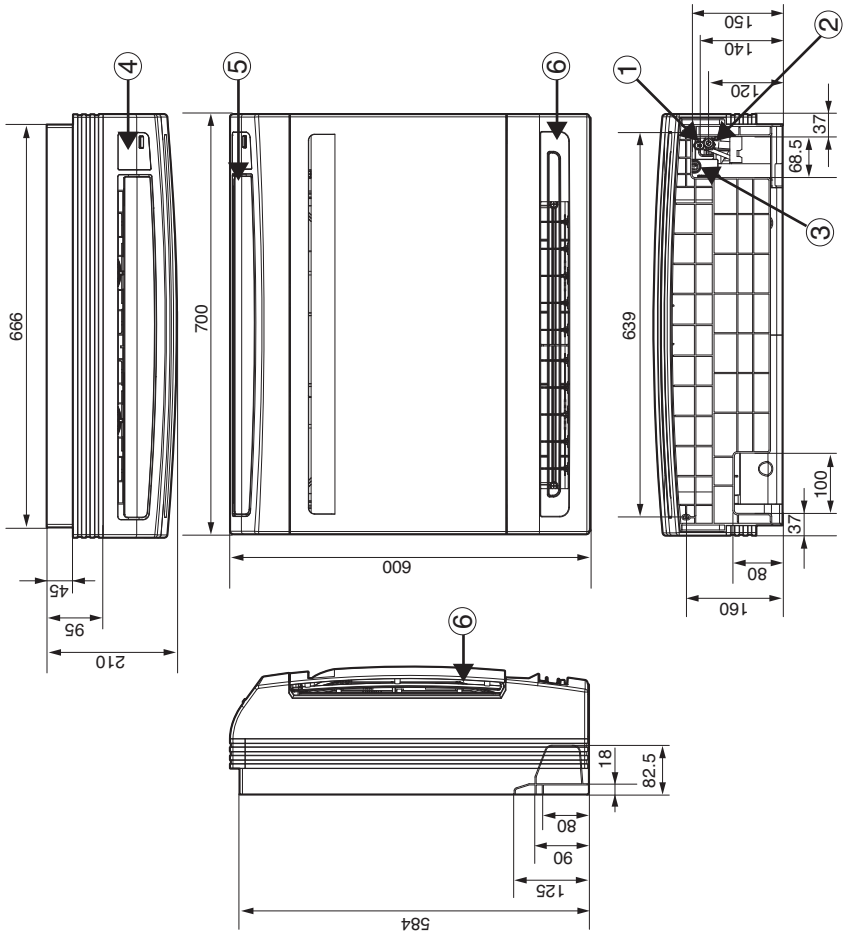

LG Electronics

CHASSIS CODE: QA

4. Piping Diagrams

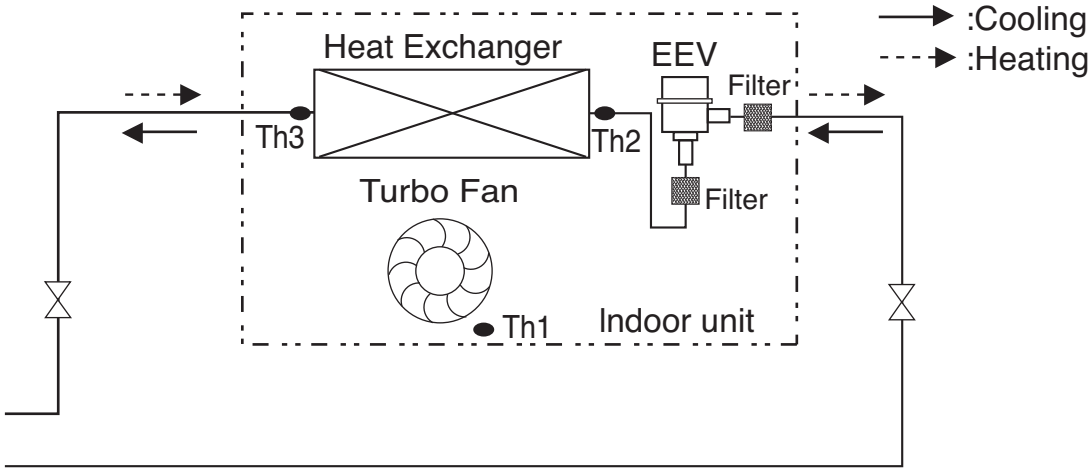

Refrigerant pipe connection port diameter

[Unit: mm(inch)]

Model	Gas	Liquid
ARNU07GQAA4	Ø12.7(1/2)	Ø6.35(1/4)
ARNU09GQAA4	Ø12.7(1/2)	Ø6.35(1/4)
ARNU12GQAA4	Ø12.7(1/2)	Ø6.35(1/4)
ARNU15GQAA4	Ø12.7(1/2)	Ø6.35(1/4)

LOC.	Description
Th1	Room thermistor
Th2	Pipe in thermistor
Th3	Pipe out thermistor

5. Wiring Diagrams

QA Chassis

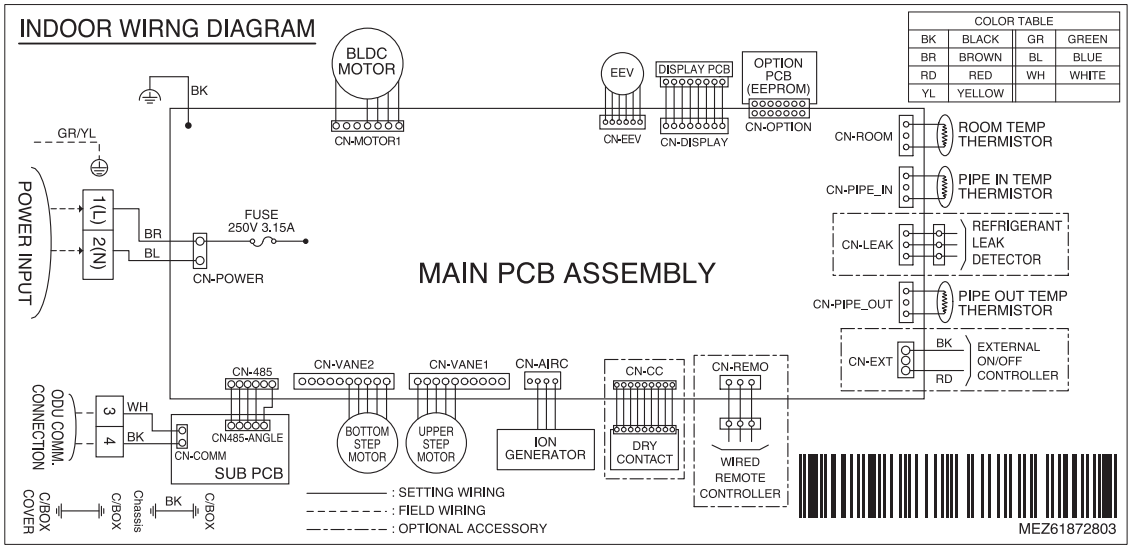

CONNECTOR NUMBER	LOCATION POINT	FUNCTION
CN-POWER	AC Power supply	AC Power line input for indoor controller
CN-MOTOR1	Fan motor output	Motor output of BLDC
CN-485	Communication	Connection between indoor and outdoor
CN-DISP	Display	Display of indoor status
CN-EEV	EEV Output	EEV Control output
CN-VANE2	Step motor	Step motor output
CN-FLOAT	Float switch input	Float switch sensing
CN-PIPE_IN	Suction pipe sensor	Pipe in thermistor
CN-PIPE_OUT	Discharge pipe sensor	Pipe out thermistor
CN-ROOM	Room sensor	Room air thermistor
CN-REMO	Remote controller	Remote control line
CN-CC	Dry contact	Dry contact line
CN-AIRC	Air clean	Air cleaner control

Dip Switch Setting		Off	On	Remarks
SW3	GROUP	Master	Slave	Group Control setting using Wired Remote Controller
SW4	DRY CONTACT	Variable	Auto	Old Dry Contact Mode Setting 1. Variable : Auto/Manual Mode can be chosen by Wide wired remote controller or Wireless remote controller (When shipped from Factory → Manual Mode) 2. Auto : For Dry Contact, it is always Auto mode.
SW5	EXTRA 1	Off	On	1. Duct model -. OFF : Default(not operate continuosly) -. ON : Fan operate continuosly 2. Cassette Model : No Function 3. Ceiling Suspended Model -. OFF : Ceiling(default) -. ON : Floor

⚠ CAUTION

For Multi V Model, Dip Switch 1,2,6,7,8 must be set OFF
That dip switch is used for the other model.

6. Capacity Tables

6.1 Cooling Capacity

Cooling capacity

Capacity Index	Outdoor air temp. (DB, °C)	Indoor air temp. (DB/WB, °C)													
		20		23		26		27		28		30		32	
		14		16		18		19		20		22		24	
		TC	SHC	TC	SHC	TC	SHC	TC	SHC	TC	SHC	TC	SHC	TC	SHC
		kW	kW	kW	kW	kW	kW	kW	kW	kW	kW	kW	kW	kW	kW
2.2	10	1.5	1.3	1.8	1.4	2.1	1.6	2.2	1.6	2.3	1.6	2.6	1.5	2.8	1.6
	12	1.5	1.3	1.8	1.4	2.1	1.6	2.2	1.6	2.3	1.6	2.6	1.5	2.8	1.6
	14	1.5	1.3	1.8	1.4	2.1	1.6	2.2	1.6	2.3	1.6	2.6	1.5	2.8	1.6
	16	1.5	1.3	1.8	1.4	2.1	1.6	2.2	1.6	2.3	1.6	2.6	1.5	2.7	1.6
	18	1.5	1.3	1.8	1.4	2.1	1.6	2.2	1.6	2.3	1.6	2.6	1.5	2.7	1.6
	20	1.5	1.3	1.8	1.4	2.1	1.6	2.2	1.6	2.3	1.6	2.6	1.5	2.7	1.6
	21	1.5	1.3	1.8	1.4	2.1	1.6	2.2	1.6	2.3	1.6	2.6	1.5	2.7	1.6
	23	1.5	1.3	1.8	1.4	2.1	1.6	2.2	1.6	2.3	1.6	2.5	1.5	2.6	1.5
	25	1.5	1.3	1.8	1.4	2.1	1.6	2.2	1.6	2.3	1.6	2.5	1.5	2.6	1.5
	27	1.5	1.3	1.8	1.4	2.1	1.6	2.2	1.6	2.3	1.6	2.5	1.5	2.6	1.5
	29	1.5	1.3	1.8	1.4	2.1	1.6	2.2	1.6	2.3	1.6	2.5	1.4	2.5	1.5
	31	1.5	1.3	1.8	1.4	2.1	1.6	2.2	1.6	2.3	1.6	2.4	1.4	2.5	1.4
	33	1.5	1.3	1.8	1.4	2.1	1.6	2.2	1.6	2.3	1.6	2.4	1.4	2.4	1.4
	35	1.5	1.3	1.8	1.4	2.1	1.6	2.2	1.6	2.3	1.6	2.4	1.4	2.4	1.4
	37	1.5	1.3	1.8	1.4	2.1	1.6	2.2	1.6	2.2	1.6	2.3	1.4	2.4	1.4
	39	1.5	1.3	1.8	1.4	2.1	1.6	2.1	1.5	2.2	1.5	2.3	1.3	2.3	1.4
	42	1.5	1.3	1.8	1.4	2.1	1.6	2.1	1.5	2.2	1.5	2.2	1.3	2.3	1.3
	44	1.5	1.3	1.8	1.4	2.0	1.5	2.1	1.5	2.1	1.5	2.2	1.3	2.2	1.3
	46	1.5	1.3	1.8	1.4	1.9	1.5	2.0	1.4	2.0	1.4	2.0	1.2	2.0	1.2
2.8	10	1.9	1.6	2.3	1.8	2.6	2.0	2.8	2.0	3.0	2.0	3.3	1.9	3.6	2.1
	12	1.9	1.6	2.3	1.8	2.6	2.0	2.8	2.0	3.0	2.0	3.3	1.9	3.6	2.0
	14	1.9	1.6	2.3	1.8	2.6	2.0	2.8	2.0	3.0	2.0	3.3	1.9	3.5	2.0
	16	1.9	1.6	2.3	1.8	2.6	2.0	2.8	2.0	3.0	2.0	3.3	1.9	3.5	2.0
	18	1.9	1.6	2.3	1.8	2.6	2.0	2.8	2.0	3.0	2.0	3.3	1.9	3.5	2.0
	20	1.9	1.6	2.3	1.8	2.6	2.0	2.8	2.0	3.0	2.0	3.3	1.9	3.4	2.0
	21	1.9	1.6	2.3	1.8	2.6	2.0	2.8	2.0	3.0	2.0	3.3	1.9	3.4	2.0
	23	1.9	1.6	2.3	1.8	2.6	2.0	2.8	2.0	3.0	2.0	3.2	1.9	3.3	1.9
	25	1.9	1.6	2.3	1.8	2.6	2.0	2.8	2.0	3.0	2.0	3.2	1.8	3.3	1.9
	27	1.9	1.6	2.3	1.8	2.6	2.0	2.8	2.0	3.0	2.0	3.2	1.8	3.3	1.9
	29	1.9	1.6	2.3	1.8	2.6	2.0	2.8	2.0	3.0	2.0	3.1	1.8	3.2	1.8
	31	1.9	1.6	2.3	1.8	2.6	2.0	2.8	2.0	2.9	2.0	3.1	1.8	3.2	1.8
	33	1.9	1.6	2.3	1.8	2.6	2.0	2.8	2.0	2.9	2.0	3.0	1.8	3.1	1.8
	35	1.9	1.6	2.3	1.8	2.6	2.0	2.8	2.0	2.9	2.0	3.0	1.7	3.1	1.8
	37	1.9	1.6	2.3	1.8	2.6	2.0	2.8	2.0	2.8	2.0	2.9	1.7	3.0	1.7
	39	1.9	1.6	2.3	1.8	2.6	2.0	2.7	1.9	2.8	1.9	2.9	1.7	3.0	1.7
	42	1.9	1.6	2.3	1.8	2.6	2.0	2.7	1.9	2.8	1.9	2.8	1.6	2.9	1.7
	44	1.9	1.6	2.3	1.8	2.6	1.9	2.7	1.9	2.7	1.9	2.8	1.6	2.9	1.6
	46	1.9	1.6	2.3	1.8	2.5	1.8	2.5	1.8	2.5	1.7	2.6	1.5	2.6	1.5

Notes:
TC: Total Capacity(kW)
SHC: Sensible Heat Capacity(kW)
1. Capacity tables show the representative value of conditions which may occur.
2. Refer to Capacity Correction Factor in the outdoor unit PDB for the actual performance data of each indoor unit and outdoor unit combination.

6. Capacity Tables

Cooling capacity

Capacity Index	Outdoor air temp. (DB, °C)	Indoor air temp. (DB/WB, °C)													
		20		23		26		27		28		30		32	
		14		16		18		19		20		22		24	
		TC	SHC	TC	SHC	TC	SHC	TC	SHC	TC	SHC	TC	SHC	TC	SHC
		kW	kW	kW	kW	kW	kW	kW	kW	kW	kW	kW	kW	kW	kW
3.6	10	2.4	2.1	2.9	2.4	3.4	2.6	3.6	2.6	3.8	2.7	4.3	2.5	4.6	2.7
	12	2.4	2.1	2.9	2.4	3.4	2.6	3.6	2.6	3.8	2.7	4.3	2.5	4.6	2.7
	14	2.4	2.1	2.9	2.4	3.4	2.6	3.6	2.6	3.8	2.7	4.3	2.5	4.5	2.6
	16	2.4	2.1	2.9	2.4	3.4	2.6	3.6	2.6	3.8	2.7	4.3	2.5	4.5	2.6
	18	2.4	2.1	2.9	2.4	3.4	2.6	3.6	2.6	3.8	2.7	4.3	2.5	4.4	2.6
	20	2.4	2.1	2.9	2.4	3.4	2.6	3.6	2.6	3.8	2.7	4.2	2.5	4.4	2.6
	21	2.4	2.1	2.9	2.4	3.4	2.6	3.6	2.6	3.8	2.7	4.2	2.4	4.4	2.5
	23	2.4	2.1	2.9	2.4	3.4	2.6	3.6	2.6	3.8	2.7	4.1	2.4	4.3	2.5
	25	2.4	2.1	2.9	2.4	3.4	2.6	3.6	2.6	3.8	2.7	4.1	2.4	4.2	2.5
	27	2.4	2.1	2.9	2.4	3.4	2.6	3.6	2.6	3.8	2.7	4.1	2.4	4.2	2.4
	29	2.4	2.1	2.9	2.4	3.4	2.6	3.6	2.6	3.8	2.7	4.0	2.3	4.1	2.4
	31	2.4	2.1	2.9	2.4	3.4	2.6	3.6	2.6	3.8	2.6	4.0	2.3	4.1	2.4
	33	2.4	2.1	2.9	2.4	3.4	2.6	3.6	2.6	3.7	2.6	3.9	2.3	4.0	2.3
	35	2.4	2.1	2.9	2.4	3.4	2.6	3.6	2.6	3.7	2.6	3.9	2.2	3.9	2.3
	37	2.4	2.1	2.9	2.4	3.4	2.6	3.6	2.6	3.7	2.5	3.8	2.2	3.9	2.3
	39	2.4	2.1	2.9	2.4	3.4	2.6	3.5	2.5	3.6	2.5	3.7	2.2	3.8	2.2
	42	2.4	2.1	2.9	2.4	3.4	2.5	3.5	2.5	3.5	2.5	3.6	2.1	3.7	2.2
	44	2.4	2.1	2.9	2.4	3.3	2.5	3.4	2.5	3.5	2.4	3.6	2.1	3.7	2.1
	46	2.4	2.1	2.9	2.4	3.2	2.4	3.2	2.3	3.3	2.3	3.3	1.9	3.3	1.9
4.5	10	3.0	2.7	3.6	2.9	4.2	3.2	4.5	3.2	4.8	3.3	5.4	3.1	5.8	3.4
	12	3.0	2.7	3.6	2.9	4.2	3.2	4.5	3.2	4.8	3.3	5.4	3.1	5.7	3.3
	14	3.0	2.7	3.6	2.9	4.2	3.2	4.5	3.2	4.8	3.3	5.4	3.1	5.7	3.3
	16	3.0	2.7	3.6	2.9	4.2	3.2	4.5	3.2	4.8	3.3	5.4	3.1	5.6	3.3
	18	3.0	2.7	3.6	2.9	4.2	3.2	4.5	3.2	4.8	3.3	5.3	3.1	5.6	3.2
	20	3.0	2.7	3.6	2.9	4.2	3.2	4.5	3.2	4.8	3.3	5.3	3.1	5.5	3.2
	21	3.0	2.7	3.6	2.9	4.2	3.2	4.5	3.2	4.8	3.3	5.2	3.1	5.5	3.2
	23	3.0	2.7	3.6	2.9	4.2	3.2	4.5	3.2	4.8	3.3	5.2	3.0	5.4	3.1
	25	3.0	2.7	3.6	2.9	4.2	3.2	4.5	3.2	4.8	3.3	5.1	3.0	5.3	3.1
	27	3.0	2.7	3.6	2.9	4.2	3.2	4.5	3.2	4.8	3.3	5.1	3.0	5.2	3.1
	29	3.0	2.7	3.6	2.9	4.2	3.2	4.5	3.2	4.8	3.3	5.0	2.9	5.2	3.0
	31	3.0	2.7	3.6	2.9	4.2	3.2	4.5	3.2	4.7	3.3	5.0	2.9	5.1	3.0
	33	3.0	2.7	3.6	2.9	4.2	3.2	4.5	3.2	4.7	3.3	4.9	2.9	5.0	2.9
	35	3.0	2.7	3.6	2.9	4.2	3.2	4.5	3.2	4.6	3.2	4.8	2.8	4.9	2.9
	37	3.0	2.7	3.6	2.9	4.2	3.2	4.4	3.2	4.6	3.2	4.7	2.8	4.8	2.8
	39	3.0	2.7	3.6	2.9	4.2	3.2	4.4	3.2	4.5	3.1	4.7	2.7	4.8	2.8
	42	3.0	2.7	3.6	2.9	4.2	3.2	4.3	3.1	4.4	3.1	4.5	2.7	4.7	2.7
	44	3.0	2.7	3.6	2.9	4.1	3.1	4.3	3.1	4.4	3.0	4.5	2.6	4.6	2.7
	46	3.0	2.7	3.6	2.9	4.0	3.0	4.0	2.9	4.1	2.8	4.1	2.4	4.2	2.4

Notes:

TC: Total Capacity(kW)

SHC: Sensible Heat Capacity(kW)

1. Capacity tables show the representative value of conditions which may occur.
2. Refer to Capacity Correction Factor in the outdoor unit PDB for the actual performance data of each indoor unit and outdoor unit combination.

6. Capacity Tables

6.2 Heating Capacity

Heating capacity

Capacity Index	Outdoor air temp.		Indoor air temp. (DB, °C)					
			16	18	20	21	22	24
	DB(°C)	WB(°C)	TC	TC	TC	TC	TC	TC
			kW	kW	kW	kW	kW	kW
2.2	-24.8	-25.0	1.4	1.4	1.4	1.4	1.4	1.4
	-21.8	-22.0	1.7	1.7	1.7	1.7	1.7	1.7
	-19.8	-20.0	1.8	1.8	1.8	1.8	1.8	1.8
	-18.8	-19.0	1.9	1.9	1.9	1.9	1.9	1.9
	-16.7	-17.0	2.0	2.0	2.0	2.0	2.0	2.0
	-14.7	-15.0	2.1	2.1	2.1	2.1	2.1	2.0
	-12.6	-13.0	2.2	2.2	2.2	2.2	2.1	2.1
	-10.5	-11.0	2.3	2.3	2.2	2.2	2.2	2.2
	-9.5	-10.0	2.3	2.3	2.3	2.3	2.3	2.2
	-8.5	-9.1	2.3	2.3	2.3	2.3	2.3	2.2
	-7.0	-7.6	2.4	2.4	2.4	2.4	2.3	2.2
	-5.0	-5.6	2.5	2.5	2.5	2.4	2.3	2.2
	-3.0	-3.7	2.6	2.6	2.5	2.4	2.3	2.2
	0.0	-0.7	2.7	2.6	2.5	2.4	2.3	2.2
	3.0	2.2	2.7	2.7	2.5	2.4	2.3	2.2
	5.0	4.1	2.8	2.7	2.5	2.4	2.3	2.2
	7.0	6.0	2.8	2.7	2.5	2.4	2.3	2.2
	9.0	7.9	2.8	2.7	2.5	2.4	2.3	2.2
	11.0	9.8	2.8	2.7	2.5	2.4	2.3	2.2
	13.0	11.8	2.8	2.7	2.5	2.4	2.3	2.2
	15.0	13.7	2.8	2.7	2.5	2.4	2.3	2.2
2.8	-24.8	-25.0	1.9	1.9	1.8	1.8	1.8	1.8
	-21.8	-22.0	2.2	2.2	2.2	2.2	2.2	2.2
	-19.8	-20.0	2.4	2.4	2.3	2.3	2.3	2.3
	-18.8	-19.0	2.4	2.4	2.4	2.4	2.4	2.4
	-16.7	-17.0	2.5	2.5	2.5	2.5	2.5	2.5
	-14.7	-15.0	2.7	2.7	2.6	2.6	2.6	2.6
	-12.6	-13.0	2.8	2.8	2.8	2.8	2.7	2.7
	-10.5	-11.0	2.9	2.9	2.9	2.9	2.9	2.8
	-9.5	-10.0	3.0	3.0	2.9	2.9	2.9	2.8
	-8.5	-9.1	3.0	3.0	3.0	3.0	3.0	2.8
	-7.0	-7.6	3.1	3.1	3.1	3.1	3.0	2.8
	-5.0	-5.6	3.2	3.2	3.2	3.1	3.0	2.8
	-3.0	-3.7	3.4	3.3	3.2	3.1	3.0	2.8
	0.0	-0.7	3.4	3.3	3.2	3.1	3.0	2.8
	3.0	2.2	3.5	3.4	3.2	3.1	3.0	2.8
	5.0	4.1	3.6	3.4	3.2	3.1	3.0	2.8
	7.0	6.0	3.6	3.4	3.2	3.1	3.0	2.8
	9.0	7.9	3.6	3.4	3.2	3.1	3.0	2.8
	11.0	9.8	3.6	3.4	3.2	3.1	3.0	2.8
	13.0	11.8	3.6	3.4	3.2	3.1	3.0	2.8
	15.0	13.7	3.6	3.4	3.2	3.1	3.0	2.8
3.6	-24.8	-25.0	2.3	2.3	2.3	2.3	2.3	2.3
	-21.8	-22.0	2.8	2.8	2.8	2.8	2.8	2.8
	-19.8	-20.0	2.9	2.9	2.9	2.9	2.9	2.9
	-18.8	-19.0	3.0	3.0	3.0	3.0	3.0	3.0
	-16.7	-17.0	3.1	3.1	3.1	3.1	3.1	3.1
	-14.7	-15.0	3.3	3.3	3.3	3.3	3.3	3.3
	-12.6	-13.0	3.5	3.4	3.4	3.4	3.4	3.4
	-10.5	-11.0	3.6	3.6	3.6	3.6	3.6	3.5
	-9.5	-10.0	3.7	3.7	3.7	3.7	3.7	3.5
	-8.5	-9.1	3.8	3.8	3.7	3.7	3.7	3.5
	-7.0	-7.6	3.9	3.9	3.9	3.8	3.7	3.5
	-5.0	-5.6	4.0	4.0	4.0	3.9	3.7	3.5
	-3.0	-3.7	4.2	4.1	4.0	3.9	3.7	3.5
	0.0	-0.7	4.3	4.1	4.0	3.9	3.7	3.5
	3.0	2.2	4.4	4.3	4.0	3.9	3.7	3.5
	5.0	4.1	4.5	4.3	4.0	3.9	3.7	3.5
	7.0	6.0	4.5	4.3	4.0	3.9	3.7	3.5
	9.0	7.9	4.5	4.3	4.0	3.9	3.7	3.5
	11.0	9.8	4.5	4.3	4.0	3.9	3.7	3.5
	13.0	11.8	4.5	4.3	4.0	3.9	3.7	3.5
	15.0	13.7	4.5	4.3	4.0	3.9	3.7	3.5

6. Capacity Tables

Heating capacity

Capacity Index	Outdoor air temp.		Indoor air temp. (DB, °C)					
			16	18	20	21	22	24
	DB(°C)	WB(°C)	TC	TC	TC	TC	TC	TC
			kW	kW	kW	kW	kW	kW
4.5	-24.8	-25.0	2.9	2.9	2.9	2.9	2.9	2.9
	-21.8	-22.0	3.5	3.5	3.5	3.5	3.5	3.5
	-19.8	-20.0	3.7	3.7	3.7	3.7	3.7	3.6
	-18.8	-19.0	3.8	3.7	3.7	3.7	3.7	3.7
	-16.7	-17.0	3.9	3.9	3.9	3.9	3.9	3.9
	-14.7	-15.0	4.1	4.1	4.1	4.1	4.1	4.1
	-12.6	-13.0	4.3	4.3	4.3	4.3	4.3	4.3
	-10.5	-11.0	4.5	4.5	4.5	4.5	4.5	4.4
	-9.5	-10.0	4.6	4.6	4.6	4.6	4.6	4.4
	-8.5	-9.1	4.7	4.7	4.7	4.7	4.7	4.4
	-7.0	-7.6	4.8	4.8	4.8	4.8	4.7	4.4
	-5.0	-5.6	5.0	5.0	5.0	4.8	4.7	4.4
	-3.0	-3.7	5.3	5.1	5.0	4.8	4.7	4.4
	0.0	-0.7	5.3	5.2	5.0	4.8	4.7	4.4
	3.0	2.2	5.5	5.3	5.0	4.8	4.7	4.4
	5.0	4.1	5.6	5.3	5.0	4.8	4.7	4.4
	7.0	6.0	5.6	5.3	5.0	4.8	4.7	4.4
	9.0	7.9	5.6	5.3	5.0	4.8	4.7	4.4
	11.0	9.8	5.6	5.3	5.0	4.8	4.7	4.4
	13.0	11.8	5.6	5.3	5.0	4.8	4.7	4.4
	15.0	13.7	5.6	5.3	5.0	4.8	4.7	4.4

Notes:

TC: Total Capacity(kW)

1. Capacity tables show the representative value of conditions which may occur.
2. is shown as reference. When selecting the outdoor units, avoid the outdoor air temperature range shown by .
3. In accordance with operation limits of outdoor unit, applicable range of capacity tables is different.
4. Refer to Capacity Correction Factor in the outdoor unit PDB for the actual performance data of each indoor unit and outdoor unit combination.

7. Air Velocity and Temperature Distribution(Reference Data)

ARNU07GQAA4

Cooling

Discharge angle:40°

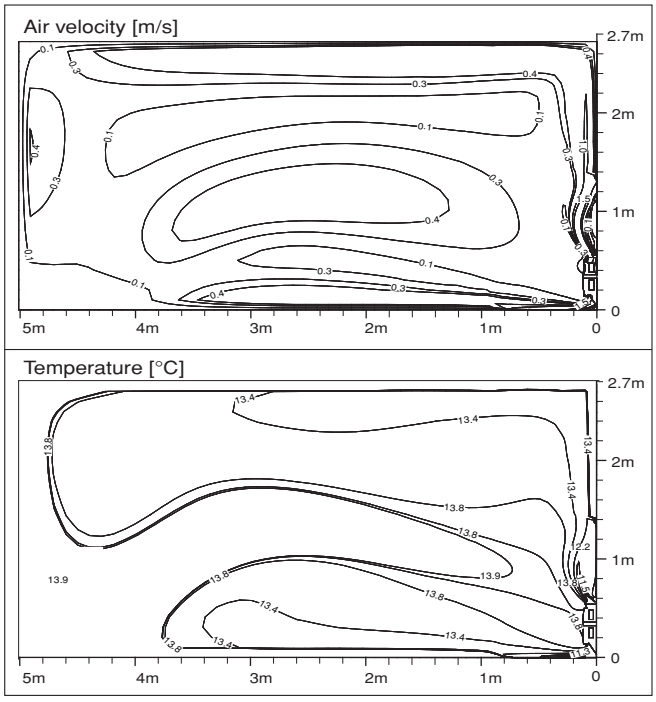

Heating

Discharge angle:50°

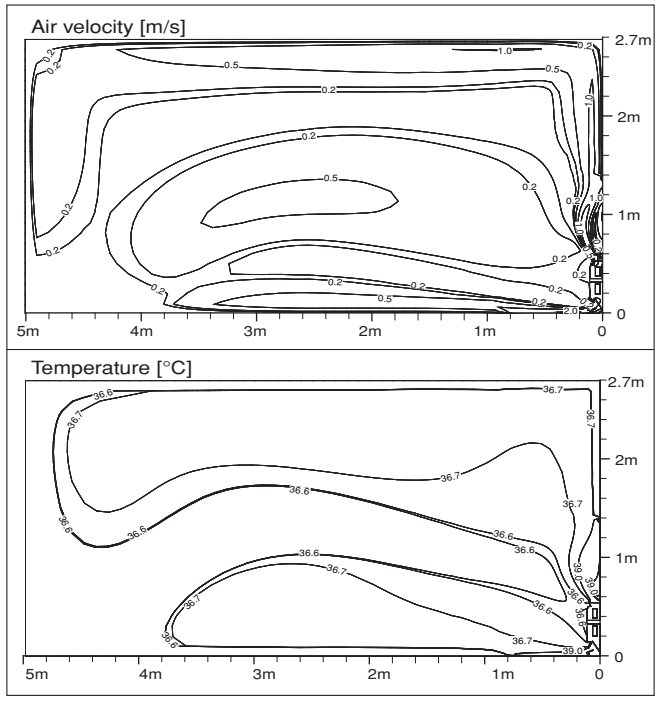

ARNU09GQAA4

Cooling

Discharge angle:40°

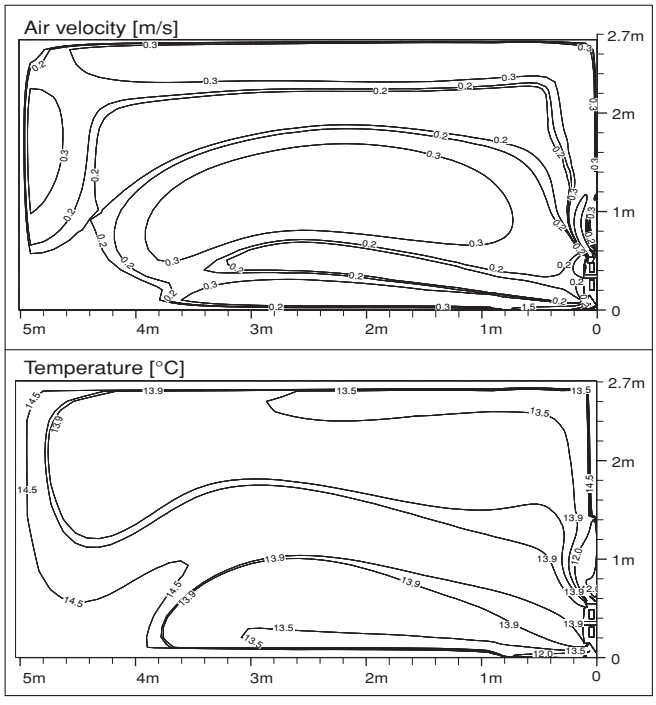

Heating

Discharge angle:50°

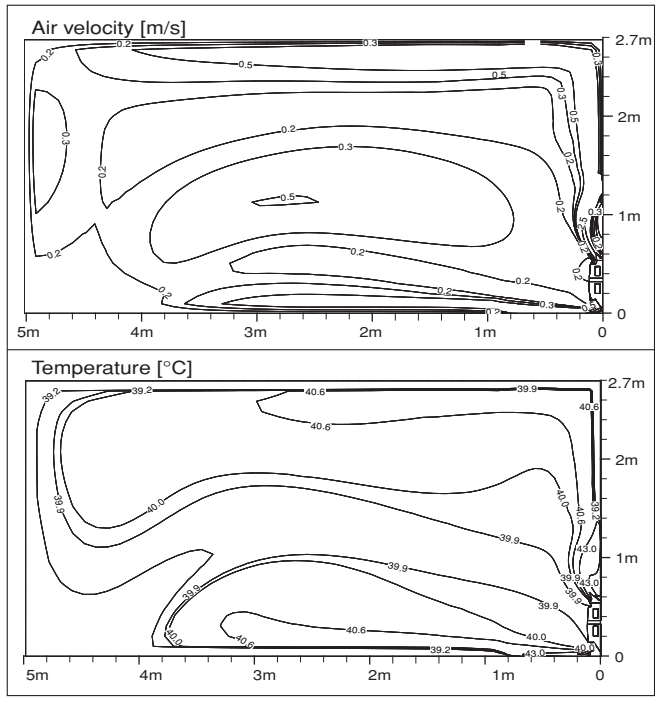

7. Air Velocity and Temperature Distribution(Reference Data)

ARNU12GQAA4

Cooling

Discharge angle:40°

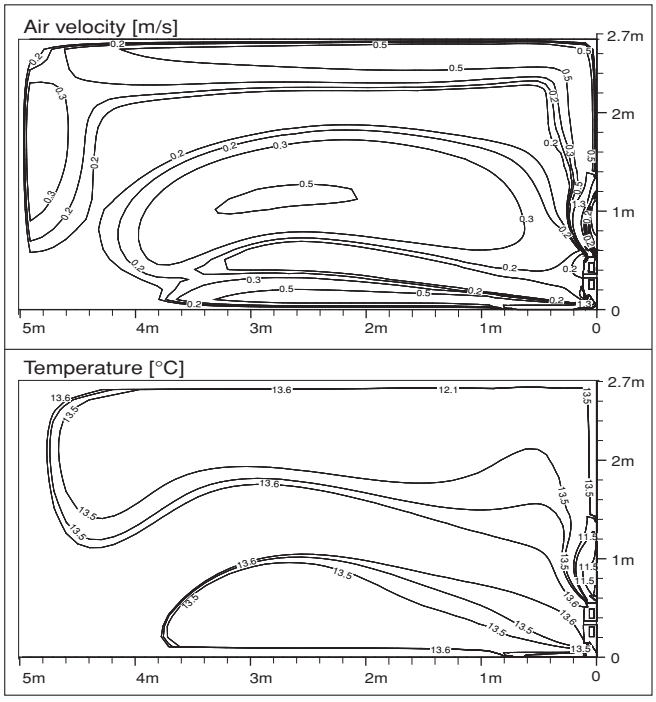

Heating

Discharge angle:50°

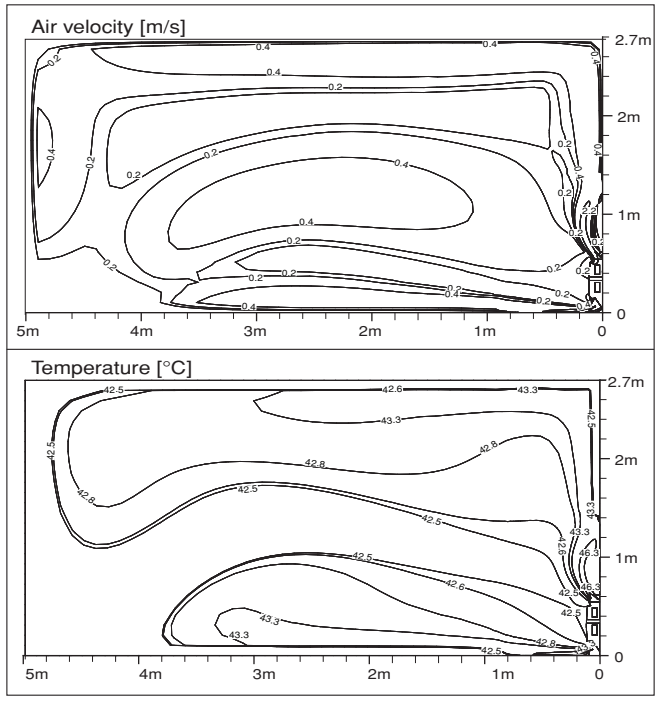

ARNU15GQAA4

Cooling

Discharge angle:40°

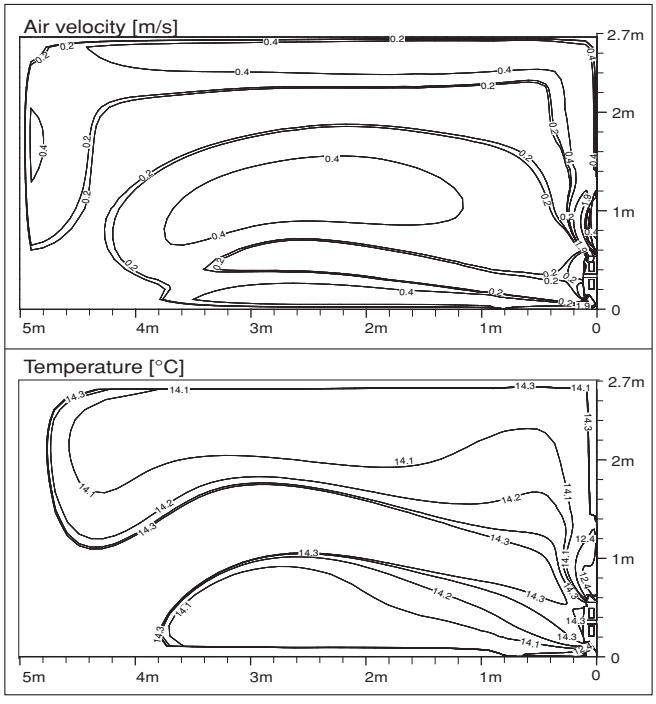

Heating

Discharge angle:50°

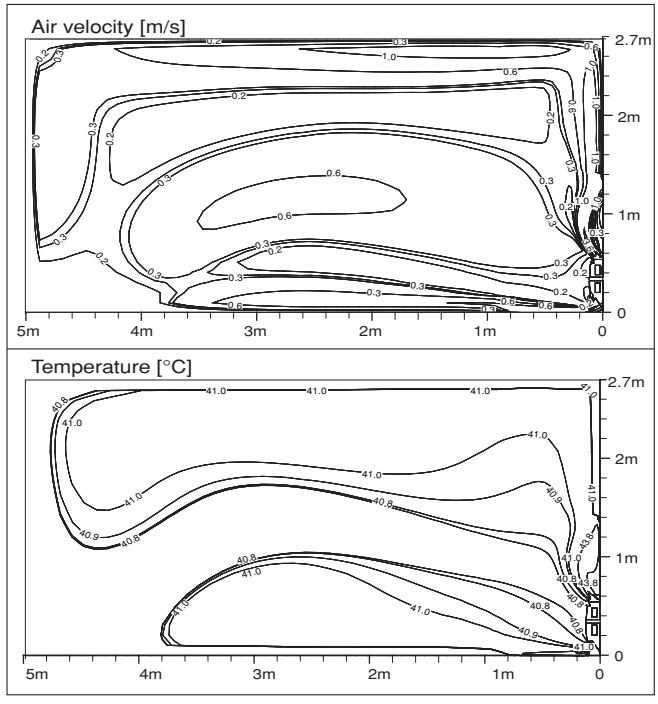

8. Electric Characteristicss

Units					Power Supply		IFM		Input(W)	
Model	Type	Hz	Volts	Voltage Range	MCA	MFA	kW	FLA	Cooling	Heating
ARNU07GQAA4	QA	50	220-240	Min.:198, Max.:264	0.34	15	0.048	0.27	15	15
ARNU09GQAA4	QA				0.34	15	0.048	0.27	15	15
ARNU12GQAA4	QA				0.36	15	0.048	0.29	18	18
ARNU15GQAA4	QA				0.36	15	0.048	0.29	24	24
ARNU07GQAA4	QA	60	220	Min.:198, Max.:242	0.34	15	0.048	0.27	15	15
ARNU09GQAA4	QA				0.34	15	0.048	0.27	15	15
ARNU12GQAA4	QA				0.36	15	0.048	0.29	18	18
ARNU15GQAA4	QA				0.36	15	0.048	0.29	24	24

Symbols:

MCA : Minimum Circuit Amperes (A)
MFA : Maximum Fuse Amperes(see note 5)
kW : Fan Motor Rated Output(kW)
FLA : Full Load Amperes(A)
IFM : Indoor Fan Motor

Note :

1. Voltage Range
   Units are suitable for use on electrical system where voltage supplied to unit terminals is not below or above the listed range limits.
2. Maximum allowable voltage unbalance between phase is 2%.
3. MCA/MFA
   MCA = 1.25 x FLA
   MFA ≤ 4 x FLA
   (Next lower standard fuse rating. Minimum 15A)
4. Select wire size based on the larger value on the MCA.
5. Instead of fuse, use Circuit Breaker.

9. Sound Levels

9.1 Sound Pressure Levels

Overall

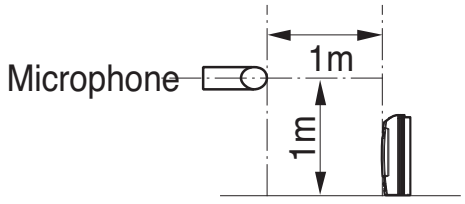

❊ Measuring place : Anechoic chamber

Notes:

1. Sound measured at each 1m away from the front and bottom of the unit
2. Operating condition
   - Power source : 220-240V 50Hz / 220V 60Hz
   - Cooling : Indoor temperature (27°C DB, 19°C WB), Outdoor temperature (35°C DB, 24°C WB)
   - Heating : Indoor temperature (20°C DB, 15°C WB), Outdoor temperature (7°C DB, 6°C WB)
3. Reference accoustic pressure 0dB = 20μPa
4. Sound level will vary depending on a range of factors such as the construction(acoustic absorption coefficient) of particular room in which the equipment in installed.

Model	Sound Levels dB(A)		
	H	M	L
ARNU07GQAA4	37	34	28
ARNU09GQAA4	37	34	28
ARNU12GQAA4	39	34	28
ARNU15GQAA4	42	37	31

ARNU07GQAA4

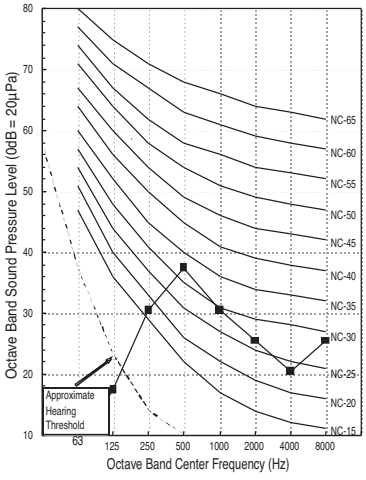

ARNU09GQAA4

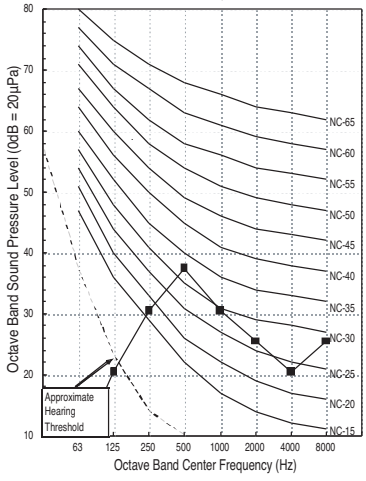

ARNU12GQAA4

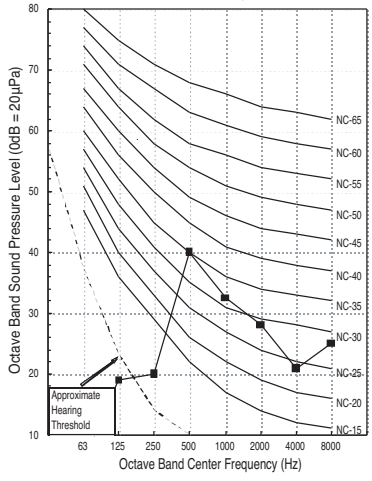

ARNU15GQAA4

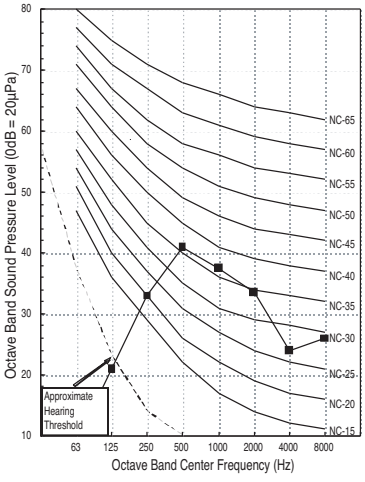

9. Sound Levels

9.2 Sound Power Levels

Model	Sound Power Levels dB(A)
	High Fan Speed
ARNU073QAA4	53.0
ARNU093QAA4	53.0
ARNU123QAA4	56.0
ARNU153QAA4	58.0

Notes:

- Data is valid at diffuse field condition
- Data is valid at nominal operating condition
- Sound level can be increased in static pressure mode or used air guide.
- Sound power level is measured on the rated condition in the reverberation rooms.
- Sound level will vary depending on a range of factors such as the construction (acoustic absorption coefficient) of particular room in which the equipment in installed.
- Reference acoustic intensity 0dB = 10E-6μW/m^2

ARNU073QAA4

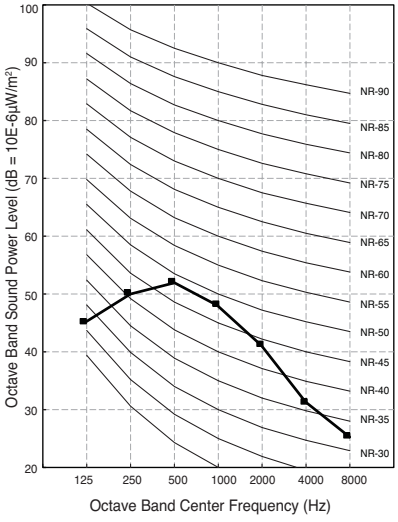

ARNU093QAA4

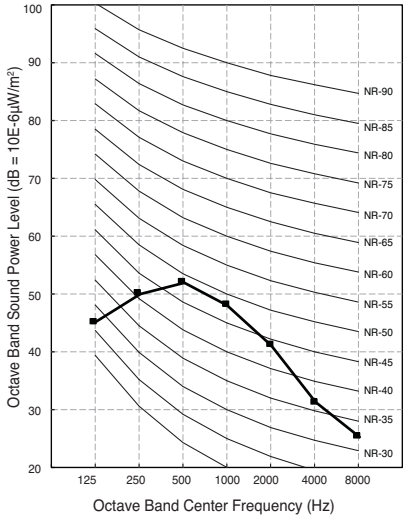

ARNU123QAA4

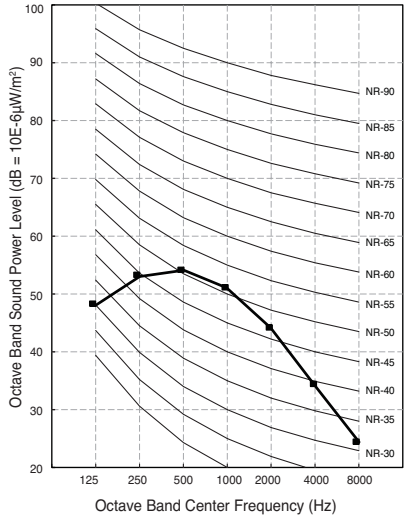

ARNU153QAA4

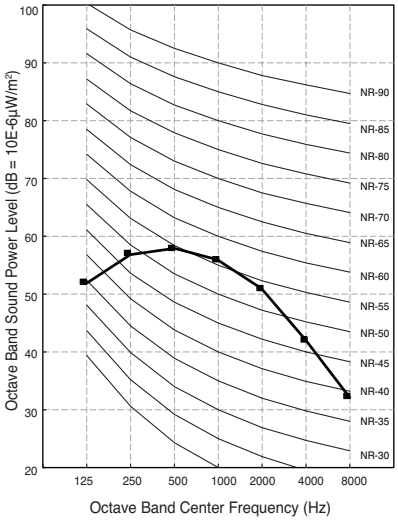

10. Installation

- Please read this instruction sheet completely before installing the product.
- When the power cord is damaged, replacement work shall be performed by authorized personnel only.
- Installation work must be performed in accordance with the national wiring standards by authorized personnel only.

10.1 Selection of the Best Location

- There should not be any heat source or steam near the unit.
- There should not be any obstacles to the air circulation.
- A place where air circulation in the room will be good.
- A place where drainage can be easily obtained.
- A place where noise prevention is taken into consideration.
- Do not install the unit near the door way.
- Ensure the spaces indicated by arrows from the wall, ceiling, or other obstacles.
- The indoor unit must have the maintenance space.

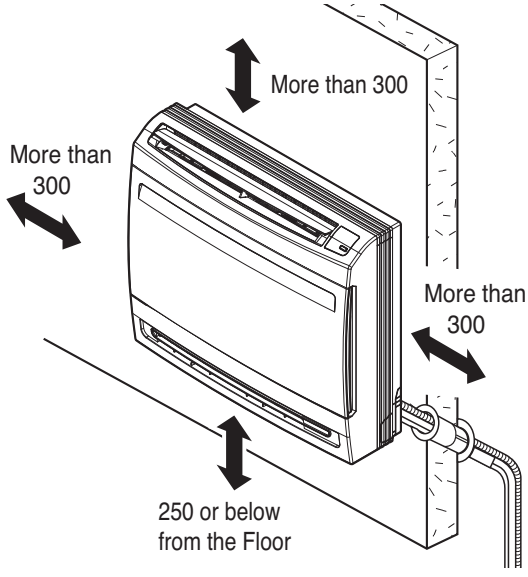

(Unit : mm)

⚠CAUTION

In case that the unit is installed near the sea, the installation parts may be corroded by salt. The installation parts (and the unit) should be taken appropriate anti-corrosion measures.

10.2 Indoor unit installation

1. Preparation / Removing front panel

1. Open the front grille by pulling forward
2. Then pull out the link of grille from groove in front panel.
3. Then pull out 2 hinges of grille from grooves in front panel.
4. Then remove 4 screws, dismount the front panel while pulling it forward.

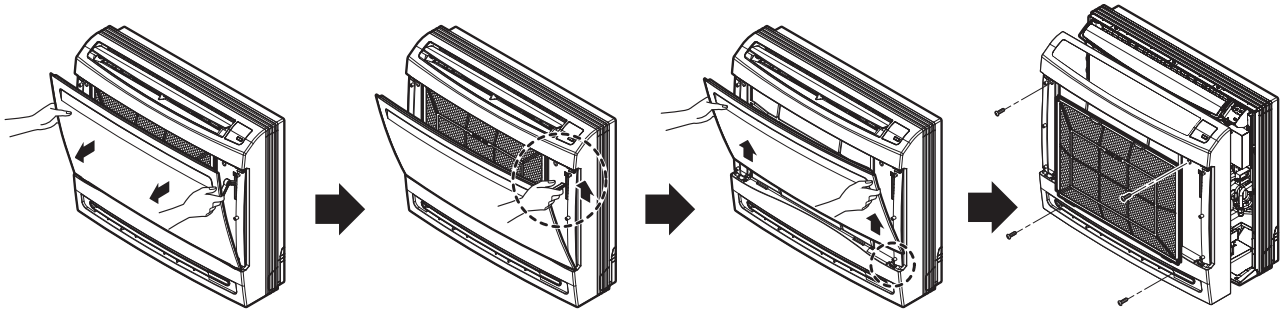

2. Preparation / For Moldings , Side Piping, and Concealed Installation

2-1 For Moldings

1. Remove the slit portions on the Rear Panel.

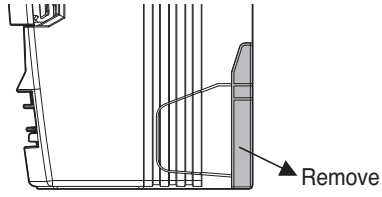

2-2 For Concealed Installation

1. Remove the 6 screws.
2. Remove the Upper Deco cover.
3. Remove the Side Deco covers.

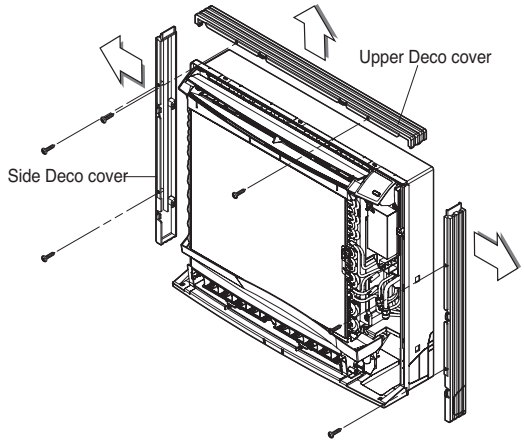

2-3 For Side Piping (Reference 2-2.)

1. Remove the Deco Covers.
2. Remove the slit portions
3. Assemble the Deco Covers.

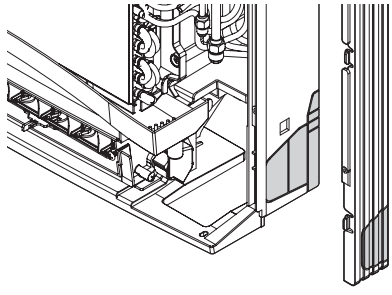

10. Installation

3. Refrigerant Piping

1. The location of hole is different depending on which side of the pipe is taken out.
2. Drill a hole(Ø70mm) in the point indicated by ⊘ symbol in the illustration as below

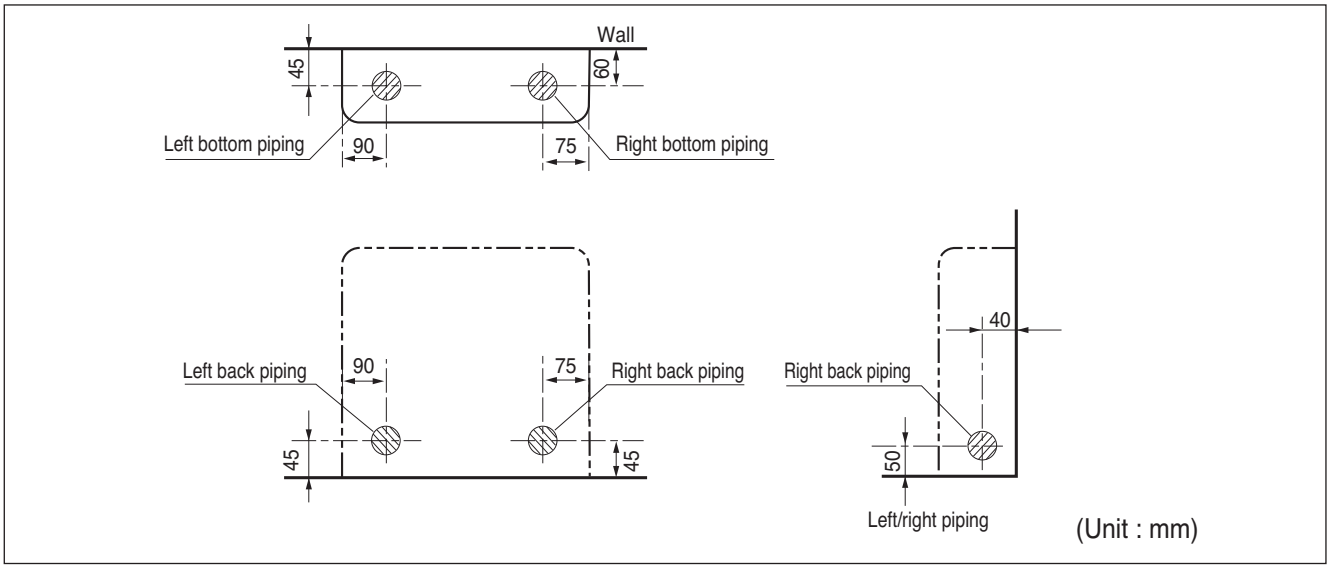

NOTICE

- The suggested shortest pipe length is 5m,in order to avoid noise from the outdoor unit and vibration.

4. Installing Indoor unit

4-1 Installation on the Floor.

1. Fix up using 6 screws for floor installation.

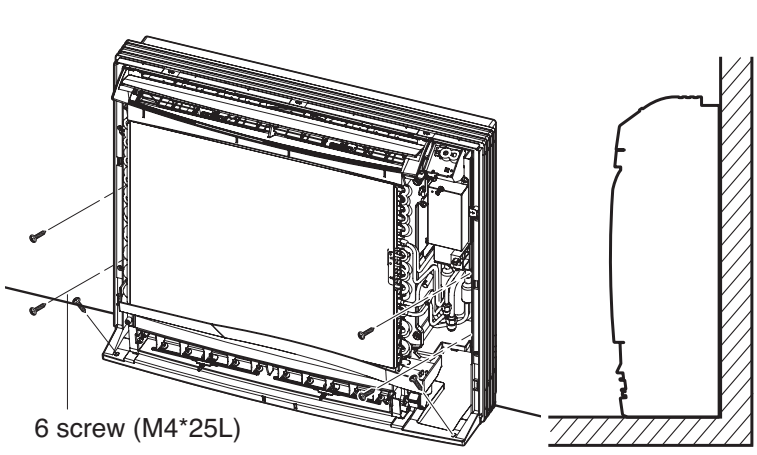

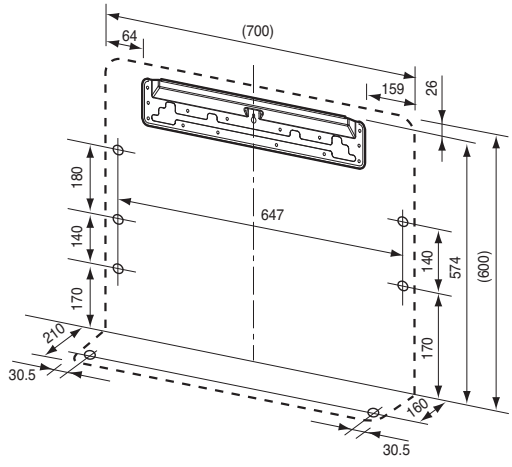

(Unit : mm)

10. Installation

4-2 Installation on the Wall

1. Fix up the installation plate using 5 screws and the indoor unit using 4 screws.
2. The installation plate should be fixed on a wall which can support the weight of the indoor unit.

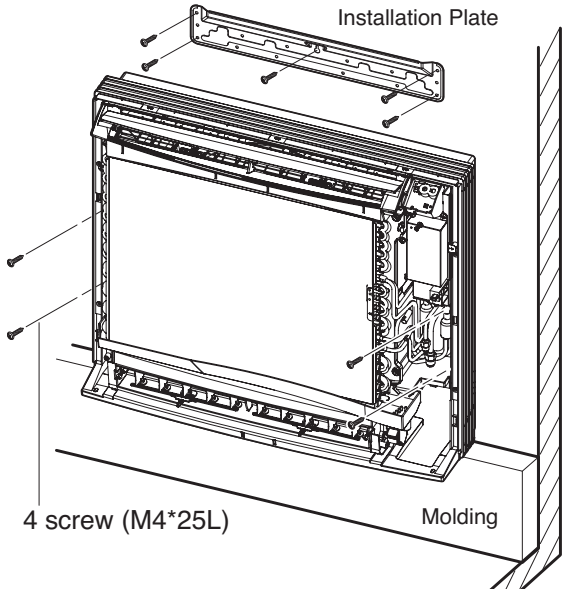

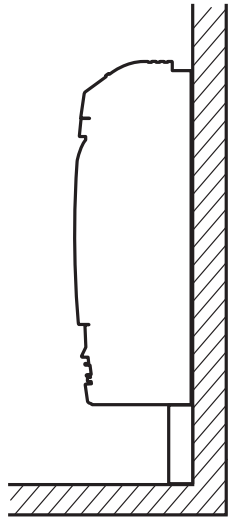

4-3 Half concealed installation.

1. Make a wall hole of the size shown Fig-1.

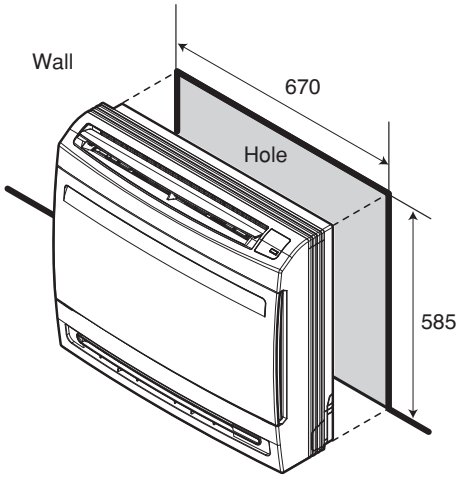

<Fig - 1>

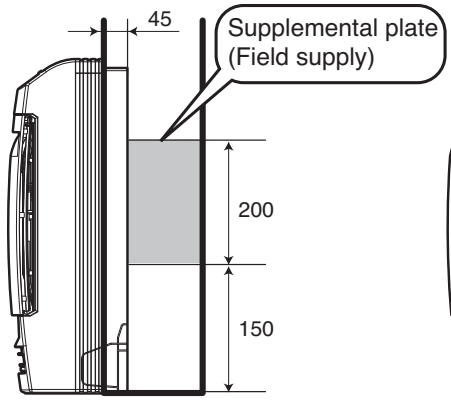

1) Normal concealed

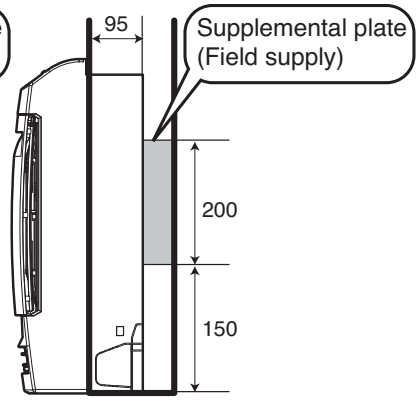

2) Deep concealed

(Unit : mm)

10. Installation

2. Installation of supplemental plate for attaching main unit

• The rear of the unit can be fixed with screws at the points shown in the Fig-2.Be sure to install the supplemental plate in accordance with the depth of the inner wall.

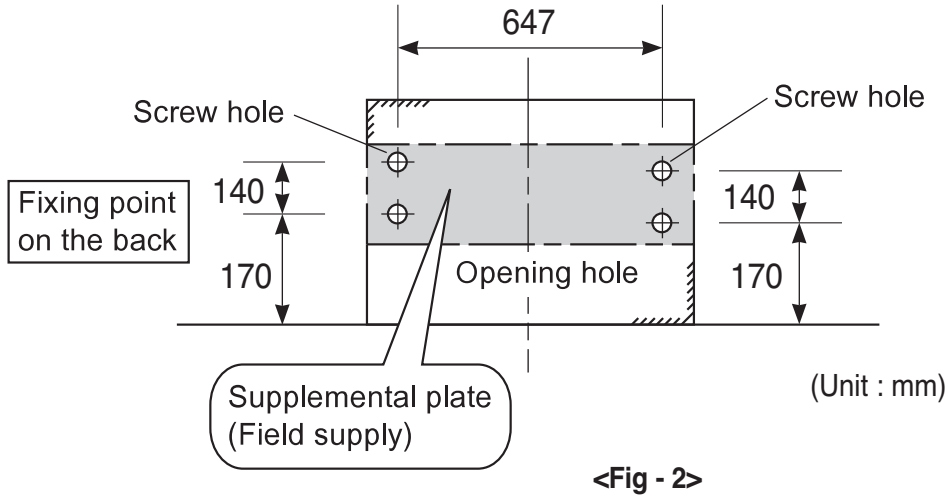

<Fig - 2>

3.Piping Hole

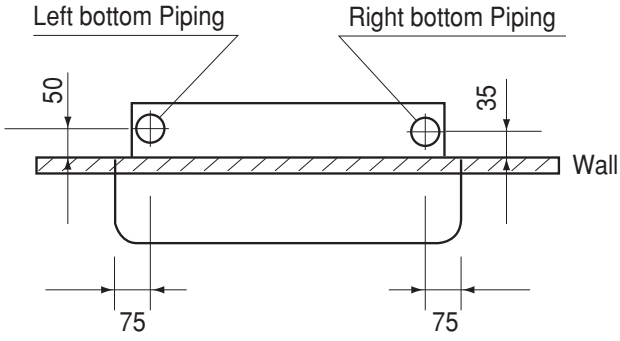

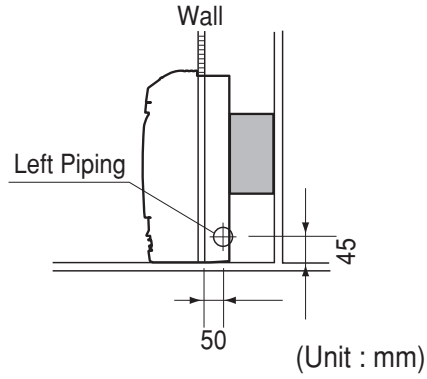

4. Remove the Deco Covers and Fixing Indoor Unit

1) Remove the Deco Covers.

2) Insert the Indoor Unit to the Wall hole.

3) Secure using 6 screws. (shown in the illustration)

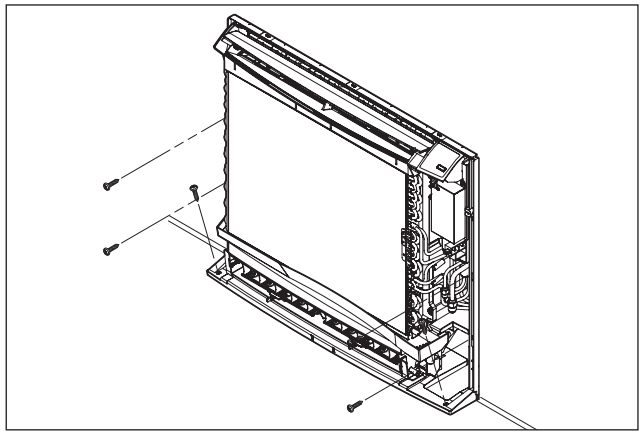

10. Installation

NOTICE

- Check the horizon of Indoor unit with the wall. Please use the Leveler on the drain pan guide.

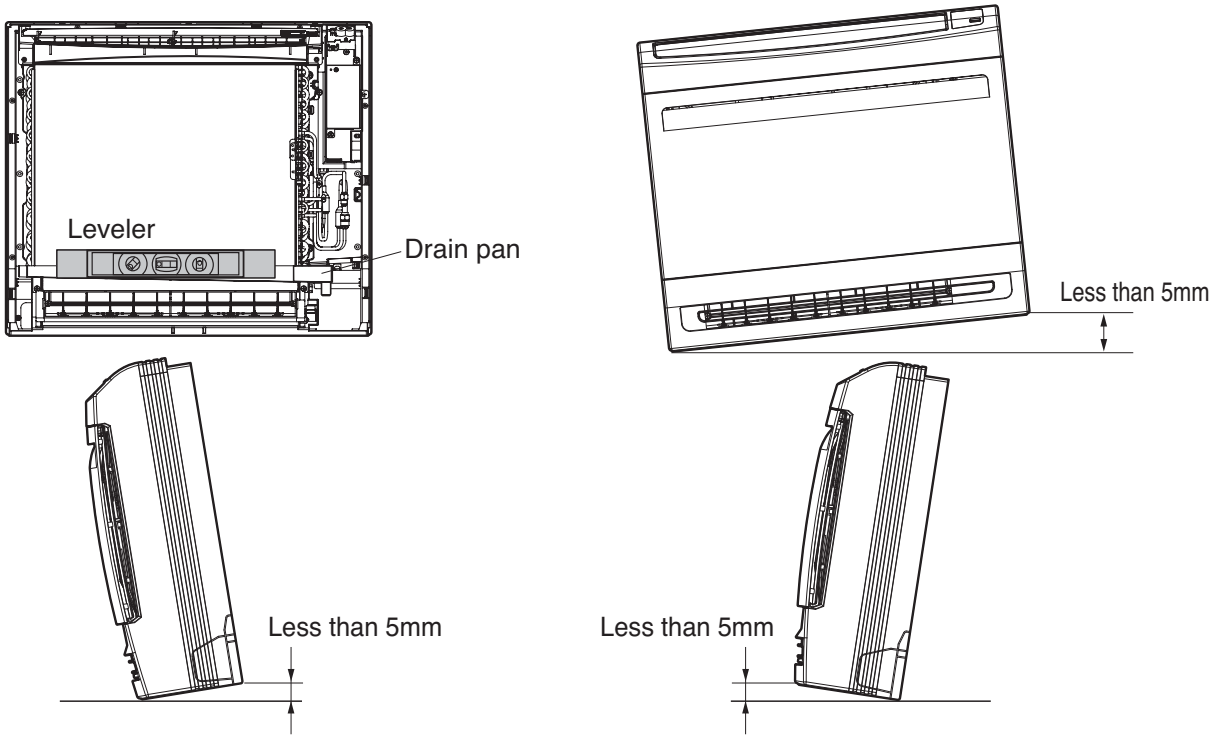

10. Installation

10.3 Connecting the Piping

When you connect the refrigerant pipe, it is easier that you connect the gas pipe first.

1. Hold up the Sensor Link.
2. Separate the Pipe Bracket (2 screws)
3. Connect the refrigerant pipe. (Refer to next page)
4. Assemble the Pipe Bracket (2 screws)
5. Put down the Sensor Link

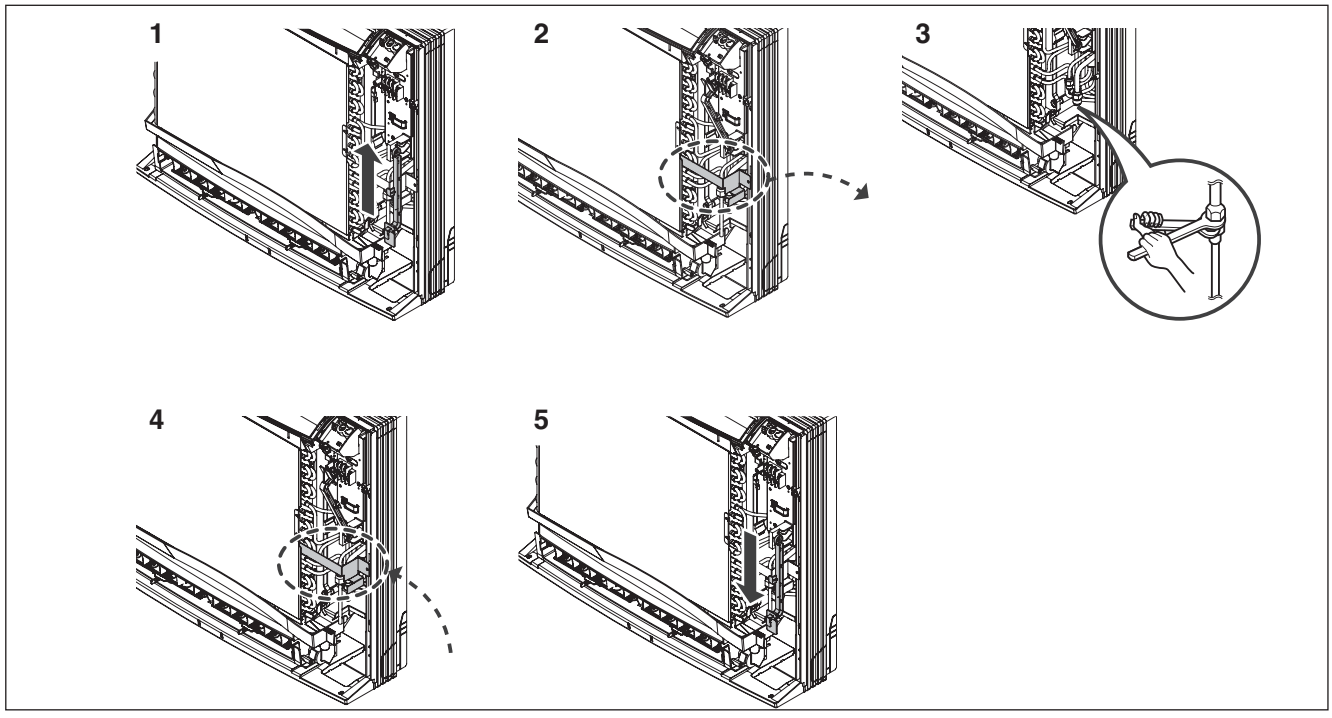

6. After connecting, check the pipe arrangement as per illustration.
7. The piping can be arranged in six ways as shown in the illustration below.

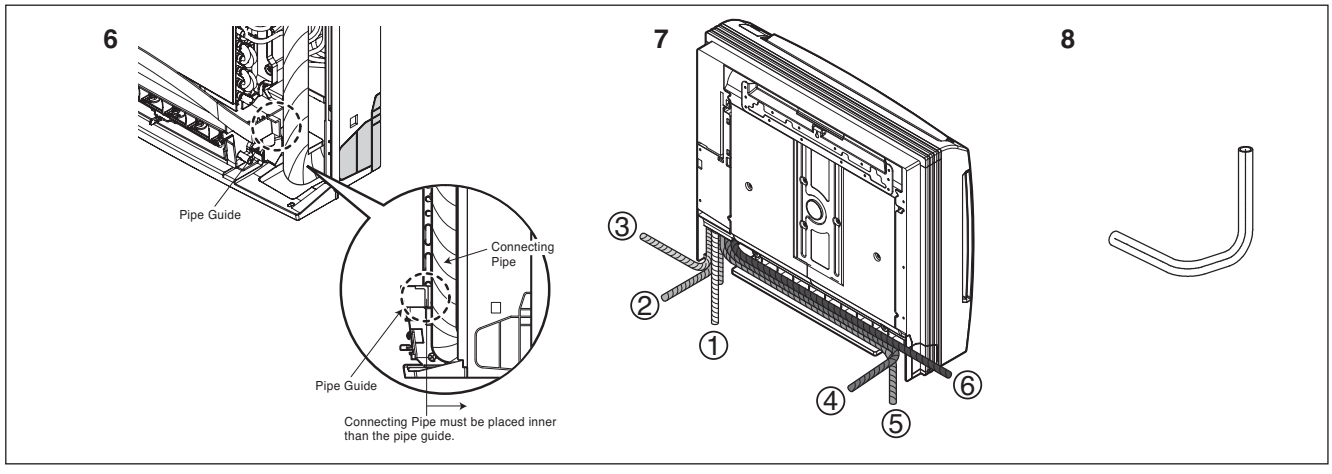

⚠CAUTION

In case of ③ ~ ⑥ , The pipe bending can be used in hand-operated bending machine. Make a pipe of the shape shown pic 8.

10. Installation

⚠CAUTION

If the drain hose is routed inside the room insulate the hose with an insulation material* so that dripping from sweating (condensation) will not damage furniture or floors.

* Foamed polyethylene or equivalent is recommended.

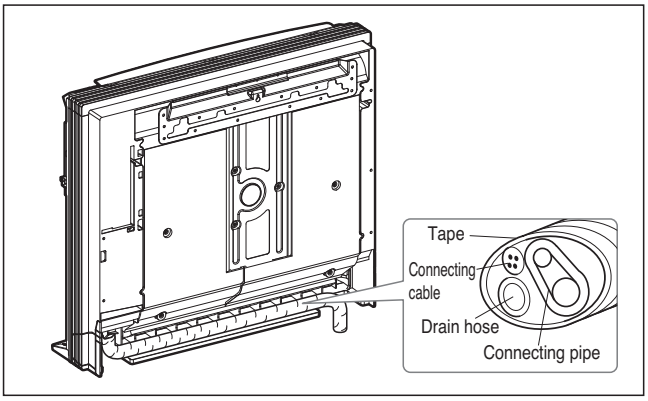

Connecting the installation pipe and drain hose to the indoor unit.

1. Align the center of the pipes and sufficiently tighten the flare nut by hand.
2. Tighten the flare nut with a wrench

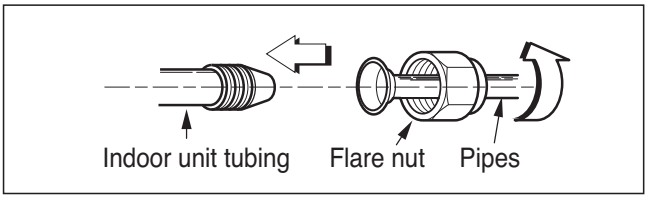

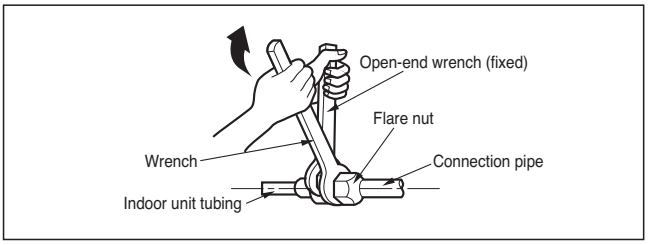

3. When needed to extend the drain hose of indoor unit, assembly the drain pipe as shown on the drawing

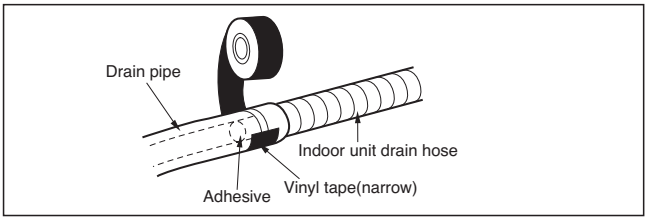

Wrap the insulation material around the connecting portion.

1. Overlap the connection pipe insulation material and the indoor unit pipe insulation material. Bind them together with vinyl tape so that there may be no gap.
2. Wrap the area which accommodates the rear piping housing section with vinyl tape.

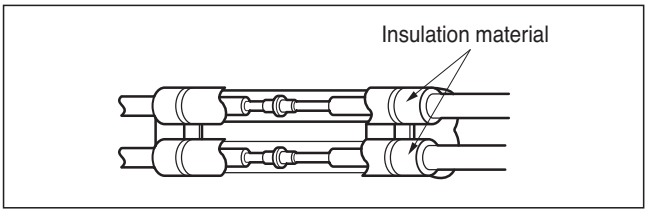

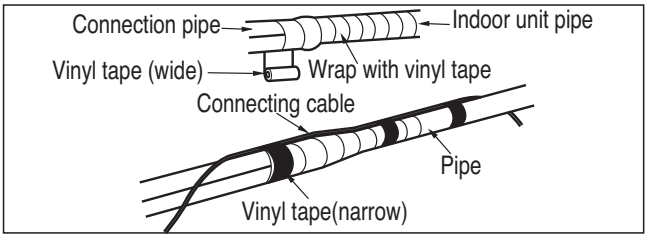

3. Bundle the piping and drain hose together by wrapping them with vinyl tape sufficient enough to cover where they fit into the rear piping housing section.

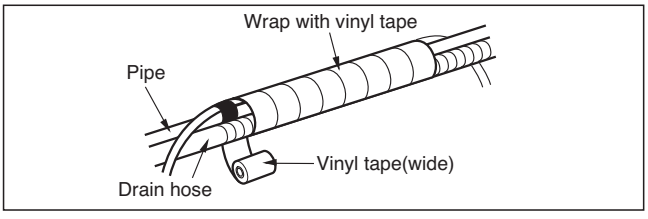

10.4 Wiring Connection

• Connect the wires to the terminals on the control board individually according to the outdoor unit connection.
  • Ensure that the color of the wires of outdoor unit and the terminal No. are the same as those of indoor unit respectively.

[Type 1]

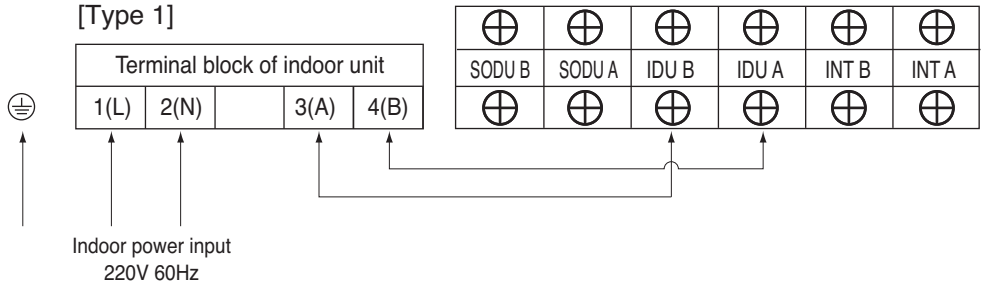

[Type 2]

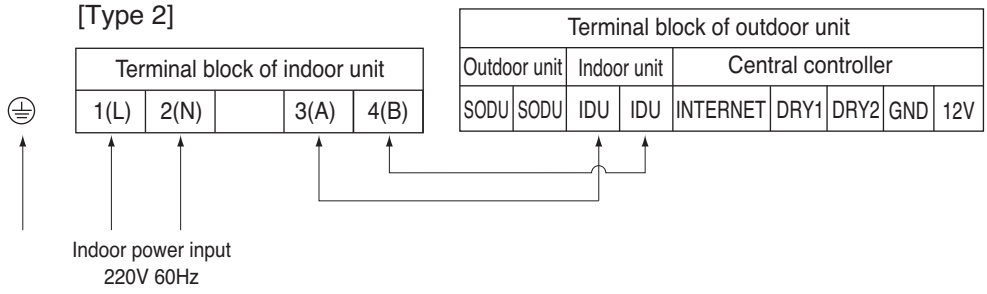

⚠ WARNING

Make sure that the screws of the terminal are free from looseness.

⚠ CAUTION

After the confirmation of the above conditions, prepare the wiring as follows:

1) Never fail to have separate power specially for the air conditioner. As for the method of wiring, follow the circuit diagram pasted on the inside of control box cover.
2) Provide a circuit breaker switch between power source and the unit.
3) The screw which fasten the wiring in the casing of electrical fittings are liable to come loose from vibrations to which the unit is subjected during the course of transportation. Check them and make sure that they are all tightly fastened. (If they are loose, it could give rise to burn-out of the wires.)
4) Confirm the Specification of power source
5) Confirm that electrical capacity is sufficient.
6) Be sure that the starting voltage is maintained at more than 90 percent of the rated voltage marked on the name plate.
7) Confirm that the cable thickness is as specified in the power sources specification. (Particularly note the relation between cable length and thickness.)
8) Do not install the leakage breaker in a place which is wet or moist. Water or moist may cause short circuit.
9) The following troubles would be caused by voltage drop-down.
• Vibration of a magnetic switch, damage on the contact point there of, fuse breaking, disturbance to the normal function of a overload protection device.
• Proper starting power is not given to the compressor.

WIRED REMOTE CONTROLLER INSTALLATION

• Since the room temperature sensor is in the remote controller, the remote controller box should be installed in a place away from direct sunlight, high humidity and direct supply of cold air to maintain proper space temperature.
Install the remote controller about 5ft(1.5m) above the floor in an area with good air circulation at an average temperature.

Do not install the remote controller where it can be affected by:

- Drafts, or dead spots behind doors and in corners.
- Hot or cold air from ducts.
- Radiant heat from sun or appliances.
- Concealed pipes and chimneys.
- Uncontrolled areas such as an outside wall behind the remote controller.
- This remote controller is equipped with a seven segment LED. display. For proper display of the remote controller LED's, the remote controller should be installed properly as shown in Fig.1.
(The standard height is 1.2~1.5 m from floor level.)

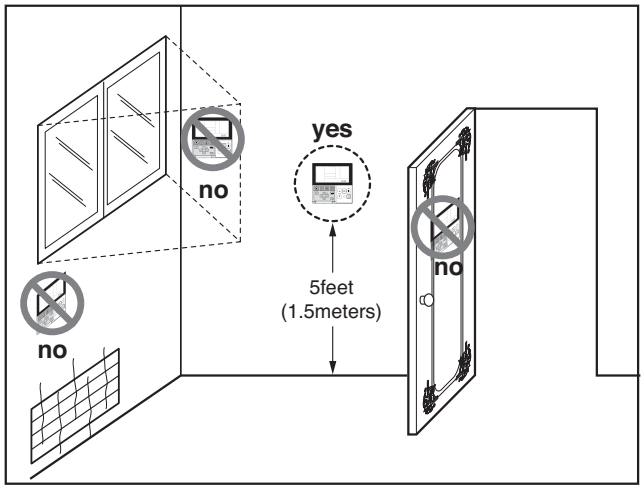

Fig.1 Typical locations for remote controller

11. Accessories

Standard Accessories

Name	Drain Hose	Install Plate	Clamp (Tie wrap)	Other
Quantity	1 EA	1 EA	4 EA	- Allergy Filter - Fixing screw for installation Plate 4*25 mm-5EA - Wood screw for indoor fixation -6EA - Owner's Manual - Installation Manual
Shape	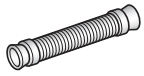		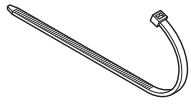	

MULTI V™ Indoor unit

■ Compact Model

1. List of functions
2. Specifications
3. Dimensions
4. Piping Diagrams
5. Wiring Diagrams
6. Capacity Tables
7. Air Velocity and Temperature Distribution
8. Electric Characteristics
9. Sound Levels

1. List of functions

Category	Function	ARNU09GTR*4, ARNU15GTR*4
Air flow	Air supply outlet	4
	Airflow direction control(left & right)	-
	Airflow direction control(up & down)	Auto
	Auto swing(left & right)	-
	Auto swing(up & down)	O
	Airflow steps(fan/cool/heat)	4 / 5 / 4
	Chaos swing	X
	Chaos wind(auto wind)	O
	Jet cool(Power wind)	O
	Swirl wind	O
Air purifying	Deodorizing filter	X
	Plasma air purifier	O(C4/F4 Model only), Option(A4/E4 Model - PTPKQ0)
	Prefilter(washable / anti-fungus)	O
Installation	Drain pump	O
	E.S.P. control	X
	Electric heater(operation)	X
	High ceiling operation	O
Reliability	Hot start	O
	Self diagnosis	O
	Soft dry operation	O
Convenience	Auto changeover	O(Heat recovery)
	Auto cleaning	X
	Auto operation(artificial intelligence)	O(Heat pump or Cooling only)
	Auto restart operation	O
	Child lock	O
	Forced operation	O
	Group control	O
	Sleep mode	O
	Timer(on/off)	O
	Timer(weekly)	O
	Two thermistor control	O
	Elevation Grill	X
	External On/Off	O
Individual control	Wide wired remote controller (RS2)	PQRCVSL0/PQRCVSL0QW
	Wide wired remote controller (RS2 Plus)	PREMTB001/PREMTBB01
	Premium wired remote controller	PREMTA000/PREMTA000A/PREMTA000B
	Simple wired remote controller	PQRCVCL0Q(W)
	Wired remote controller(for hotel use)	PQRCHCA0Q(W)
	Wireless LCD remote control	PQWRH(C)Q0FDB
Special function kit	Zone control	-
	CTIE	-
	Electro thermostat	-
	Remote temperature sensor	PQRSTA0
	Group control wire	PZCWRCG3
	Dry contact	PDRYCB000/PDRYCB100/PDRYCB300/PDRYCB400/PDRYCB500

O : Applied X : Not applied – : No relation

Option : Model name & price are different according to options, and assembled in factory with main unit.

Accessory : Installed at field, ordered and purchased separately by the corresponding model name, supplied with separate package.

* Plasma kit and Elevation Grille are not applicable at the same time

2. Specifications

* Model Name
E:Basic, F:Plasma

Type			4 Way Ceiling Cassette
Model		Unit	ARNU09GTR*4
Cooling Capacity		kW	2.8
		kcal/h	2,400
		Btu/h	9,600
Heating Capacity		kW	3.2
		kcal/h	2,800
		Btu/h	10,900
Casing			Galvanized Steel Plate
Dimensions (WxHxD)	Body	mm	570 x 214 x 570
		inch	22-7/16 x 8-7/16 x 22-7/16
	Decoration Panel #1	mm	700 x 22 x 700
		inch	27-9/16 x 7/8 x 27-9/16
	Decoration Panel #2	mm	620 x 34 x 620
		inch	24-13/32 x 1-11/32 x 24-13/32
Coil	Rows x Columns x FPI		1 x 8 x 18
	Face Area	m^2	0.21
Fan	Type		Turbo Fan
	Motor Output x Number	W	43 x 1
	Running Current	A	0.2
	Air Flow Rate(H / M / L)	CMM	8.2 / 7.4 / 6.9
		cfm	289 / 261 / 244
	Drive		Direct
	Motor type		BLDC
Temperature Control			Microprocessor, Thermostat for cooling and heating
Sound Absorbing Thermal Insulation Material			Foamed polystrene
Safety Device			Fuse
Pipe Connections	Liquid Side	mm(inch)	Ø6.35(1/4)
	Gas Side	mm(inch)	Ø12.7(1/2)
	Drain Pipe(Internal Dia.)	mm(inch)	25(1)
Net Weight	Body	kg(lbs)	12.6(27.8)
	Packaged	kg(lbs)	15.3(33.7)
Noise Level(Sound Press, 1.5m, H / M / L)		dB(A)	33 / 31 / 28
Power Supply		Ø, V, Hz	1, 220-240, 50
			1, 220, 60
Refrigerant Control			EEV
Transmission cable		mm^2	CVV-SB 1.0~1.5 x 2C
Panel Color			Morning fog
Panel Name(Accessory)			PT-UQC / PT-QCHW0

Notes:

1. Capacities are based on the following conditions:
   Cooling
   - Indoor temp. 27°C[80.6°F]DB/ 19°C[66.2°F]WB
   - Outdoor temp. 35°C[95°F]DB/ 24°C[75.2°F]WB
   - Interconnecting Piping Length 7.5m
   - Level Difference of Zero

   Heating
   - Indoor temp. 20°C[68°F]DB/ 15°C[59°F]WB
   - Outdoor temp. 7°C[44.6°F]DB/ 6°C[42.8°F]WB
   - Interconnecting Piping Length 7.5m
   - Level Difference of Zero
2. Capacities are Net Capacities
3. Due to our policy of innovation some specifications may be changed without prior notification
4. Wiring cable size must comply with the applicable local and national codes. And “Electric characteristics” chapter should be considered for electrical work and design. Especially the power cable and circuit breaker should be selected in accordance with that.
5. EEV: Electronic Expansion Valve
6. Anechoic chamber conversion value is measured at 1.5 m downward from unit centre.
   The values depends on the ambient conditions and values are normally higher in actual operation.
7. For the detail information of installation, please refer to the each installation section of standard model part.

Conversion Formula
kcal/h= kW x 860
Btu/h = kW x 3412
cfm = m^3/min x 35.3
l/s = CMM x 1000/60

2. Specifications

* Model Name
A:Basic, C:Plasma

Type			4 Way Ceiling Cassette
Model		Unit	ARNU15GTR*4
Cooling Capacity		kW	4.5
		kcal/h	3,900
		Btu/h	15,400
Heating Capacity		kW	5.0
		kcal/h	4,300
		Btu/h	17,100
Casing			Galvanized Steel Plate
Dimensions (WxHxD)	Body	mm	570 x 214 x 570
		inch	22-7/16 x 8-7/16 x 22-7/16
	Decoration Panel #1	mm	700 x 22 x 700
		inch	27-9/16 x 7/8 x 27-9/16
	Decoration Panel #2	mm	620 x 34 x 620
		inch	24-13/32 x 1-11/32 x 24-13/32
Coil	Rows x Columns x FPI		2 x 8 x 18
	Face Area	m^2	0.21
Fan	Type		Turbo Fan
	Motor Output x Number	W	43 x 1
	Running Current	A	0.2
	Air Flow Rate(H / M / L)	CMM	9.2 / 7.5 / 7.0
		cfm	325 / 265 / 247
	Drive		Direct
	Motor type		BLDC
Temperature Control			Microprocessor, Thermostat for cooling and heating
Sound Absorbing Thermal Insulation Material			Foamed polystrene
Safety Device			Fuse
Pipe Connections	Liquid Side	mm(inch)	Ø6.35(1/4)
	Gas Side	mm(inch)	Ø12.7(1/2)
	Drain Pipe(Internal Dia.)	mm(inch)	25(1)
Net Weight	Body	kg(lbs)	13.7(30.2)
	Packaged	kg(lbs)	16.4(36.1)
Noise Level(Sound Press, 1.5m, H / M / L)		dB(A)	37 / 33 / 30
Power Supply		Ø, V, Hz	1, 220-240, 50
			1, 220, 60
Refrigerant Control			EEV
Transmission cable		mm^2	CVV-SB 1.0~1.5 x 2C
Panel Color			Morning fog
Panel Name(Accessory)			PT-UQC / PT-QCHW0

Notes:

1. Capacities are based on the following conditions:
   Cooling
   - Indoor temp. 27°C[80.6°F]DB/ 19°C[66.2°F]WB
   - Outdoor temp. 35°C[95°F]DB/ 24°C[75.2°F]WB
   - Interconnecting Piping Length 7.5m
   - Level Difference of Zero

   Heating
   - Indoor temp. 20°C[68°F]DB/ 15°C[59°F]WB
   - Outdoor temp. 7°C[44.6°F]DB/ 6°C[42.8°F]WB
   - Interconnecting Piping Length 7.5m
   - Level Difference of Zero
2. Capacities are Net Capacities
3. Due to our policy of innovation some specifications may be changed without prior notification
4. Wiring cable size must comply with the applicable local and national codes. And “Electric characteristics” chapter should be considered for electrical work and design. Especially the power cable and circuit breaker should be selected in accordance with that.
5. EEV: Electronic Expansion Valve
6. Anechoic chamber conversion value is measured at 1.5 m downward from unit centre.
   The values depends on the ambient conditions and values are normally higher in actual operation.
7. For the detail information of installation, please refer to the each installation section of standard model part.

Conversion Formula
kcal/h= kW x 860
Btu/h = kW x 3412
cfm = m^3/min x 35.3
l/s = CMM x 1000/60

3. Dimensions

Ceiling Cassette 4-way

ARNU15GTR*4
ARNU09GTR*4

(unit : mm)

Number	Name	Description
1	Liquid pipe connection	Unit size(5k):Ø6.35
2	Gas pipe connection	Unit size(5k):Ø12.7
3	Drain pipe connection	VP25(Ø32)
4	Power supply connection	
5	Air discharge grill	
6	Air suction grill	

■ Note

1. Unit should be installed in compliance with the installation manual in the product box.
2. Unit shall be grounded in accordance with the local regulations or applicable national codes.

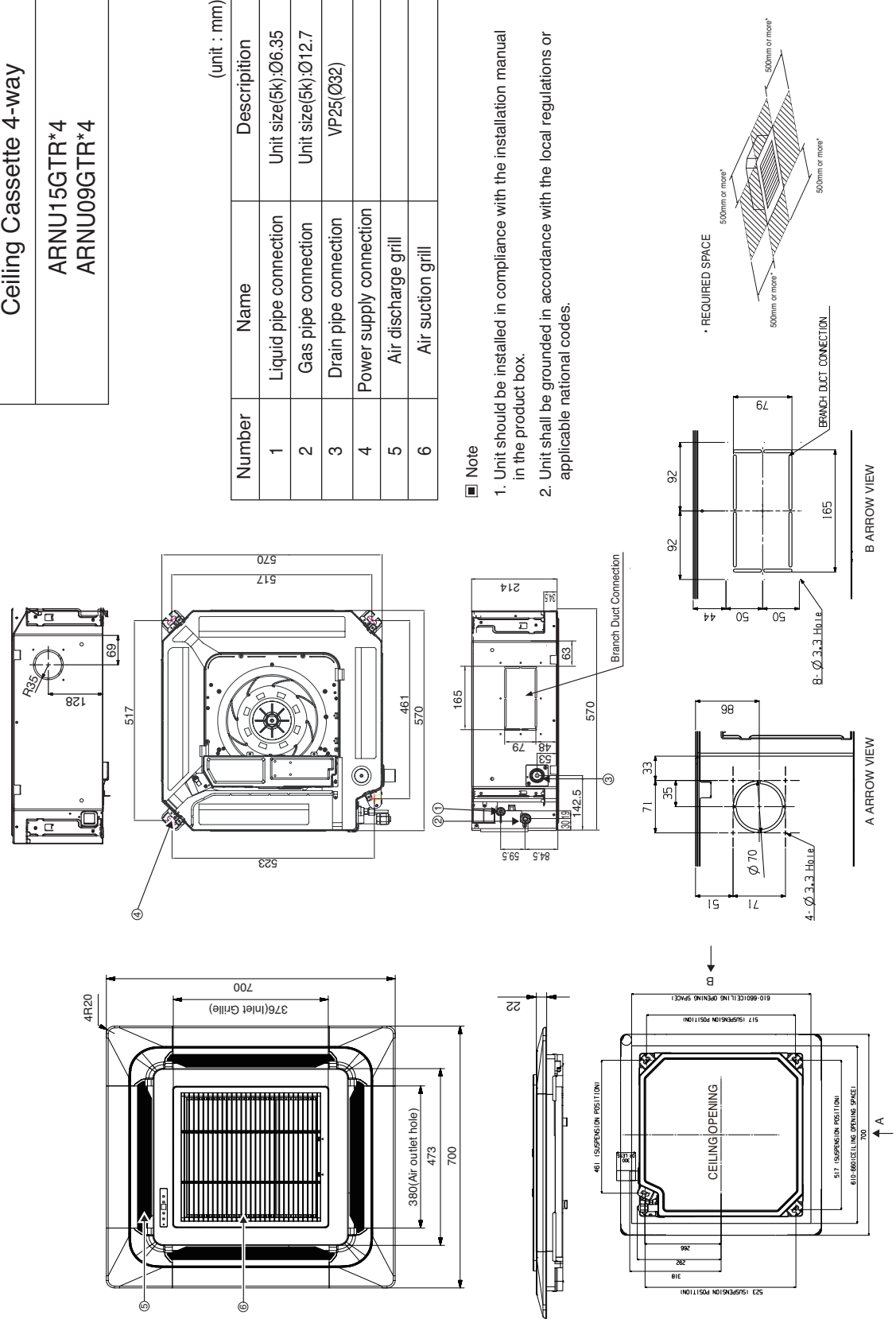

3. Dimensions

Ceiling Cassette 4-way

ARNU15GTR*4
ARNU09GTR*4

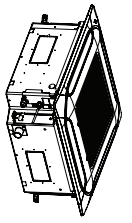

3D View

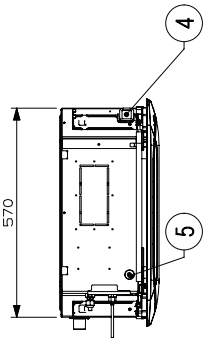

Installation position of body

No.	Part Name	Description
12	Fresh Air Intake Hole	Knock-out type
11	Flexible Drain Hose	Supplied with product
10	Decoration Corner Display Cover	Supplied with panel
9	Decoration Corner Cover	Supplied with panel
8	Decoration Panel(Accessory)	PT-QCHW0
7	Air Outlet	-
6	Air Intake	-
5	Wired remote controller wire routing hole	-
4	Power and Communication cable routing hole	-
3	Drain Pipe Connection	-
2	Liquid Pipe Connection	-
1	Gas Pipe Connection	-

View A
Fresh Air Intake hole

Symbols

View Direction
Datum line
Refrigerant/Drain Piping Direction

Note

1. Unit should be installed in compliance with the installation manual in the product box.
2. Unit should be grounded in accordance with the local regulations or applicable national codes.
3. All electrical components and materials to be supplied from the site must comply with the local regulations or international codes.
4. Electric characteristics chapter should be consid-ered for electrical work and design. Especially, the power cable and circuit breaker should be selected in accordance with that.

[Unit: mm]

LG Electronics

CHASSIS CODE: TR

4. Piping Diagrams

TR Chassis

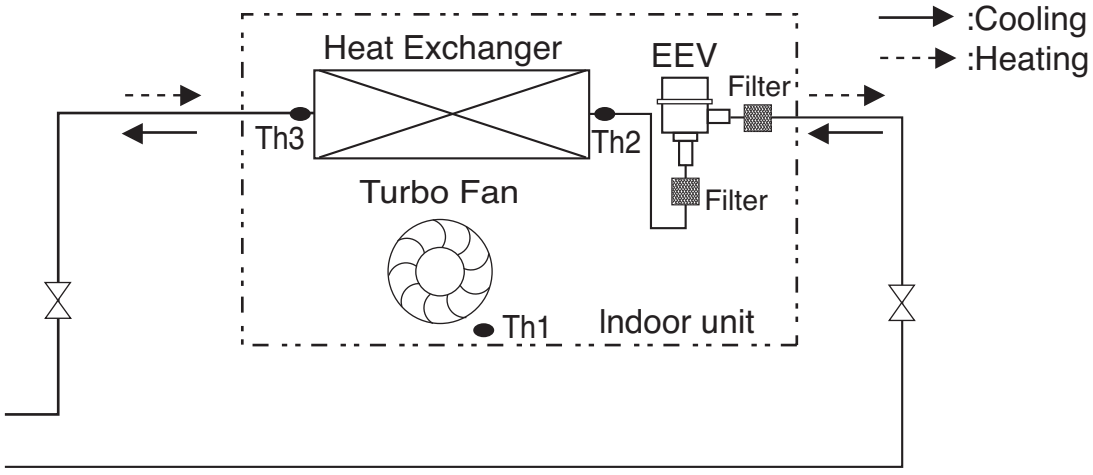

Refrigerant pipe connection port diameter

[Unit: mm(inch)]

Model	Gas	Liquid
ARNU09GTR*4	Ø12.7(1/2)	Ø6.35(1/4)
ARNU15GTR*4	Ø12.7(1/2)	Ø6.35(1/4)

LOC.	Description
Th1	Room thermistor
Th2	Pipe in thermistor
Th3	Pipe out thermistor

5. Wiring Diagrams

TR Chassis

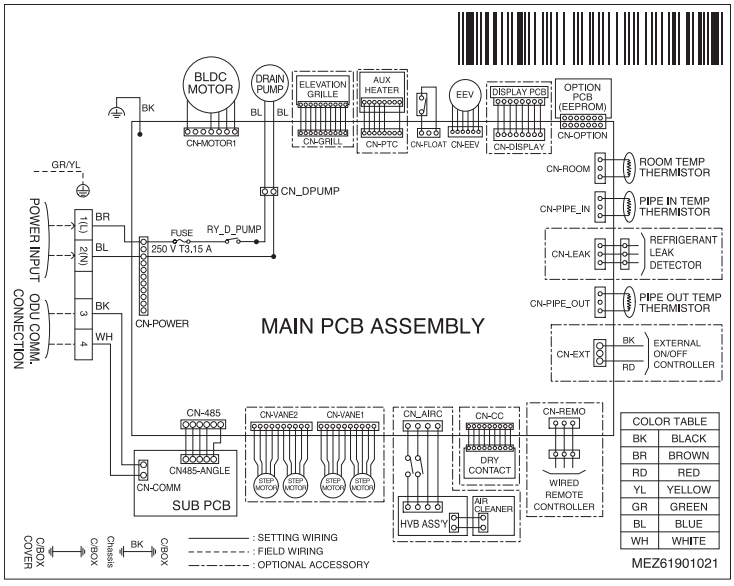

CONNECTOR NUMBER	LOCATION POINT	FUNCTION
CN-MOTOR1	Fan motor output	Motor output of BLDC
CN_DPUMP	Drain pump output	AC output for drain pump
CN-GRILL	Elevation grill	Elevation grill line
CN-PTC	Aux heater	Aux heater line
CN-LEAK	Refrigerant leak detector	Refrigerant leak detector line
CN-AIRC	Air cleaner	Air cleaner line
CN-DISPLAY	Display	Display of indoor status
CN-OPTION	Option pwb.	Communication between main and option
CN-EEV	EEV Output	EEV Control output
CN-FLOAT	Float switch input	Float switch sensing
CN-ROOM	Room sensor	Room air thermistor
CN-PIPE_IN	Suction pipe sensor	Pipe in thermistor
CN-PIPE_OUT	Discharge pipe sensor	Pipe out thermistor
CN-REMO	Remote controller	Remote control line
CN-CC	Dry contact	Dry contact line
CN-COMM	Communication	Communication between indoor and outdoor
CN-VANE1	Step motor	Step motor output
CN-VANE2	Step motor	Step motor output
CN-485	Communication	Connection between indoor and outdoor
CN-EXT	External On/Off	External On/Off signal input

Dip Switch Setting		Off	On	Remarks
SW3	GROUP	Master	Slave	Group Control setting using Wired Remote Controller
SW4	DRY CONTACT	Variable	Auto	Old Dry Contact Mode Setting 1. Variable : Auto/Manual Mode can be chosen by Wide wired remote controller or Wireless remote controller (When shipped from Factory → Manual Mode) 2. Auto : For Dry Contact, it is always Auto mode.
SW5	EXTRA 1	Off	On	1. Duct model -. OFF : Default(not operate continuosly) -. ON : Fan operate continuosly 2. Cassette Model : No Function 3. Ceiling Suspended Model -. OFF : Ceiling(default) -. ON : Floor

⚠ CAUTION

For Multi V models, Dip switch 1,2,6,7,8 must be set OFF
Those are used for the other model.

6. Capacity Tables

6.1 Cooling Capacity

Cooling capacity

Capacity Index	Outdoor air temp. (DB, °C)	Indoor air temp. (DB/WB, °C)													
		20		23		26		27		28		30		32	
		14		16		18		19		20		22		24	
		TC	SHC	TC	SHC	TC	SHC	TC	SHC	TC	SHC	TC	SHC	TC	SHC
		kW	kW	kW	kW	kW	kW	kW	kW	kW	kW	kW	kW	kW	kW
2.8	10	1.9	1.6	2.2	1.8	2.6	2.0	2.8	2.0	3.0	2.1	3.4	2.2	3.7	2.1
	12	1.9	1.6	2.2	1.8	2.6	2.0	2.8	2.0	3.0	2.1	3.4	2.2	3.6	2.1
	14	1.9	1.6	2.2	1.8	2.6	2.0	2.8	2.0	3.0	2.1	3.4	2.2	3.6	2.1
	16	1.9	1.6	2.2	1.8	2.6	2.0	2.8	2.0	3.0	2.1	3.4	2.2	3.5	2.0
	18	1.9	1.6	2.2	1.8	2.6	2.0	2.8	2.0	3.0	2.1	3.4	2.2	3.5	2.0
	20	1.9	1.6	2.2	1.8	2.6	2.0	2.8	2.0	3.0	2.1	3.4	2.2	3.4	2.0
	21	1.9	1.6	2.2	1.8	2.6	2.0	2.8	2.0	3.0	2.1	3.4	2.2	3.4	2.0
	23	1.9	1.6	2.2	1.8	2.6	2.0	2.8	2.0	3.0	2.1	3.4	2.2	3.4	2.0
	25	1.9	1.6	2.2	1.8	2.6	2.0	2.8	2.0	3.0	2.1	3.3	2.1	3.3	1.9
	27	1.9	1.6	2.2	1.8	2.6	2.0	2.8	2.0	3.0	2.1	3.2	2.1	3.3	1.9
	29	1.9	1.6	2.2	1.8	2.6	2.0	2.8	2.0	3.0	2.1	3.2	2.0	3.2	1.9
	31	1.9	1.6	2.2	1.8	2.6	2.0	2.8	2.0	3.0	2.1	3.2	2.0	3.2	1.8
	33	1.9	1.6	2.2	1.8	2.6	2.0	2.8	2.0	3.0	2.1	3.1	2.0	3.1	1.8
	35	1.9	1.6	2.2	1.8	2.6	2.0	2.8	2.0	3.0	2.1	3.0	2.0	3.1	1.8
	37	1.9	1.6	2.2	1.8	2.6	2.0	2.8	2.0	2.9	2.0	3.0	1.9	3.0	1.8
	39	1.9	1.6	2.2	1.8	2.6	2.0	2.8	2.0	2.8	2.0	2.9	1.9	3.0	1.7
4.5	10	3.0	2.6	3.6	2.8	4.2	3.1	4.5	3.1	4.8	3.2	5.4	3.4	5.9	3.3
	12	3.0	2.6	3.6	2.8	4.2	3.1	4.5	3.1	4.8	3.2	5.4	3.4	5.8	3.3
	14	3.0	2.6	3.6	2.8	4.2	3.1	4.5	3.1	4.8	3.2	5.4	3.4	5.8	3.2
	16	3.0	2.6	3.6	2.8	4.2	3.1	4.5	3.1	4.8	3.2	5.4	3.4	5.7	3.2
	18	3.0	2.6	3.6	2.8	4.2	3.1	4.5	3.1	4.8	3.2	5.4	3.4	5.6	3.2
	20	3.0	2.6	3.6	2.8	4.2	3.1	4.5	3.1	4.8	3.2	5.4	3.4	5.5	3.1
	21	3.0	2.6	3.6	2.8	4.2	3.1	4.5	3.1	4.8	3.2	5.4	3.4	5.5	3.1
	23	3.0	2.6	3.6	2.8	4.2	3.1	4.5	3.1	4.8	3.2	5.4	3.4	5.4	3.1
	25	3.0	2.6	3.6	2.8	4.2	3.1	4.5	3.1	4.8	3.2	5.3	3.3	5.3	3.0
	27	3.0	2.6	3.6	2.8	4.2	3.1	4.5	3.1	4.8	3.2	5.2	3.2	5.3	3.0
	29	3.0	2.6	3.6	2.8	4.2	3.1	4.5	3.1	4.8	3.2	5.1	3.2	5.2	2.9
	31	3.0	2.6	3.6	2.8	4.2	3.1	4.5	3.1	4.8	3.2	5.1	3.1	5.1	2.9
	33	3.0	2.6	3.6	2.8	4.2	3.1	4.5	3.1	4.8	3.2	4.9	3.1	5.0	2.8
	35	3.0	2.6	3.6	2.8	4.2	3.1	4.5	3.1	4.8	3.2	4.9	3.1	4.9	2.8
	37	3.0	2.6	3.6	2.8	4.2	3.1	4.5	3.1	4.7	3.1	4.8	3.0	4.9	2.8
	39	3.0	2.6	3.6	2.8	4.2	3.1	4.5	3.1	4.6	3.1	4.7	2.9	4.8	2.7

Notes:

TC: Total Capacity(kW)

SHC: Sensible Heat Capacity(kW)

1. Capacity tables show the representative value of conditions which may occur.
2. Refer to Capacity Correction Factor in the outdoor unit PDB for the actual performance data of each indoor unit and outdoor unit combination.

6. Capacity Tables

6.2 Heating Capacity

Heating capacity

Capacity Index	Outdoor air temp.		Indoor air temp. (DB, °C)					
			16	18	20	21	22	24
	DB(°C)	WB(°C)	TC	TC	TC	TC	TC	TC
			kW	kW	kW	kW	kW	kW
2.8	-24.8	0	1.9	1.9	1.8	1.8	1.8	1.8
	-21.8	-22.0	2.2	2.2	2.2	2.2	2.2	2.2
	-19.8	-20.0	2.4	2.4	2.3	2.3	2.3	2.3
	-18.8	-19.0	2.4	2.4	2.4	2.4	2.4	2.4
	-16.7	-17.0	2.5	2.5	2.5	2.5	2.5	2.5
	-14.7	-15.0	2.7	2.7	2.6	2.6	2.6	2.6
	-12.6	-13.0	2.8	2.8	2.8	2.8	2.7	2.7
	-10.5	-11.0	2.9	2.9	2.9	2.9	2.9	2.8
	-9.5	-10.0	3.0	3.0	2.9	2.9	2.9	2.8
	-8.5	-9.1	3.0	3.0	3.0	3.0	3.0	2.8
	-7.0	-7.6	3.1	3.1	3.1	3.1	3.0	2.8
	-5.0	-5.6	3.2	3.2	3.2	3.1	3.0	2.8
	-3.0	-3.7	3.4	3.3	3.2	3.1	3.0	2.8
	0.0	-0.7	3.4	3.3	3.2	3.1	3.0	2.8
	3.0	2.2	3.5	3.4	3.2	3.1	3.0	2.8
	5.0	4.1	3.6	3.4	3.2	3.1	3.0	2.8
	7.0	6.0	3.6	3.4	3.2	3.1	3.0	2.8
	9.0	7.9	3.6	3.4	3.2	3.1	3.0	2.8
	11.0	9.8	3.6	3.4	3.2	3.1	3.0	2.8
	13.0	11.8	3.6	3.4	3.2	3.1	3.0	2.8
	15.0	13.7	3.6	3.4	3.2	3.1	3.0	2.8
4.5	-24.8	-25.0	2.9	2.9	2.9	2.9	2.9	2.9
	-21.8	-22.0	3.5	3.5	3.5	3.5	3.5	3.5
	-19.8	-20.0	3.7	3.7	3.7	3.7	3.7	3.6
	-18.8	-19.0	3.8	3.7	3.7	3.7	3.7	3.7
	-16.7	-17.0	3.9	3.9	3.9	3.9	3.9	3.9
	-14.7	-15.0	4.1	4.1	4.1	4.1	4.1	4.1
	-12.6	-13.0	4.3	4.3	4.3	4.3	4.3	4.3
	-10.5	-11.0	4.5	4.5	4.5	4.5	4.5	4.4
	-9.5	-10.0	4.6	4.6	4.6	4.6	4.6	4.4
	-8.5	-9.1	4.7	4.7	4.7	4.7	4.7	4.4
	-7.0	-7.6	4.8	4.8	4.8	4.8	4.7	4.4
	-5.0	-5.6	5.0	5.0	5.0	4.8	4.7	4.4
	-3.0	-3.7	5.3	5.1	5.0	4.8	4.7	4.4
	0.0	-0.7	5.3	5.2	5.0	4.8	4.7	4.4
	3.0	2.2	5.5	5.3	5.0	4.8	4.7	4.4
	5.0	4.1	5.6	5.3	5.0	4.8	4.7	4.4
	7.0	6.0	5.6	5.3	5.0	4.8	4.7	4.4
	9.0	7.9	5.6	5.3	5.0	4.8	4.7	4.4
	11.0	9.8	5.6	5.3	5.0	4.8	4.7	4.4
	13.0	11.8	5.6	5.3	5.0	4.8	4.7	4.4
	15.0	13.7	5.6	5.3	5.0	4.8	4.7	4.4

Notes:

TC: Total Capacity(kW)

1. Capacity tables show the representative value of conditions which may occur.
2. is shown as reference. When selecting the outdoor units, avoid the outdoor air temperature range shown by .
3. In accordance with operation limits of outdoor unit, applicable range of capacity tables is different.
4. Refer to Capacity Correction Factor in the outdoor unit PDB for the actual performance data of each indoor unit and outdoor unit combination.

7. Air Velocity and Temperature Distribution(Reference Data)

ARNU09GTR*4

Cooling

Discharge angle: 40°

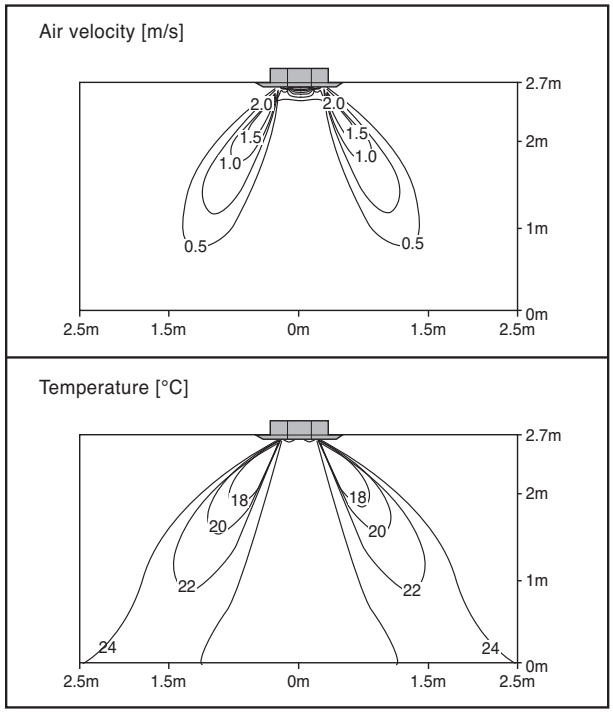

Heating

Discharge angle: 50°

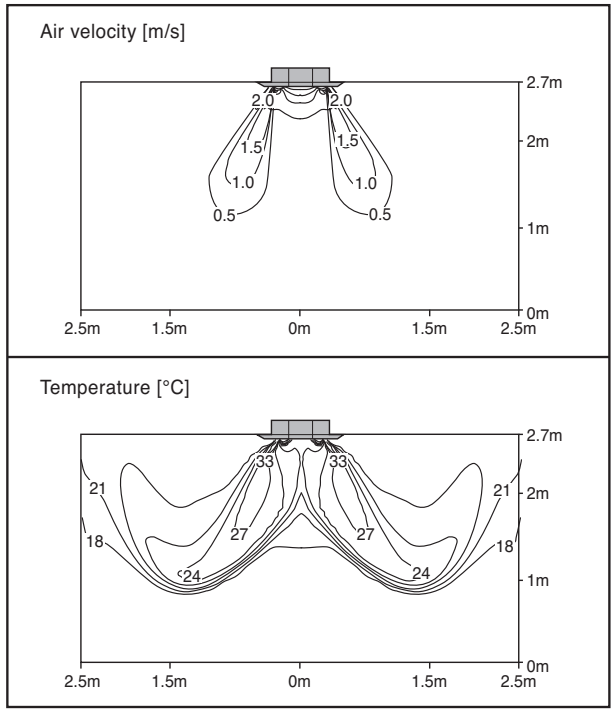

ARNU15GTR*4

Cooling

Discharge angle: 40°

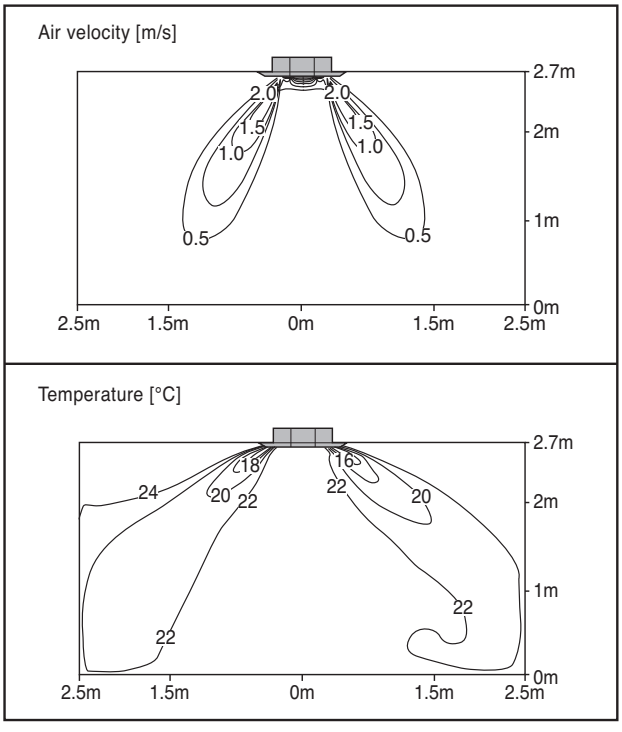

Heating

Discharge angle: 50°

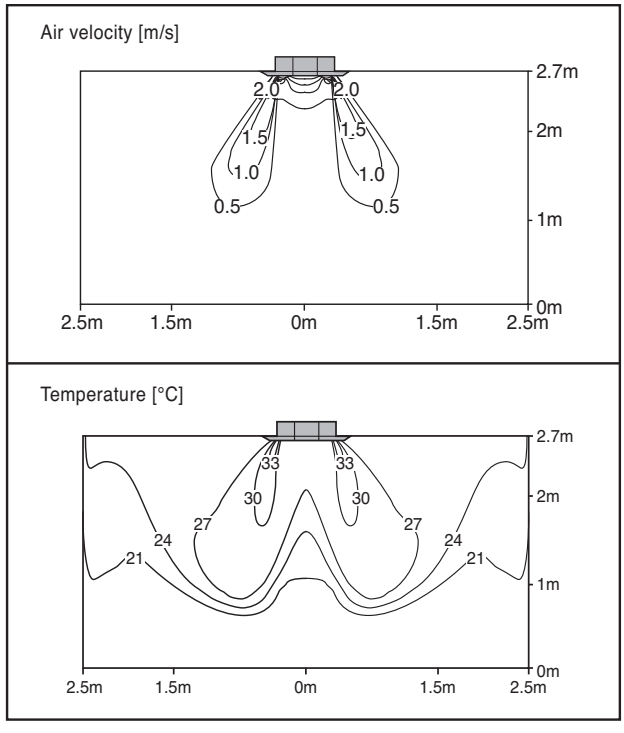

Note: Fan operating mode is high.

8. Electric Characteristicss

Units					Power Supply		IFM		Input(W)	
Model	Type	Hz	Volts	Voltage Range	MCA	MFA	kW	FLA	Cooling	Heating
ARNU09GTR*4	TR	50	220-240	Max:264 Min:198	0.25	15	0.043	0.2	30	30
ARNU15GTR*4	TR				0.25	15	0.043	0.2	30	30
ARNU09GTR*4	TR	60	220	Max:242 Min:198	0.25	15	0.043	0.2	30	30
ARNU15GTR*4	TR				0.25	15	0.043	0.2	30	30

Symbols:

MCA : Min, Circuit Amps(A)
MFA : Max. Fuse Amps(see note 5)
kW : Fan Motor Rated Output(kW)
FLA : Full Load Amps(A)
IFM : Indoor Fan Motor

Note :

1. Voltage range
   Units are suitable for use on electrical systems where voltage supplied to unit terminals is not below or above the listed range limits,
2. Maximum allowable voltage unbalance between phases is 2%
3. MCA/MFA
   MCA=1.25 x FLA
   MFA≤ 4 x FLA
   (Next lower standard fuse rating. Min. 15A)
4. Select wire size based on the MCA
5. Instead of fuse, use Circuit Breaker.

9. Sound Levels

9.1 Sound Pressure Levels

■ Ceiling Cassette 4-way

Overall

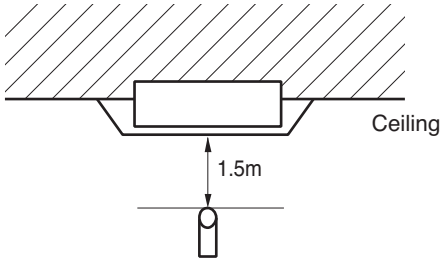

❉ Measuring place : Anechoic chamber

Notes:

1. Sound measured at 1.5m away from the center of the unit
2. Operating conditionl
   - Power source : 220-240V 50Hz / 220V 60Hz
   - Cooling : Indoor temperature (27°C DB, 19°C WB), Outdoor temperature (35°C DB, 24°C WB)
   - Heating : Indoor temperature (20°C DB, 15°C WB), Outdoor temperature (7°C DB, 6°C WB)
3. Reference accoustic pressure 0dB = 20μPa
4. Sound level will vary depending on a range of factors such as the construction(acoustic absorption coefficient) of particular room in which the equipment in installed.

Model	Sound Pressure Levels dB(A)		
	H	M	L
ARNU09GTR*4	33	31	28
ARNU15GTR*4	37	33	30

ARNU09GTR*4

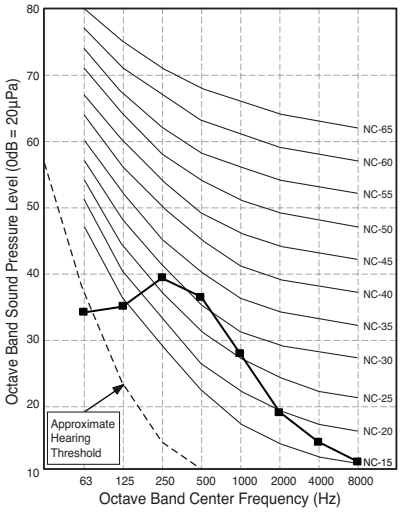

ARNU15GTR*4

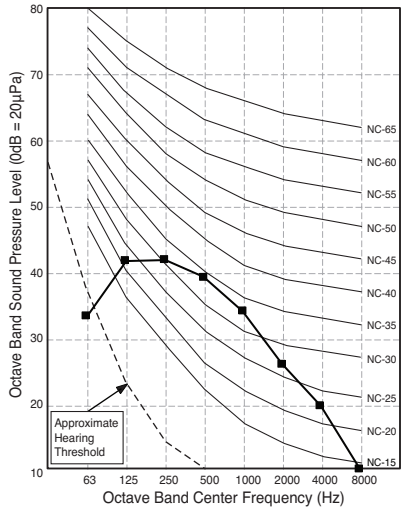

9. Sound Levels

9.2 Sound Power Levels

Model	Sound Power Levels dB(A)
	High Fan Speed
ARNU09GTR*4	51.0
ARNU15GTR*4	55.0

Notes:

- Data is valid at diffuse field condition
- Data is valid at nominal operating condition
- Sound level can be increased in static pressure mode or used air guide.
- Sound power level is measured on the rated condition in the reverberation rooms.
- Sound level will vary depending on a range of factors such as the construction (acoustic absorption coefficient) of particular room in which the equipment in installed.
- Reference acoustic intensity 0dB = 10E-6μW/m²

ARNU09GTR*4

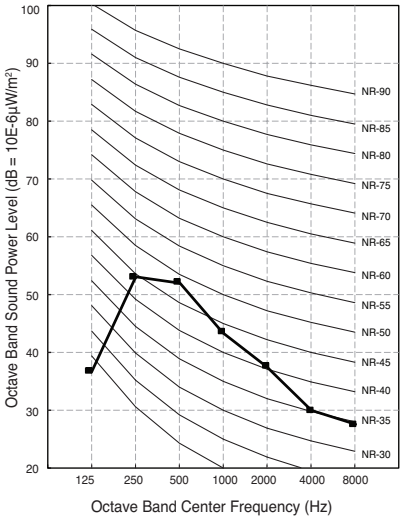

ARNU15GTR*4

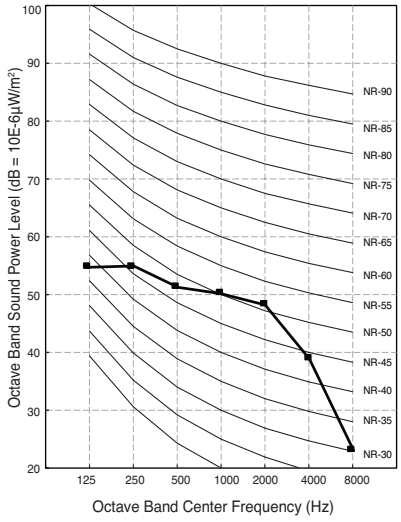

MULTI V™ Indoor unit

Dip Switch & Group Control Setting

1. Cassette, Duct, Ceiling & Floor, Ceiling Suspended, Floor Standing, Console, Fresh Air Intake Unit

1.1 Dip Switch Setting

1.2 Group Control Setting

1.3 2 Remote Control

1.4 Accessories for group control setting

2. Wall Mounted, ART COOL Gallery, ART COOL Mirror

2.1 Master/Slave Setting

2.2 Group Control Setting

2.3 2 Remote Control

2.4 Accessories for group control setting

1.1 Dip Switch Setting

Dip Switch Setting of Indoor unit PCB

	Function	Description	Setting Off	Setting On	Default
SW1	Communication	N/A (Default)	-	-	Off
SW2	Cycle	N/A (Default)	-	-	Off
SW3	Group Control	Selection of Master or Slave	Master	Slave	Off
SW4	Dry Contact Mode	Selection of Dry Contact Mode	Wired/Wireless remote controller selection of Manual or Auto operation Mode	Auto	Off
SW5	Installation	Fan continuous operation	Continuous operation Removal	-	Off
SW6	Heater linkage	N/A	-	-	Off
SW7	Ventilator linkage	Selection of Ventilator linkage	Linkage Removal	Working	Off
	Vane selection (Console)	Selection of up/down side Vane	Up side + Down side Vane	Up side Vane Only	
	Region selection	Selection tropical region	General model	Tropical model	
SW8	Etc.	Spare	-	-	Off

⚠ CAUTION

For Multi V Models, Dip switch 1, 2, 6, 8 must be set OFF.

1.2 Group Control 1

(1) Group Control 1

■ **Wired remote controller 1 + Standard Indoor Units**

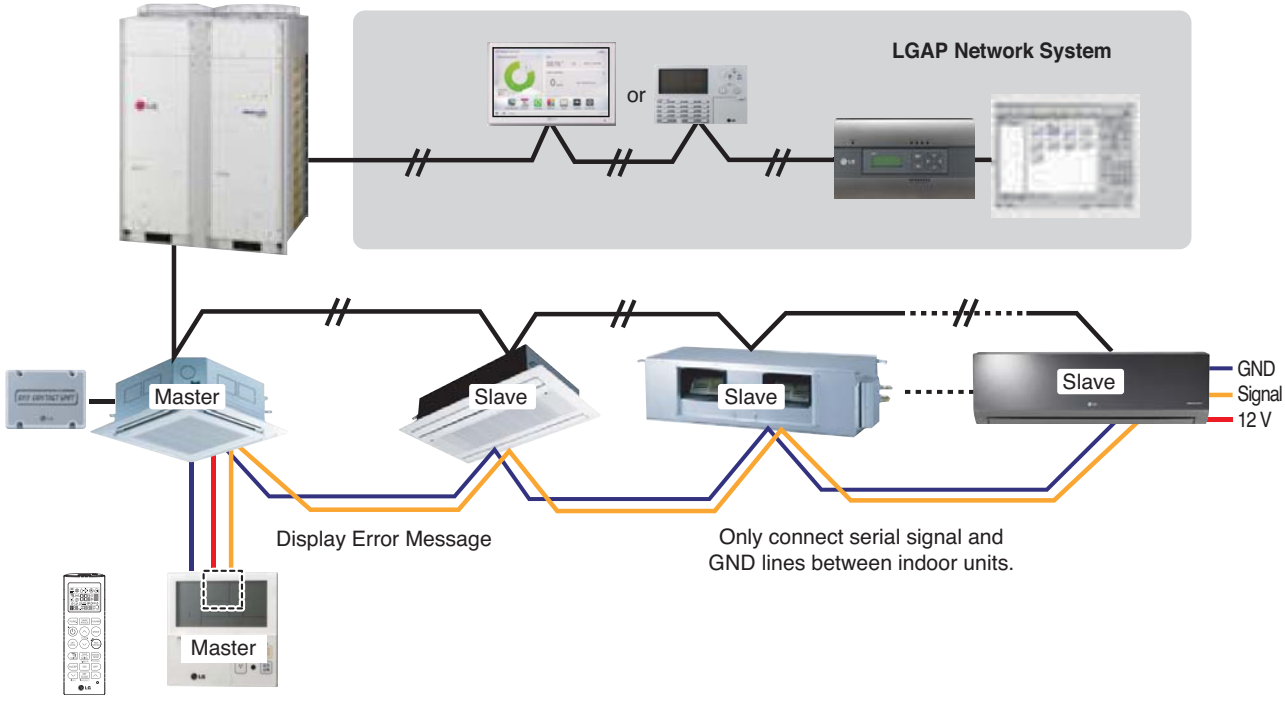

■ **Dip Switch in PCB (Cassette and Duct Type indoor units)**

① **Master Setting**
- No. 3 Off

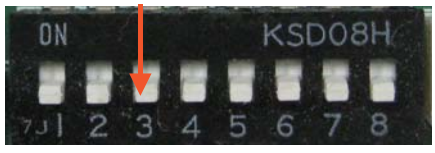

② **Slave Setting**
- No. 3 On

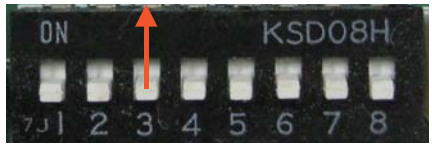

1. It is possible to 16 indoor units(Max) by one wired remote controller.
Set only one indoor unit to Master, set the others to Slave.

2. You can connect all the types of 2nd generation indoor units .

3. It is possible to use wireless remote controller at the same time.

4. It is possible to connect with Dry Contact and Central controller at the same time.
- The Master indoor unit is possible to recognize Dry Contact and Central Controller only.
- In case of Central controller and Group controller at the same time, it is possible to connect standard 2series indoor units or later since Feb. 2009.
- In case of Central controller setting, the Central controller can control indoor units after setting only the address of master indoor unit.
- Slave indoor unit will be operated like master indoor unit.
- Slave indoor unit can not be individually controlled by Central controller.
- Some remote controller can't perform with Dry Contact and Central controller at the same time. So contact us further information about it.

5. In case that the indoor unit has an abnormal problem an error code will be displayed on the wired remote controller.
With the exception of the indoor unit with the error, you can control each indoor unit individually.

6. In case of Group Control, it is possible to use following functions.
- Selection of operation options (operation/stop/mode/set temperature)
- Control of flow rate (High/Middle/Low)
- It is not possible at some functions.

❊ Master/Slave setting of indoor units be set possible using a PCB Dip Switch.

❊ It is possible to connect indoor units since Feb. 2009.
In the other cases, please contact LGE.

❊It can be the cause of malfuctions when there is no setting of master and slave.

(2) Group Control 2

■ Wired remote controllers + Standard Indoor Units

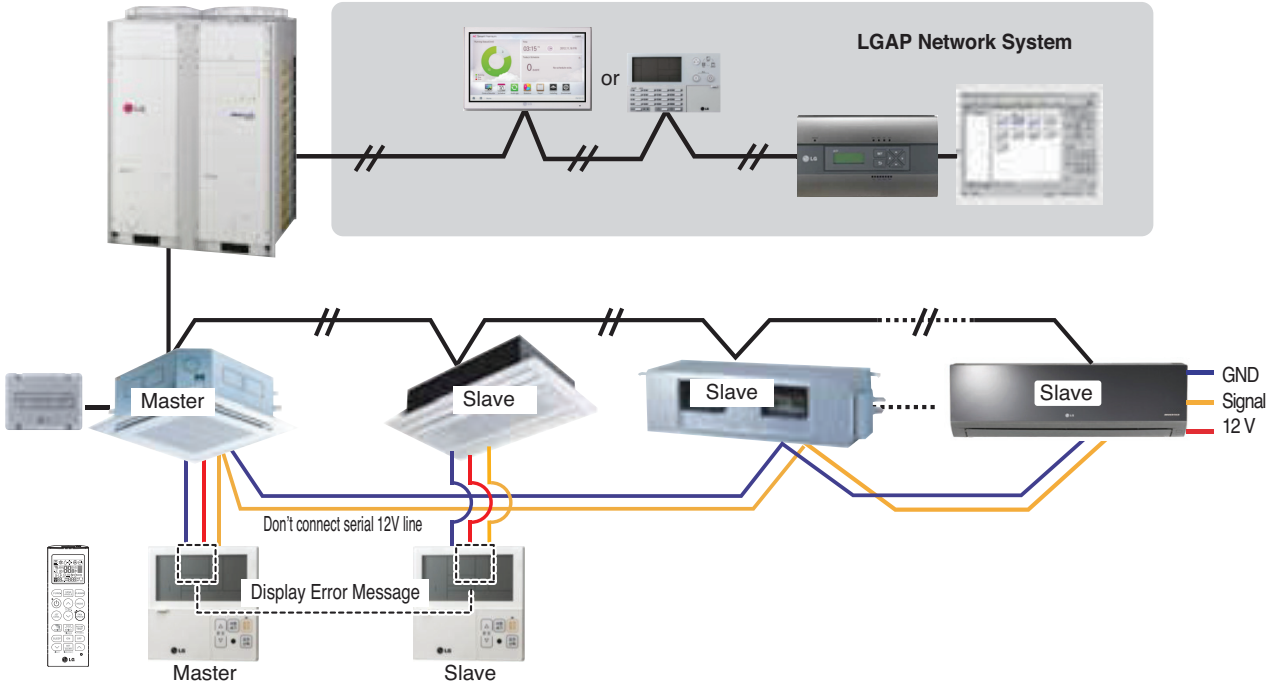

❊ It is possible to control N indoor units by wired remote controller M units. (M+N≤17 Units)
Set only one indoor unit to Master, set the others to Slave.
Set only one wired remote controller to Master, set the others to Slave.
Other than those, it is same with the Group Control 1.

(3) Group Control 3

■ **Mixture connection with indoor units and Fresh Air Intake Unit**

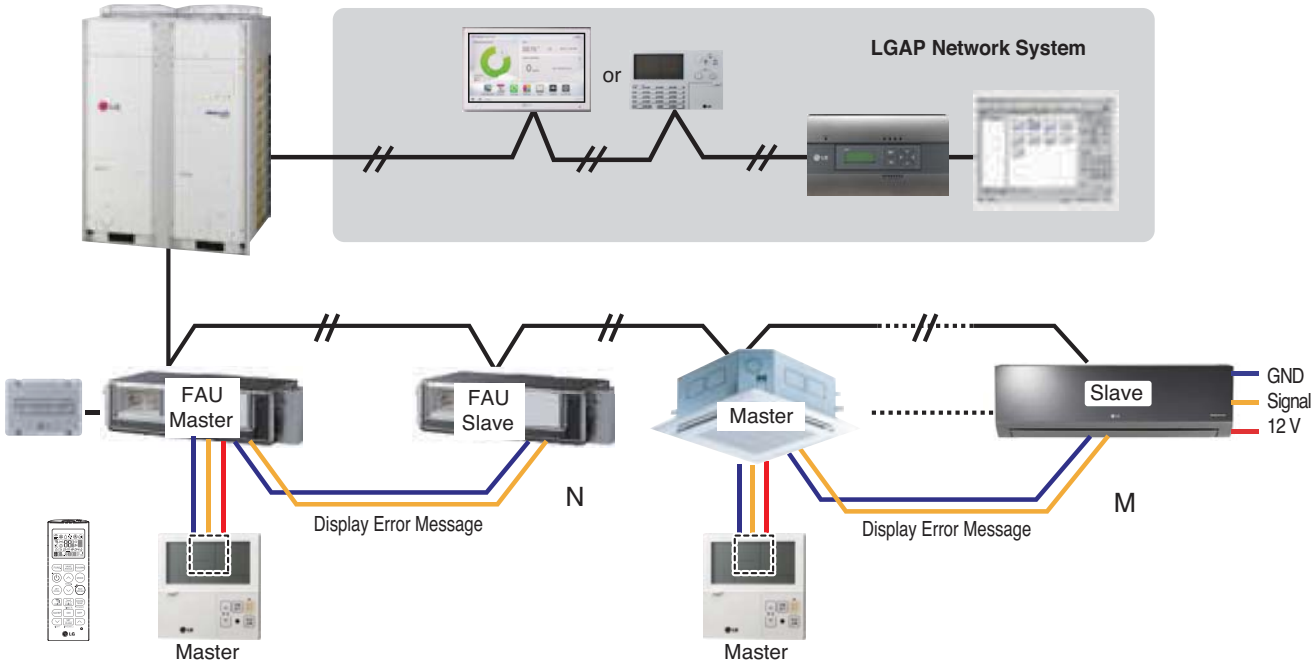

❉ In the case that you connect standard indoor units and Fresh Air Intake Units together, control them separately from each other with different wired remote controllers.

❉ Other than those, it is same with Group Control 1.

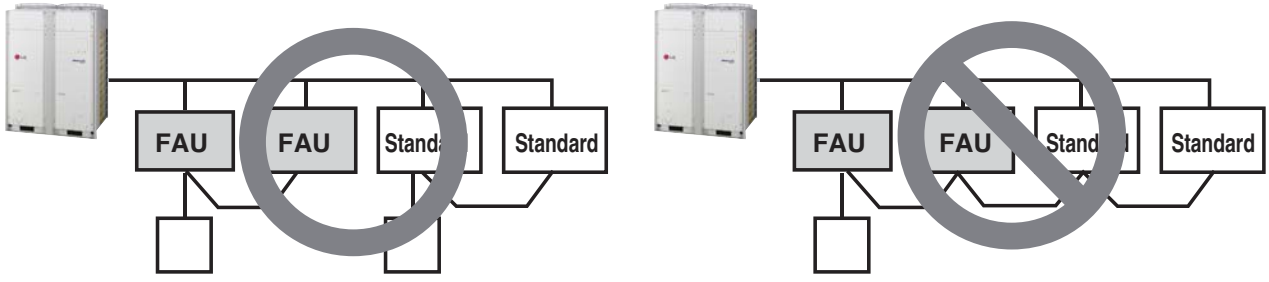

* FAU : Fresh Air Intake Unit
Standard: Standard Indoor Unit

1.3 2 Remote Control

■ **Wired remote controller 2 + Indoor unit 1**

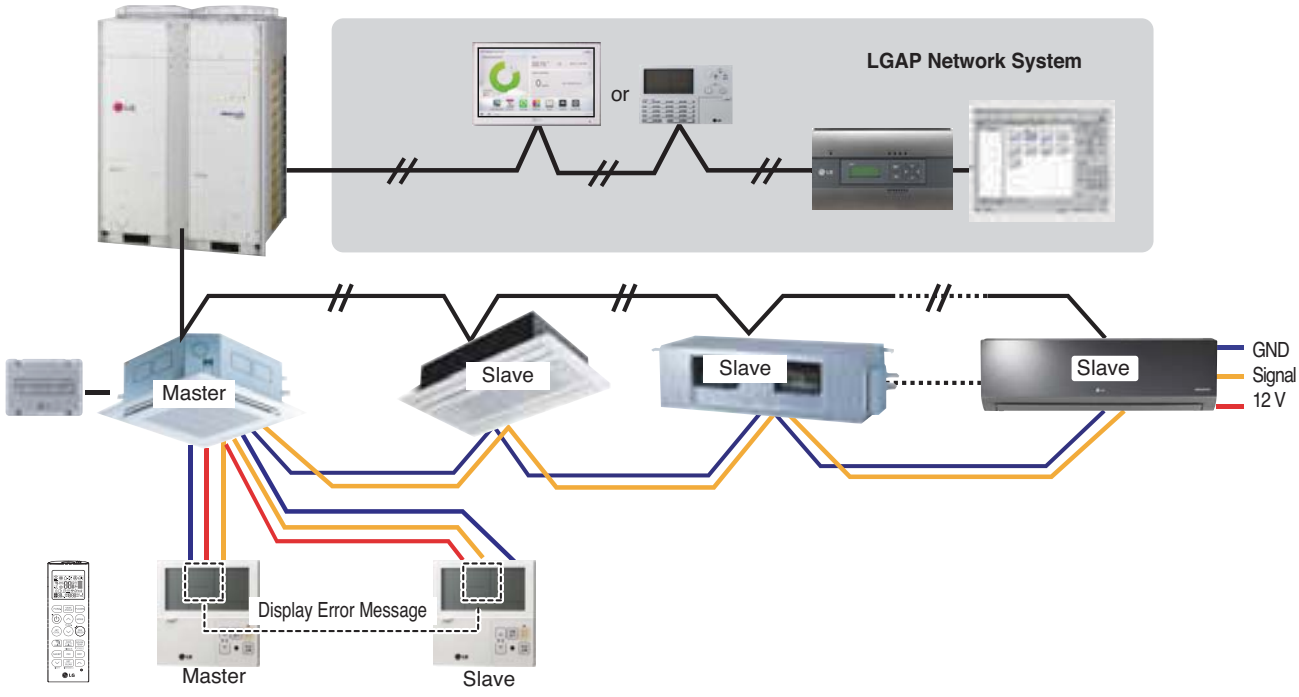

1. **It is possible to connect two wired remote controllers with one indoor unit.**
2. **You can connect any of the types of 2nd generation indoor units to two wired remote controllers.**
3. **It is possible to use wireless remote controller at the same time.**
4. **It is possible to connect with Dry Contact and Central controller at the same time.**
5. **In case that the indoor unit has an abnormal problem an error code will be displayed on the wired remote controller.**
   With the exception of the indoor unit with the error, you can control each indoor unit individually.
6. **There isn't limits of indoor unit function**

❊ Maximum 2wired remote controllers can be connected with 1 indoor unit.

1.4 Accessories for group control setting

It is possible to set group control by using below accessories.

Indoor unit 2 EA + Wired remote controller 1 EA	Indoor unit 1 EA + Wired remote controller 2EA
❊ PZCWRCG3 cable used for connection 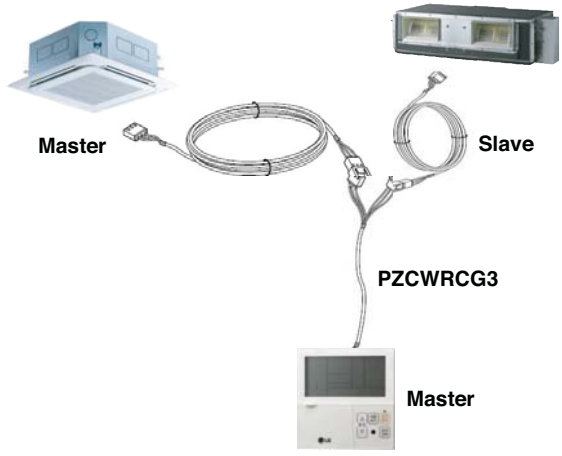	❊ PZCWRC2 cable used for connection 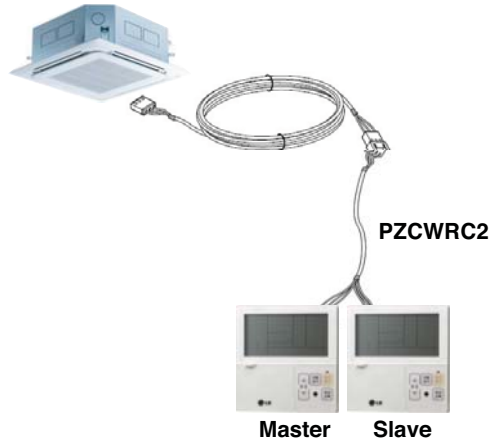

2. Wall Mounted, ART COOL Gallery, ART COOL Mirror

2.1 Master/Slave Setting

⚠CAUTION

Installer setting mode is to set the detail function of the remote controller.
If the installer setting mode is not set correctly, it can cause problems to the product, user injury or property damage. This must be set by an certificated installer, and any installation or change that is carried out by a non-certificated person should be responsible for the results. In this case, free service cannot be provided.

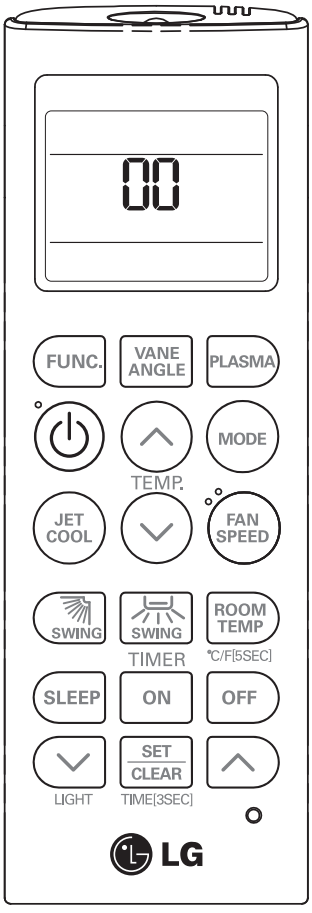

1 When JET COOL button pressed, press RESET button



2 By using the TEMPERATURE SETTING button, set function code and setting value. (Please refer the Installer Setting Code Table.)

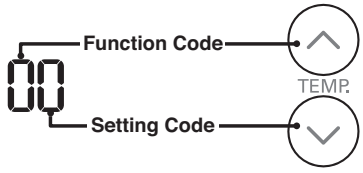

3 Press the ON/OFF button toward the indoor unit 1 time.



4 Reset the remote controller to use the general operation mode.



Installer Setting Code Table

No.	Function	Function Code	Setting Value	Remote Controller LCD
0	Mode Override	0	0 : Set to Master	00
			1 : Set to Slave	01
1	Ceiling Height Selection	1	1 : Standard	11
			2 : Low	12
			3 : High	13
			4 : Super High	14
2	Group Control	2	0 : Set to Master	20
			1 : Set to Slave	21
			2 : Check Master/Slave	22
	Auxiliary heater	2	3 : Set to Auxiliary heater	23
			4 : Cancel Auxiliary heater	24
			2 : Check Auxiliary heater Installation	25

Group Control Setting

- This function is only for group control.
- Please don't set this function in case of non-group control.
- This function is the Master or Slave setting function of indoor unit
- Set only one indoor unit to Master, set the others to slave.
- After setting Group Control of the product, turn off the power then turn it back on after 1 minute.
- Master checking whether the buzzer sounds, such as indoor rings below.
  - ▶ Master: "Beep" (Buzzer sound 1 time)
  - ▶ Slave: "Beep, Beep, Beep, Beep, Beep " (Buzzer sounds 5 times)

Group Control Setting

- This function is only for group control.
- Please don't set this function in case of non-group control.
- This function is the Master or Slave setting function of indoor unit
- Set only one indoor unit to Master, set the others to slave.
- After setting Group Control of the product, turn off the power then turn it back on after 1 minute.
- Master checking whether the buzzer sounds, such as indoor rings below.
  ▶ Master: "Beep" (Buzzer sound 1 time)
  ▶ Slave: "Beep, Beep, Beep, Beep, Beep " (Buzzer sounds 5 times)

2.2 Group Control 1

(1) Group Control 1

■ Wired remote controller 1 + Standard Indoor Units

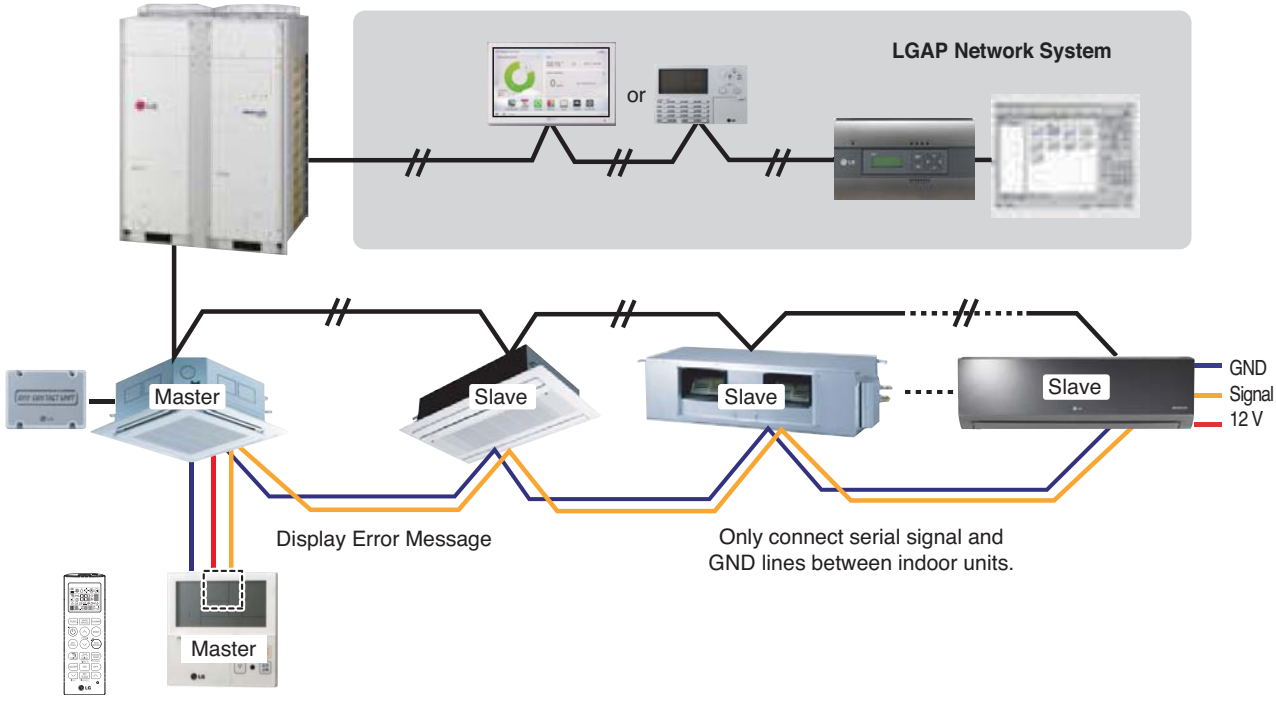

1. It is possible to 16 indoor units(Max) by one wired remote controller.
Set only one indoor unit to Master, set the others to Slave.

2. You can connect all the types of 2nd generation indoor units .

3. It is possible to use wireless remote controller at the same time.

2. Wall Mounted, ART COOL Gallery, ART COOL Mirror

4. It is possible to connect with Dry Contact and Central controller at the same time.

- The Master indoor unit is possible to recognize Dry Contact and Central Controller only.
- In case of Central controller and Group controller at the same time, it is possible to connect standard 2series indoor units or later since Feb. 2009.
- In case of Central controller setting, the Central controller can control indoor units after setting only the address of master indoor unit.
- Slave indoor unit will be operated like master indoor unit.
- Slave indoor unit can not be individually controlled by Central controller.
- Some remote controller can't perform with Dry Contact and Central controller at the same time. So contact us further information about it.

5. In case that the indoor unit has an abnormal problem an error code will be displayed on the wired remote controller.

With the exception of the indoor unit with the error, you can control each indoor unit individually.

6. In case of Group Control, it is possible to use following functions.

- Selection of operation options (operation/stop/mode/set temperature)
- Control of flow rate (High/Middle/Low)
- It is not possible at some functions.

❉ Indoor units be set possible using a wireless remote controller.
This indoor unit be set possible using a wireless remote controller for setting group control.
(type : Wall Mounted, ART COOL Gallery, ART COOL Mirror)

❉ It is possible to connect indoor units since Feb. 2009.
In the other cases, please contact LGE.

❉ It can be the cause of malfuctions when there is no setting of master and slave.

2. Wall Mounted, ART COOL Gallery, ART COOL Mirror

(2) Group Control 2

■ **Wired remote controllers + Standard Indoor Units**

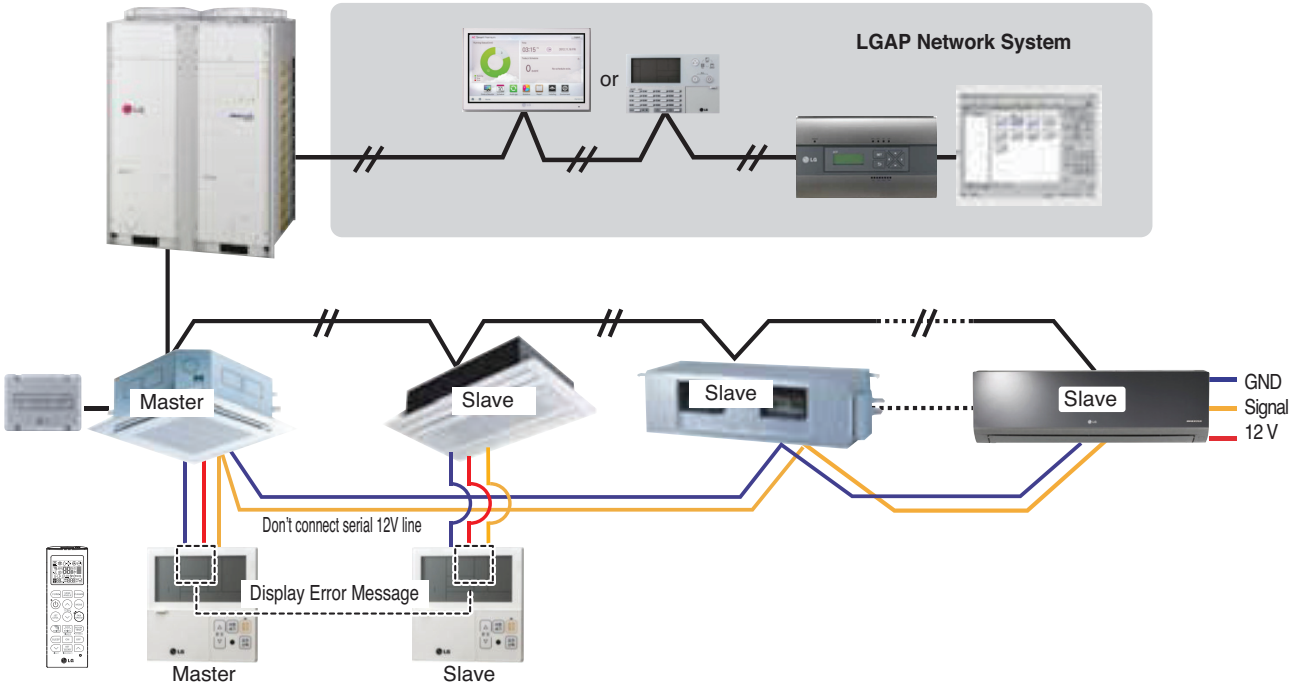

※ It is possible to control N indoor units by wired remote controller M units. (M+N≤17 Units)
Set only one indoor unit to Master, set the others to Slave.
Set only one wired remote controller to Master, set the others to Slave.
Other than those, it is same with the Group Control 1.

(3) Group Control 3

■ **Mixture connection with indoor units and Fresh Air Intake Unit**

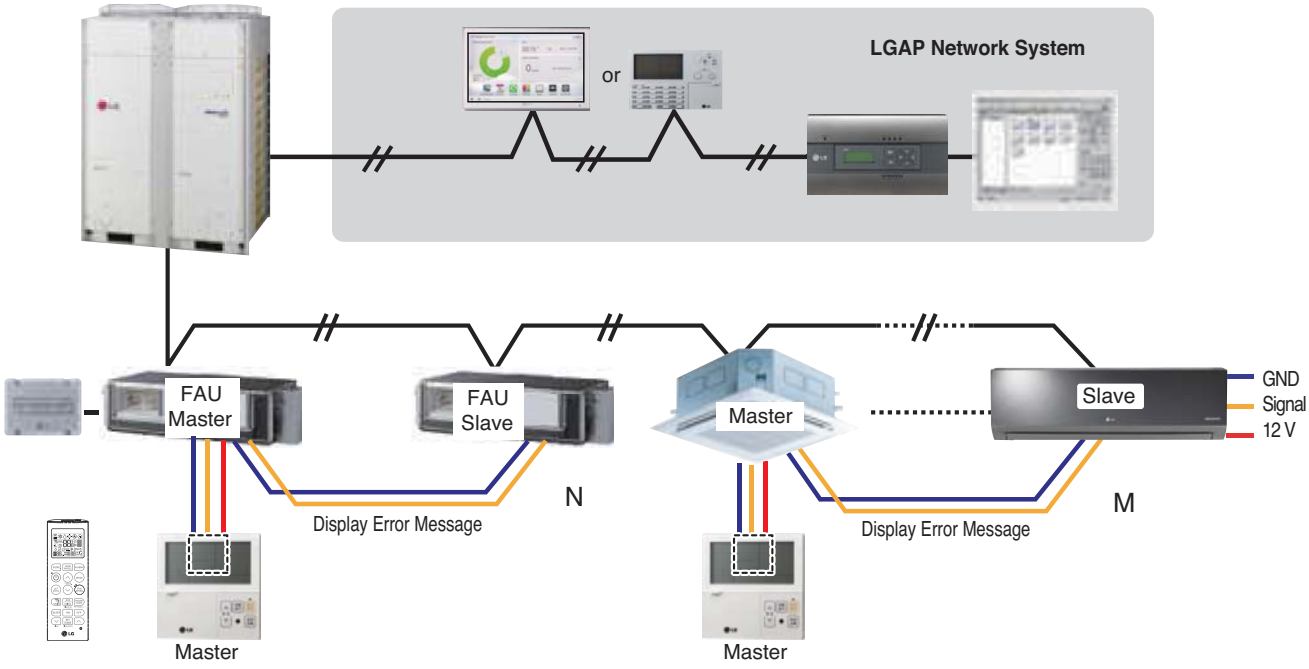

❉ In the case that you connect standard indoor units and Fresh Air Intake Units together, control them separately from each other with different wired remote controllers.

❉ Other than those, it is same with Group Control 1.

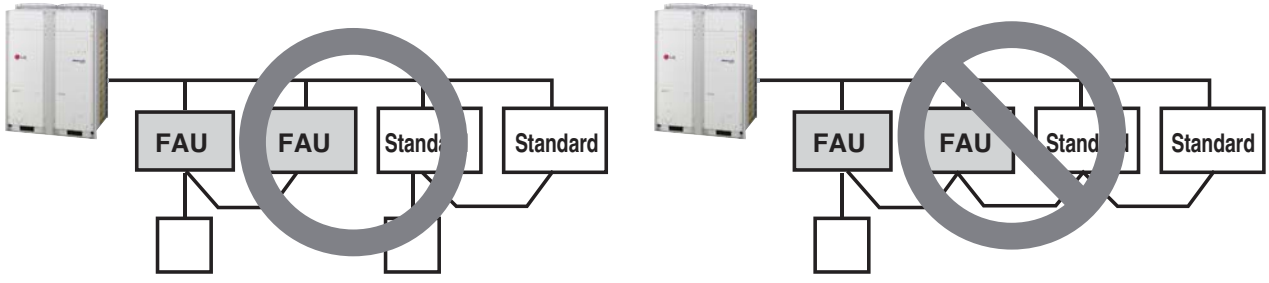

* FAU : Fresh Air Intake Unit
Standard: Standard Indoor Unit

2.3 2 Remote Control

■ **Wired remote controller 2 + Indoor unit 1**

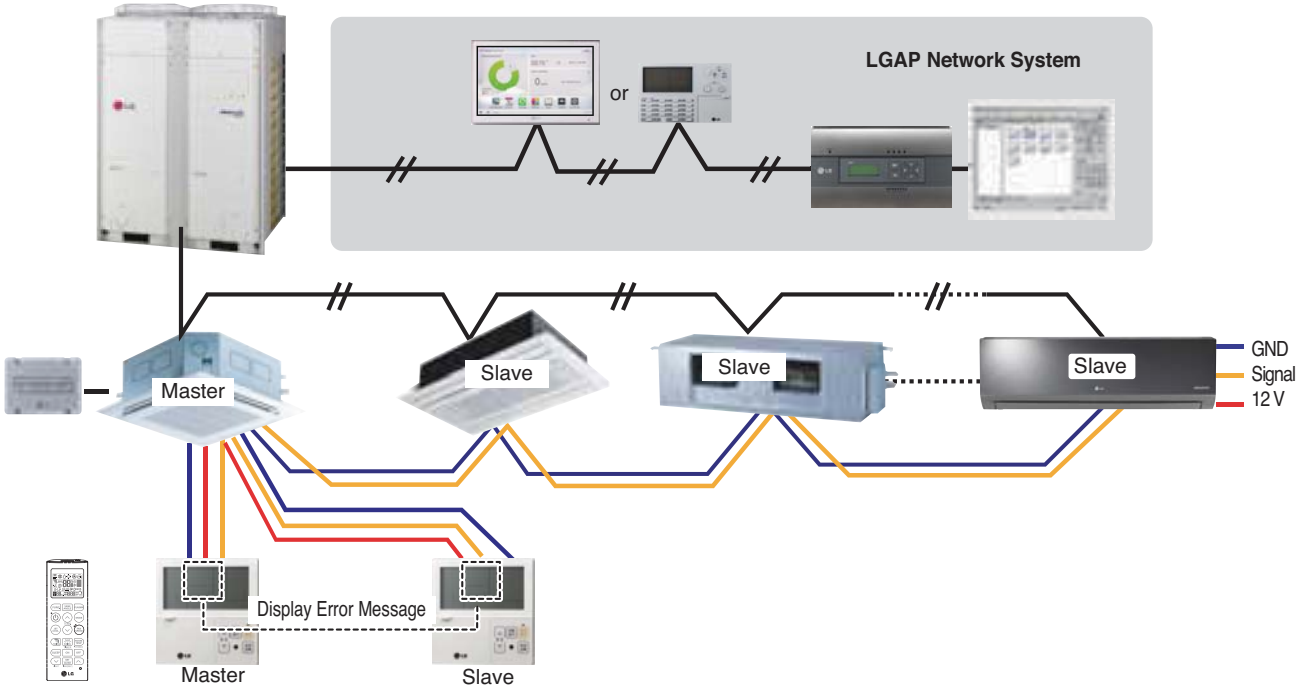

1. **It is possible to connect two wired remote controllers with one indoor unit.**
2. **You can connect any of the types of 2nd generation indoor units to two wired remote controllers.**
3. **It is possible to use wireless remote controller at the same time.**
4. **It is possible to connect with Dry Contact and Central controller at the same time.**
5. **In case that the indoor unit has an abnormal problem an error code will be displayed on the wired remote controller.**
   With the exception of the indoor unit with the error, you can control each indoor unit individually.
6. **There isn't limits of indoor unit function.**

❉ Maximum 2wired remote controllers can be connected with 1 indoor unit.

2.4 Accessories for group control setting

It is possible to set group control by using below accessories.

Indoor unit 2 EA +Wired remote controller 1 EA	Indoor unit 1 EA +Wired remote controller 2EA
❊ PZCWRCG3 cable used for connection 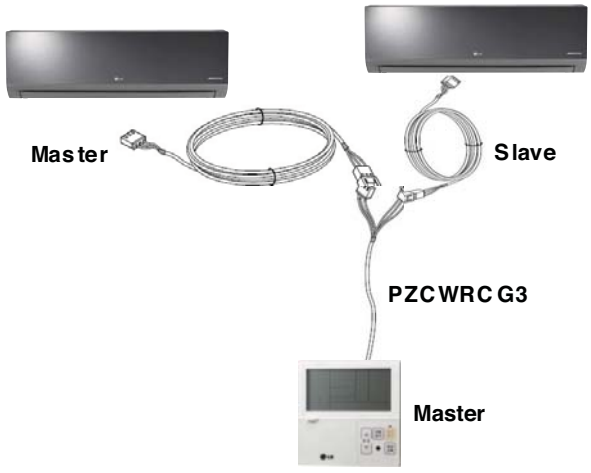	❊ PZCWRC2 cable used for connection 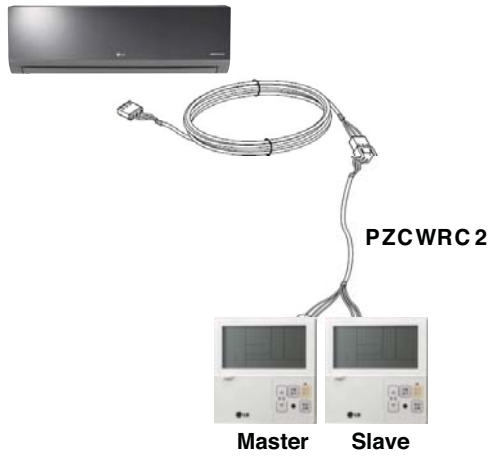

LG
Life's Good

P/No.: MFL55028429

LG Electronics

Air Conditioner
20 Yeouido-dong, Yeongdeungpo-gu,
Yeouido P.O.Box 335 Seoul,
150-721, Korea.
http://www.lgeaircon.com

All rights reserved
Printed in Korea July / 2016
The specifications, designs, and information in this brochure are subject to change without notice.

The air conditioners manufactured by LG have received ISO9001 certificate for quality assurance and ISO14001 certificate for environmental management system.